United States Patent [19]

Huddle

[11] **3,811,454**

[45] **May 21, 1974**

[54] **STRUCTURAL MEMBRANE ATTACHMENT TO AN ARCH**

[75] Inventor: **Carl F. Huddle,** Pleasant Ridge, Mich.

[73] Assignee: **Tension Structures Co.,** Royal Oak, Mich.

[22] Filed: **Dec. 22, 1972**

[21] Appl. No.: **317,509**

[52] **U.S. Cl.** ..... **135/1 R,** 52/63, 160/395

[51] **Int. Cl.** **E04b 1/347**

[58] **Field of Search** 135/1, 3, 4; 52/63; 160/313, 392, 394, 397, 399, 402, 403

[56] **References Cited**

UNITED STATES PATENTS

2,914,776	12/1959	Hotz	160/392
3,187,801	6/1965	Saling	160/392
3,240,217	3/1966	Bird et al.	135/3 R
3,483,879	12/1969	Oehmsen	135/1 R

FOREIGN PATENTS OR APPLICATIONS

2,021,074	11/1970	Germany	52/222

Primary Examiner—Kenneth Downey

[57] **ABSTRACT**

A lightweight tension structure having a multiplicity of arches, strong tensioned membranes attached to and supported by the arches which are anchored to and supported by a common base in such a manner to maintain tension in the membranes and on the attachment of the membranes to the arches. A continuous, structural, weather-tight attachment that can safely transfer the tension forces created in the membranes to the arches, is accomplished by providing a hard beaded membrane edge that is pushed through a continuous arch slot into a recess or cavity adjacent to, and connected to, the arch slot; a lock strip that is inserted into the arch slot to prevent the beaded membrane edge from emerging from the recess when the membrane is tensioned and a retainer at the edge of the slot, or a wedged shape lock strip, to prevent the lock strip from working out of the arch slot.

5 Claims, 13 Drawing Figures

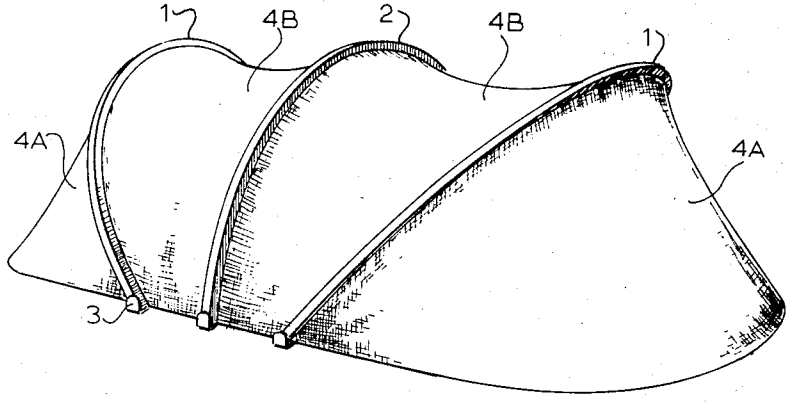

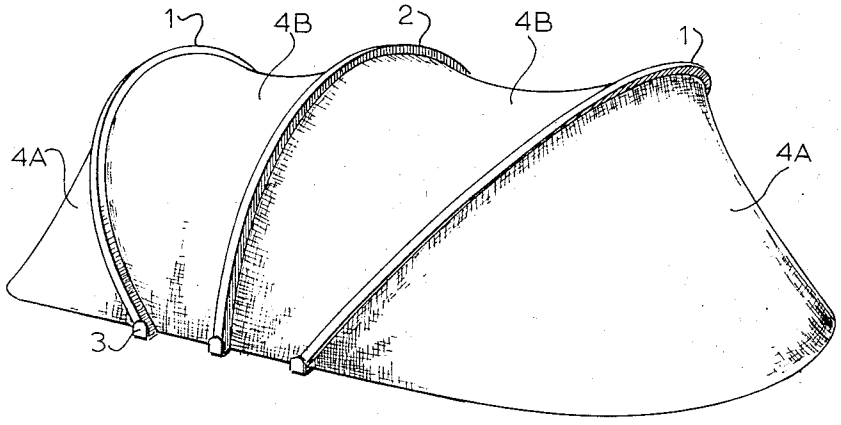

Fig. 1

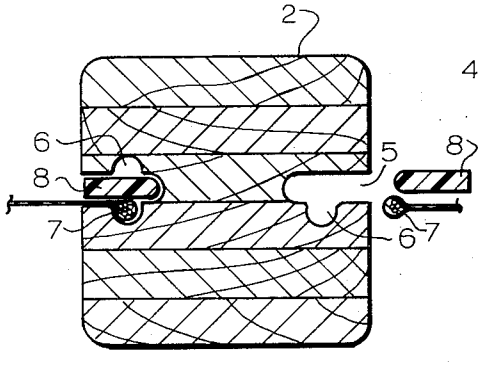

Fig. 2

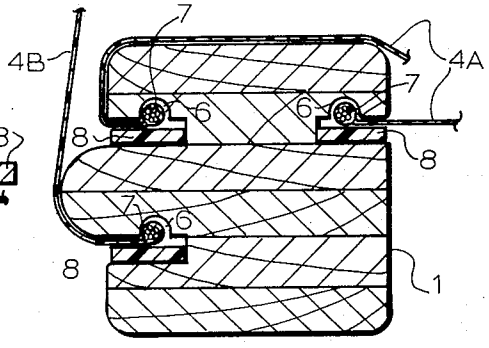

Fig. 3

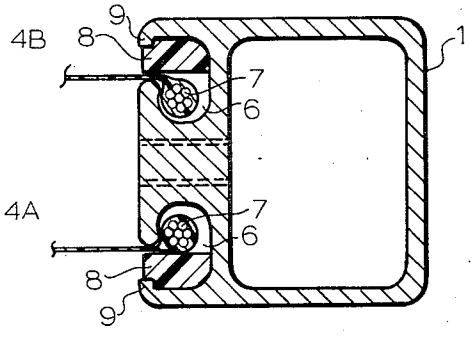

Fig. 4

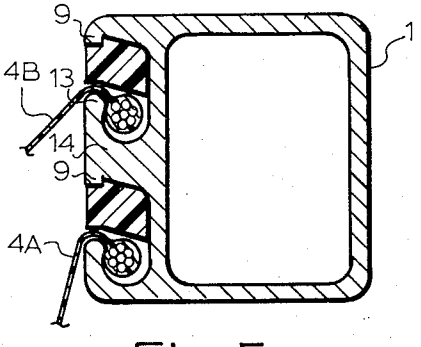

Fig. 5

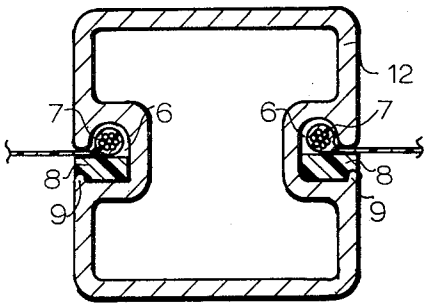

Fig. 6

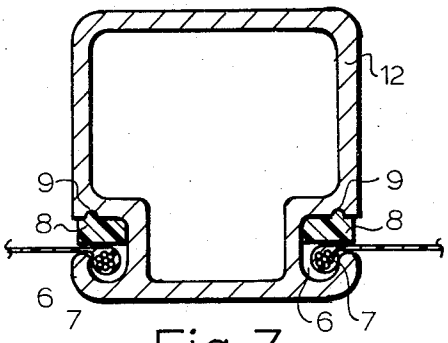

Fig. 7

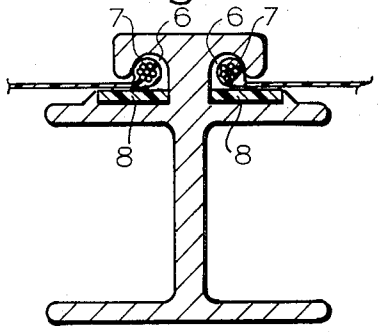

Fig. 8

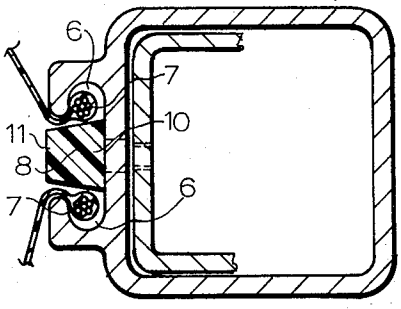

Fig. 9

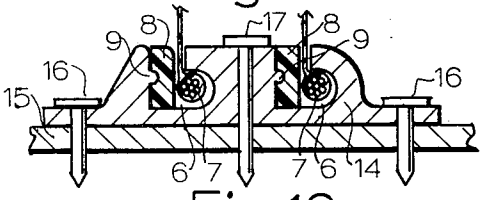

Fig. 10

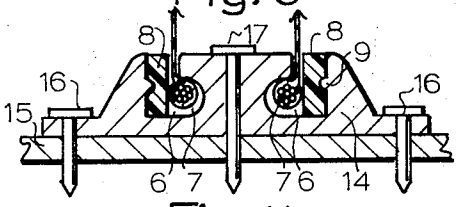

Fig. 11

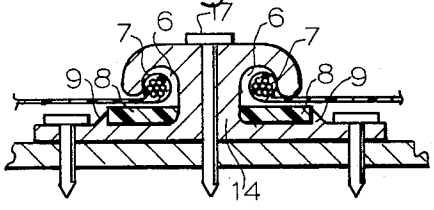

Fig. 12

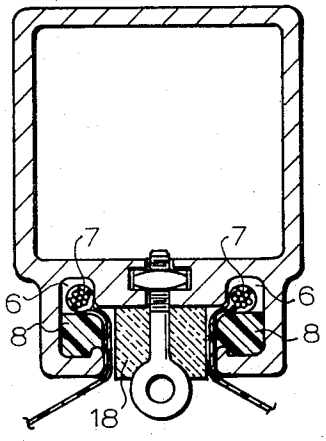

Fig. 13

STRUCTURAL MEMBRANE ATTACHMENT TO AN ARCH

BACKGROUND OF INVENTION

This invention relates to tension structures such as disclosed in my U.S. Pat. No. 3,215,133 dated Nov. 2, 1965; U.S. Pat. No. 3,388,711 dated June 18, 1968 and copending application Ser. No. 93293 dated Nov. 27, 1970. All of these patents and applications are for arch supported lightweight tension shelters having inclined or vertical arches or a combination of both. All of these structures have tensioned membranes of compound curvature for the roof and the end walls, if end walls are used, to partially or fully enclose the structure. This invention is particularly related to a labor saving and cost reducing means by which the membrane can be safely attached to the supporting arches with a weathertight continuous seal. More importantly, by the use of this quick and easy attachment, the membrane serves as a rigid structural component when the arch is curved and the membrane is tensioned sufficiently. This aids in stabilizing the arch to which it is attached and, in some instances, it opposes arch deflections due to the loads imposed on the arch. When end walls that have a double curvature are also used to fully enclose an area, the stability of the structure is a very important characteristic. By this arrangement of continuous attachment, concentrated point stresses are avoided and usually smaller supports can be used. The same effect can be accomplished by a tedious, meticulous lacing system that encloses or captures the arch by this method but fabricating such an enclosure is especially difficult for curved arches and lacing during the assembly period is time consuming and difficult to do without producing wrinkles and an uneven attachment. Also, it is difficult to continuously attach an end wall after or before the roof membrane is attached to an arch. Finally, a weather cap or other means usually must be provided to seal between the roof and end wall membranes. This all adds to the cost of the structure.

By this attachment means, the locking strip can be installed on the inside or outside of the structure; it can be used on vertical center or intermediate arches as well as inclined arches; the membrane can be installed when the arches are reclined on the base before erection. By moving the arches closer together after erection, the membrane edge can be "unlocked" from the arch and a new membrane can be fastened and locked to the arch without disassembling the remainder of the structure.

The lock that prohibits the beaded edge of the membrane from escaping from the continuous arch recess or cavity can be made of a variety of materials as long as they do not compress sufficiently to permit the beaded edge from "pulling out" of the arch slot when the membrane is under tension. Hard rubber-like compositions of plastics or even metal or wood can be used especially when the slot is straight or has a large radius and the lock itself is relatively small in proportion; and-/or the lock is being bent in the plane of its smaller dimension. Some designs can have this characteristic and some require the lock to be bent in it's opposite plane or the lock, of course, can be formed to fit the contour of the arch slot. It also can be extruded or formed to fit various retainer arrangements that keep it from working out of the slot under uneven forces such as produced by variable wind action.

The beaded edge can be easily fabricated by sewing, heat welding or otherwise securing a hard rope or cable in the edge. The size of the beaded edge can be varied for different tensions exerted on the membrane or to insure that the edge will be safely trapped within the continuous cavity. The size of the beaded edge and the compressibility, if any, of the lock strip are factors in each design.

The importance of being able to attach these membranes continuously cannot be over emphasized. When the membranes are tensioned with such an attachment, not only are the forces ideally distributed to the arch with the components of the forces acting somewhat like a continuous webb of a beam, or similar to a plywood truss, the tensioned membranes give great stability to the arch and to the structure.

SUMMARY OF INVENTION

The principal object of this invention is to provide a means by which a tensioned membrane can be continuously and individually attached to an arch, and more importantly, a curved arch without wrinkles or complicated changes in radii to enclose the arch and provide a weathertight seal.

Further objects of this invention are to greatly decrease the labor to attach and detach the membrane from the arch by providing a removable lock that is easy to install and remove, is economical to fabricate and will not work loose due to changes in the stress imposed on the attachment means. No particular skill is needed to attach or detach the membrane, no threaded fasteners are required as the attachment means is incorporated in the arch and the only other component required is the locking strip.

Still another object of this invention is to be able to replace a membrane without disassembly of the structure that has been damaged, or for any other reason. dr

For a better explanation of the components of this invention, their functions and relationship as well as the objects of this invention, the following specifications, accompanying drawings are described along with the preferred embodiments:

BRIEF DESCRIPTION OF THE DRAWINGS

FIG. 1 is a perspective view of an inclined arch structure that is illustrated in a number of my patents and applications that has at least one intermediate or center arch as an added support for the roof membrane.

FIG. 2 is a cross-sectional view of a curved wooden arch in a vertical arch structure shown in this and my parent application.

FIG. 3 has a different position of the fasteners in a wooden arch to produce more friction between the arch and the membrane.

FIG. 4 is a cross-sectional view of an extruded arch that has the membrane attachment extruded in the arch side or perifery that faces the structure.

FIG. 5 is a cross-sectional view with a different arrangement of the removable locks.

FIG. 6 illustrates a rectangular arch cross-section with the membrane attachment near the neutral x axis or on the sides of the arch.

FIG. 7 is a modified cross-section of the FIG. 6 arch, locating the fastener near the lower or upper side of the arch.

FIG. 8 is a modified structural "I" section locating the fastener on the top or bottom of the arch.

FIG. 9 illustrates an arch cross-section having a recess where two membrane edges can be locked to the arch with one lock.

FIG. 10, FIG. 11, and FIG. 12 extruded fasteners attached to arches independently.

FIG. 13 illustrates a cross-section that provides for safety cable attachments and at the same time enables the high tensioned membrane to be attached near the center line of the arch.

DESCRIPTION OF THE PREFERRED EMBODIMENT

The architectural structure shown in FIG. 1 is commonly referred to in this field as a lightweight arch supported tension structure that has, by its inherent design, great stability that is attained by the curved inclined arches and curved center arch (or arches) that are continuously fastened to membranes of double curvature and are tensioned after erection to the degree that the membranes act as rigid structural components. Flexible membranes are now available at reasonable cost that have a tensile strength of 1,500 lbs. per inch. Post tensioning of such strong membranes at 5 to 10 percent of their ultimate strength is possible and practical to give these structures great stability and decrease vibration in their membranes.

The inclined end arches (1) and the center arch (2), which can also be two arches fastened to each other to act as one arch, are pivotably attached to the base (3). Each end membrane (4*a*) and roof membrane (4*b*) on each side of the center support is continuously attached to the arches by a form of this fastening device which will be illustrated in later Figures. These membrane to arch attachments are also applied to structures having a series of vertical or upright arches that also support a tensioned roof that has a double curvature as illustrated in other patent applications.

As in my other patents, these membranes can be strong coated fabrics or weather-tight fabrics alone of fibres or filaments such as glass, wire, polyesters, etc. or flexible membranes of clear plastic, plastic with a scrim reinforcement or other flexible material to suit design conditions and having the quality by which a beaded edge can be formed that is sufficiently large enough to use in this attachment device.

This improved attachment feature is so simple and rugged, it offers a great labor saving advantage in the assembly and as a structural component itself, with these particular structures.

In FIGS. 2 through 13, cross-sections of different arch configurations are shown to illustrate some of the many ways that this attachment can be located in the arch construction or attached to an arch.

In all of these FIGS. 2 through 13, each arrangement has a continuous slot (5) and an offset recess or cavity (6) in the arch into which the beaded edge (7) of the membrane is inserted and then continuously trapped into this cavity (6) by the practically non-compressible, stiff rubber or plastic type material, lock (8) that is prevented from working out of the lock position by a retainer (9), extruded or otherwise formed in the wal towards which the lock presses when the beaded edge attempts to escape from the cavity (6), or recess, in which it is confined.

Where two membrane beaded edges (7) are confined by one lock (8) into a double recess cavity (FIG. 9), the lock (8) has a wedge shape whereby the most inward part (10) of the lock body (8) is thicker than the outer portion (11) to prevent the lock body from creeping outward when assembled as shown. This tapered lock body can be made wide enough at the inward edge to cause such a tight fit that it needs to be forced into position with its inward edge (10) back of the beaded membrane edge (7) so that it will not work out when tension is exerted by the membrane (12) on the beaded edge (7).

Location of the membrane attachment can be a matter of design choice However, if a composite material, such as epoxy resin and fibreglass filaments, are used for the arch in such a configuration as FIG. 6 or 7 whereby the arch (12) is exposed to both the interior of the structure and to the exterior, condensation on the inner surface will not occur as readily as when the arch (12) is made of a highly heat conductive metal such as aluminum.

The surface exposed to the interior of the structure can be used for interior attachments if provision is made in design to do so. While this is more difficult in designs such as FIG. 5 but connections can be made by deleting a small length of the beaded retainer (13) and devising a clamp to attach to the center member (14).

In laminated arch designs such as shown in FIGS. 2 and 3 and in other designs such as FIGS. 6 and 7, interior fasteners are merely a matter of design. Safety cables to hold the arches in position, in the event of a total membrane failure, when the membrane is used without a cable net, other additional supports such as cables, webbing, metal bands, etc, can be attached to and extend between the arches above or below the membrane attachments, if the arches are segmented with slip joints, it is advisible to attach such safety cables at such joints where the inner sleeve aids in distributing the point stress imposed on the arch at the safety cable attachment. Such an arrangement is shown in FIG. 9. In this construction the lock (8) is omitted in the small length where the safety cable is attached to the arch

In FIGS. 10, 11 and 12, the center extruded fastener (14) is fastened to an arch (15) made of any chosen material by quick fasteners (16) and (17) or studs, bolts or by welding it to the arch. Interior fasteners can be included in this construction by designing the center fastener (17) strong enough to take the load imposed on it.

FIG. 13 is a typical extruded arch design whereby the maximum tension stresses at the crown of an inclined arch can be imposed near the center of the arch, in the plane of the arch, to decrease the torque that would be imposed on the arch if these large tension forces were imposed on the edge or side of the arch. This design also provides a space between the roof and end wall fasteners for interior attachments of safety cables between the arches and other attachments. This design is also adaptable for vertical arches. It also has an advantage of having a space between the fasteners that can be filled with thermal insulation (18) to prevent condensation, when the bare metal (of the arch) between the fasteners reaches the dew point of the interior air. This happens when the exterior part of the arch is cooled, causing the temperature to decrease on the part of the arch exposed to the interior and the interior relative humidity is high enough for the portion of the arch exposed to the interior to reach the dew point.

In all these membrane fastener arrangements, the membranes can be attached to the arches before they are erected. When the arches are in a reclined position it is easier in some designs such as FIG. **5** to attach the lower membrane first. In other designs, such as FIG. **4,** it is necessary to work under the membrane to make the lower attachment. In this case it is usually better to raise the arch high enough to gain a good working level to facilitate the attachment of the membrane. These decisions become very important when assembling large structures such as aircraft shelters.

For inclined arches, such as described in some of my patents, membrane attachments similar to **4.5.8,9,10** and **11** cause less torque stress in the arch, while arches such as FIGS. **2, 6** and **7** are better adapted for vertical arches than they are for inclined arches because of torque stresses they would induce in the arch.

Arches such as shown in FIGS. **4, 5, 8, 9, 10, 11** and **12** are preferred to get the arch on the outside of the structure, as a safety precaution in case of a configuration, so the arches could be cooled by water spray to prevent buckling. In all cases except the wooden arches FIGS. **2** and **3** and the structural H-shape arch in FIG. **8,** the arches can be filled with water or act as water mains for a sprinkler or deluge system witout interfering with the sealed off membrane attachments described herein.

Other variations and modifications may be possible and practical within the basic idea of the individual, continuous and dependable membrane attachment to a structural arch such as described herein; however, when strong membranes such as are available today are used as a highly tensioned structural members to form stable roofs and end walls in structures for public occupancy, it is almost imperative to use a dependable, continuous membrane attachment to prevent concentrated or "point" stresses in both the membrane and the arch support to utmost safety in adverse weather conditions.

I claim:

1. A vaulted membrane structure comprised of a multiplicity of arches with curved bights pivotably mounted on a base; a flexible membrane supported by and extending between said arches that is depressed inwardly between the bights of said arches to form a roof of double curvature; said arches being separable, to tension said membrane, and having a mechanical means to hold said arches apart to maintain tension in said membrane, means for attaching said membrane to said arches that includes a continuous slot in the body of said arch, parallel with the length of said arch, a continuous recessed cavity connected to and adjacent to one side of said slot, a beaded edge of said membrane installed in said recessed cavity, and a continuous locking strip installed in said slot that is retained in said slot by means provided in the configuration of said slot and said locking strip.

2. The structure described in claim **1** wherein the configuration on the continuous locking strip comprises a projection along one longitudinal edge thereof.

3. The vaulted structure described in claim **1** except that the means for attaching said membrane to said arches includes a continuous recessed cavity adjacent to and on each side of said slot, a beaded membrane edge installed in each of said recessed cavities, a wedge shaped continuous strip lock installed in said slot between said beaded edges; the arrangement being such that when each beaded edge is placed in each continuous cavity, the wedge shaped strip lock is inserted between beaded edges of said membranes with the widest part of said wedge strip deepest in said slot and the two opposite faces of said wedge strip facing each of the said beaded edges so that when the membranes are tensioned the wedge strip prevents the beaded edges from emerging from said cavities and the wedge shape of the continuous locking strip prevents the locking strip from working out of said arch slot when tension varies in said membrane.

4. The structure described in claim **1** except that sufficient space is provided between multiple membrane attachments to the arch to install mechanical attachments such as safety cables that extend between said arches and other components of these structures.

5. The structure described in claim **4** except that the space between multiple membrane attachments is thermally insulated to prevent the formation of condensation.

* * * * *