(19) Europäisches Patentamt
European Patent Office
Office européen des brevets

(11) EP 0 529 879 B1

(12) **EUROPEAN PATENT SPECIFICATION**

(45) Date of publication and mention of the grant of the patent:
08.05.1996 Bulletin 1996/19

(51) Int. Cl.[6]: **B41J 2/175**, B41J 2/19

(21) Application number: **92307379.5**

(22) Date of filing: **12.08.1992**

(54) **Leak resistant ink-jet pen**
Leckfreies Farbstrahlaufzeichnungsgerät
Enregistreur à jet d'encre étanche

(84) Designated Contracting States:
DE FR GB IT

(30) Priority: **29.08.1991 US 752158**

(43) Date of publication of application:
03.03.1993 Bulletin 1993/09

(73) Proprietor: **Hewlett-Packard Company**
Palo Alto, California 94304 (US)

(72) Inventors:
- **Boyd, Melissa D.**
  Corvallis, OR 97330 (US)
- **Christensen, Kenneth L.**
  Corvallis, OR 97333 (US)
- **Bostater, Julie Jo.**
  Manhattan, KS 66506 (US)

(74) Representative: **Colgan, Stephen James et al**
CARPMAELS & RANSFORD
43 Bloomsbury Square
London WC1A 2RA (GB)

(56) References cited:
EP-A- 0 261 764
EP-A- 0 320 165
US-A- 4 368 478
US-A- 4 931 811

Note: Within nine months from the publication of the mention of the grant of the European patent, any person may give notice to the European Patent Office of opposition to the European patent granted. Notice of opposition shall be filed in a written reasoned statement. It shall not be deemed to have been filed until the opposition fee has been paid. (Art. 99(1) European Patent Convention).

EP 0 529 879 B1

Printed by Rank Xerox (UK) Business Services
2.11.3/3.4

Description

This invention relates to ink-jet pens for use in computer printers.

BACKGROUND AND SUMMARY OF INVENTION

Ink-jet printers are an effective means for printing information and graphics in conjunction with personal computer work stations, for instance. An ink-jet cartridge or pen is the heart of such a printer. The ink-jet pen typically has a reservoir of liquid ink with a conduit supplying the ink to a print head, which is electrically controlled to expel droplets of ink onto an adjacent piece of paper.

A multi-color ink-jet pen includes three reservoirs, each containing an open-cell foam sponge retaining a different color ink. Each reservoir is vented to ambient pressure. A separate conduit connects each reservoir to a print head, which has an array of orifices for expelling each ink color separately. The high capillarity of the foam sufficiently resists ink flow from the reservoir so that a slight backpressure may be established at the print head to prevent ink leakage through the orifices.

During manufacture, while the reservoirs are being filled with ink, air remaining in the conduits is substantially removed by applying suction to the orifices. Nonetheless, it is common for an air bubble to remain in a conduit after this priming process.

Normally, an increase in ambient temperature or decrease in ambient pressure will create some expansion of a trapped air bubble within the conduit. When such expansion occurs, the high-capillarity foam wicks the expanded volume of ink from the conduits back into the reservoirs, thereby preventing leakage from the orifices. This wicking effect occurs as long as there remains a continuous path of ink between the foam and the orifice.

When a large air bubble occupies a conduit, it may interrupt the continuous path of ink required for the foam to prevent leakage. This problem is most likely to occur when a bubble entirely occupies a tubular, vertical standpipe portion of the conduit adjacent to the reservoir, A fine mesh screen between the foam and standpipe prevents the bubble from entering the reservoir, trapping the bubble in the standpipe. The trapped bubble may expand as a result of ambient changes and act as a check valve to block the ink path to the reservoir. Consequently, some of the ink between the bubble and the print head is forced out of the orifices because the foam is unable to wick that volume of ink past the blocking bubble.

When one color of ink leaks out of its orifice, it forms a droplet on the print head surface. The droplet may grow to encounter the orifice of another color, which absorbs it, creating a contaminated mixture. This mixture may be further drawn back into the ink pen when pressure and temperature return to normal. Consequently, proper color printing is spoiled at least until the contaminated ink is spent. The cartridge may be entirely ruined if the contamination is allowed to remain for an extended length of time.

The present invention provides an ink-jet cartridge as specified in claim 1 hereinafter configured to maintain an uninterrupted ink path for transmitting the wicking effect of the foam-filled reservoir through a conduit, even when the conduit is occupied by a significantly large air bubble. A sufficient fluid path to bypass such a bubble is provided by introducing a groove into the conduit configuration. The leakpreventing wicking of the foam-filled reservoir is thereby maintained, since the ink withdraws back into the reservoir along the groove, bypassing the bubble.

US-A-4368478 describes an ink-jet printer which includes a conduit having grooves to enable ink to bypass a trapped bubble. However, the bubble is trapped to prevent its passage to the print head, and not vice-versa as in the present invention. There is no disclosure in this document of a wicking effect which could draw back either a bubble or ink from the print head.

BRIEF DESCRIPTION OF THE DRAWINGS

FIG. 1 is a perspective view of an ink-jet pen apparatus constructed in accordance with the invention.

FIG. 2 is a sectional side view of the apparatus in FIG. 1 taken along line 2-2.

FIG. 3 is a sectional bottom view of the apparatus of FIG. 1 taken along line 3-3 in FIG. 2.

FIG. 4 is a sectional top view of a standpipe taken along line 4-4 in FIG. 2.

FIG. 5 is a sectional side view of a standpipe taken along line 5-5 in FIG. 3.

FIG. 6 is a sectional side view of a standpipe taken along line 6-6 in FIG. 3.

FIG. 7 is a sectional top view taken along line 7-7 in FIG. 6.

DETAILED DESCRIPTION OF A PREFERRED EMBODIMENT

FIG. 1 shows a three-color ink-jet cartridge 10 having a box-shaped body 12 with a bottom plate 14 attached to and substantially coextensive with the bottom surface of the body 12. A print head 20 is attached to the bottom plate 14. The print head defines three sets of print orifices 22 that provide apertures for expelling ink in a controlled pattern during printing. The print head 20 is electronically controlled by a printer (not shown) through a connector circuit 24 mounted on the body 12.

FIG. 2 shows the body 12 defining three similarly sized adjacent ink chambers 26a, 26b, 26c. Each chamber contains a different color ink: cyan, yellow and magenta, for instance. Each chamber is filled with an ink sponge 30a, 30b, 30c formed of open cell foam capable of absorbing and retaining substantial quantities of ink with a wicking effect that tends to draw ink in and prevent ink from leaking out of the sponge.

An open, vertical, generally cylindrical standpipe 32a, 32b, 32c (FIG. 3) is integrally attached to the floor of each chamber, each floor being formed by a base wall 34 of the reservoir body 12. Each standpipe 32a, 32b, 32c forms a conduit for fluid communication between its respective chamber 26a, 26b, 26c and a region outside of the reservoir base wall 34. This external region is a lateral ink channel 38a, 38b, 38c formed cooperatively by the bottom plate 14 and the base wall 34 of the reservoir body 12.

As shown in FIG. 3, the lateral channels 38a, 38b, 38c provide separate conduits to transmit ink from each respective standpipe 32a, 32b, 32c to an associated orifice set in the print head 20.

Each standpipe defines a vertical passage 40a, 40b, 40c. Referring to an exemplary one standpipe 32b (FIG. 2), the upper end 41b of each standpipe is covered by a mesh screen 42. Each screen 42 contacts the respective sponge 30b so that the suction provided by the sponge wicking effect may draw fluid from the passage 40b. Each screen 42 is liquid permeable, but is fine meshed to prevent air bubbles or impurities from passing through. The standpipe passage 40b is terminated at its lower end by a relatively narrow aperture portion 44 in communication with the respective lateral channel 38b.

To provide the fundamental advantages of the invention, the preferred configuration of each standpipe passage 40a, 40b, 40c includes a specially formed interior surface. Again referring to an exemplary standpipe 32b, this surface preferably includes a pair of internal grooves 50, as best shown in FIGS. 4 and 5. Each groove 50 provides a continuous path adjacent to the conduit passage 40b between the reservoir 26b and the lateral channel 38b. This cross-sectional configuration preferably extends the entire length of the standpipe 32b. Similar lateral grooves (not shown) may also be formed longitudinally in the lateral channels 38a, 38b, 38c in communication with the print head 20 to prevent bubble blockage therein.

Preferably, as shown in FIG. 5, all of the lateral channels 38a, 38b, 38c have a rectangular cross-section. Alternatively, any non-circular or other shape that lacks a smoothly rounded interior cross-section may be suitable. The vertex or corner regions along the length of the channels define bypass paths that function to allow fluid flow past a large bubble occupying the lateral channel. The bubble will not expand to entirely occupy the corners, which remain filled with ink to maintain a continuous fluid path between the reservoir 26 and the print head 20.

The primary function of the grooves 50 is to prevent air bubbles from completely blocking the passages 40a, 40b, 40c, thereby completely interrupting the fluid path between the reservoir and the print head. As illustrated in FIGS. 6 and 7, the ink surface tension will prevent an air bubble 60 from completely filling the internal groove 50. To penetrate and fill a gap of width W (FIG. 7), a bubble must have sufficient internal pressure to form a cylindrical bubble having a radius of $r = W/2$ or less. The bubble penetrating the groove is characterized as cylindrical because it would extend along a substantial length of the groove, as shown in FIG. 7. The internal pressure P is the amount by which the bubble pressure exceeds the pressure in the surrounding fluid. For a cylindrical bubble, $P = 4(ST)/r$, where ST is the surface tension of the fluid.

In the range of geometries useful in the instant invention, a bubble will not reach a sufficiently high internal pressure P to fully occupy the groove. Before the critical pressure is reached, the bubble will expand longitudinally within the passage 40 in which it resides.

The preferred embodiment is designed for high surfactant inks with surface tension values in the range of 30.10^{-3} to 35.10^{-3} N/m (30 to 35 dynes/cm). The diameter of the primary passage 40 ranges between 0.24 and 0.41 cm (0.095 and 0.163 inch) as it tapers throughout its height. The grooves 50 preferably have a width of 0.051 cm (0.020 inch), and depths of 0.036 to 0.041 cm (0.014 to 0.016 inch). The depth-to-width ratio of the grooves is greater than one half so that a nearly semicylindrical bubble segment, as would be formed in a limiting case, would not occlude the groove. The groove 50 may be substantially deeper than this limiting ratio, with the added advantage of adequate fluid flow capacity through the groove.

The groove depth is limited only by the dimensions of the pen body 12 in which the grooves 50 are formed. The groove width may be reduced to ensure that even high pressure bubbles will not block the groove, but excessive narrowing will overly constrict the fluid flow through the groove, risking leakage during rapid ambient pressure changes. Extremely narrow grooves are also difficult to manufacture. With the ink formulation used, grooves wider than about 0.102 to 0.127 cm (0.040 to 0.050 inch) are believed to be inadquate, with this width limit varying proportionately with the surface tension properties of alternative inks employed. A wider groove would require smaller sub-grooves or sharp corners to be effective.

Thus, a continuous path of ink is maintained irrespective of bubble expansion. As a result, the wicking effect of the sponges 30 will be maintained for drawing ink through the groove 50, past a bubble in the standpipe passage and back into the chamber 26, so that the ink will not leak in the event of bubble expansion. There is always maintained a small but effective suction or backpressure throughout the conduit in the lateral channels 38a, 38b, 38c leading to the print head 20.

If the conduit lacked the groove feature and were entirely blocked by a bubble, the wicking effect would be blocked, and environmental changes causing expansion of the bubble would drive ink out of the print head 20. Essentially, the bubble would act as a check valve, with any expansion in the chamber forcing ink out of the orifice, as the bubble cannot penetrate the screen, and the ink cannot circumvent the bubble. In the preferred embodiment, ink downstream of the expanding bubble 60 is influenced by the combined effects of the negative

pressure due to wicking by the foam sponge 30 and the neutral pressure of the orifice 22, which resists passage of fluid or air. Thus, the ink is drawn through the capillary groove 50 toward the sponge 30, rather than being forced out of the orifice.

Having illustrated and described the principles of the invention by what is presently a preferred embodiment, it should be apparent to those persons skilled in the art that the illustrated embodiment may be modified without departing from the subject-matter as claimed. For example, the lateral channels may be provided with similar grooves to avoid air bubble blockage therein, and the standpipe interior conduit may be formed in any shape, such as a polygon with corners, to permit capillaries of ink to bypass a substantial air bubble, including a plurality of different size passages for each chamber.

Claims

1. An ink-jet pen cartridge (10) comprising:-
   a body (12) defining a reservoir (26b) for storing ink;
   a print head (20) attached to the body having an orifice (22) for ejecting ink;
   the body defining a conduit (40b,38b) for providing ink flow between the reservoir and the print head;
   the conduit including a first portion (40b) and a contiguous second portion (38b), the first portion including a chamber having an ink inlet (41b) in communication with the reservoir and an ink outlet (44) in communication with the second portion, the second portion being in communication with the print head;
   the chamber in the first portion of the conduit being provided with an elongate groove (50) extending between the ink inlet and the ink outlet;
   the second portion of the conduit being a channel defined at least in part by a pair of elongated surfaces joined at a vertex extending substantially along the length of the second portion;
   means (30b) providing a suction effect between the print head and the reservoir through the conduit to draw ink back from the print head to the reservoir; and
   an ink-permeable barrier (42) attached to the conduit at the ink inlet and positioned between the chamber and the reservoir to prevent an air bubble (60) in the chamber from entering the reservoir.

2. A cartridge according to claim 1 wherein the reservoir (26) is substantially occupied by a foam element (30b) retaining absorbed ink.

3. A cartridge according to claim 2 wherein the foam element (30b) abuts the barrier (42).

4. A cartridge according to any of claims 1 to 3 wherein the groove (50) includes at least a pair of surfaces meeting at a vertex.

5. A cartridge (10) according to any of claims 1 to 4 wherein the groove (50) has opposed, face-to-face parallel surfaces.

6. A cartridge according to any of claims 1 to 5 wherein the second portion of the conduit includes a section extending parallel to a face of the body.

7. A cartridge according to claim 6 wherein the first portion of the conduit extends perpendicularly from the parallel section of the second portion into the reservoir.

Patentansprüche

1. Eine Tintenstrahlkassette (10) mit folgenden Merkmalen:
   einem Körper (12), der einen Behälter (26b) zum Speichern von Tinte definiert;
   einem Druckkopf (20), der an dem Körper befestigt ist, mit einer Öffnung (22) zum Ausstoßen von Tinte;
   wobei der Körper eine Leitung (40b, 38b) zum Liefern eines Tintenflusses zwischen dem Behälter und dem Druckkopf definiert;
   wobei die Leitung einen ersten Abschnitt (40b) und einen angrenzenden zweiten Abschnitt (38b) aufweist, wobei der erste Abschnitt eine Kammer mit einem Tinteneinlaß (41b) in einer Verbindung mit dem Behälter und einen Tintenauslaß (44) in einer Verbindung mit dem zweiten Abschnitt aufweist, wobei der zweite Abschnitt eine Verbindung zu dem Druckkopf aufweist;
   wobei die Kammer in dem ersten Abschnitt der Leitung mit einer länglichen Rille (50) versehen ist, die sich zwischen dem Tinteneinlaß und dem Tintenauslaß erstreckt;
   wobei der zweite Abschnitt der Leitung ein Kanal ist, der zumindest teilweise durch ein Paar von länglichen Oberflächen, die an einem Scheitelpunkt verbunden sind, der sich im wesentlichen entlang der Länge des zweiten Abschnitts erstreckt, definiert ist;
   einer Einrichtung (30b), die eine Saugwirkung zwischen dem Druckkopf und dem Behälter durch die Leitung liefert, um Tinte von dem Druckkopf zurück zu dem Behälter zu ziehen; und
   einer tintendurchlässigen Barriere (42), die an dem Tinteneinlaß an der Leitung befestigt ist und zwischen der Kammer und dem Behälter angeordnet ist, um zu verhindern, daß eine Luftblase (60) in der Kammer in den Behälter eindringt.

2. Eine Kassette gemäß Anspruch 1, bei der der Behälter (26) im wesentlichen durch ein Schaumstoffelement (30b), das absorbierte Tinte zurückhält, ausgefüllt ist.

3. Eine Kassette gemäß Anspruch 2, bei der das Schaumstoffelement (30b) an die Barriere (42) grenzt.

4. Eine Kassette gemäß einem beliebigen der Ansprüche 1 bis 3, bei der die Rille (50) zumindest ein Paar von Oberflächen, die sich an einem Scheitelpunkt treffen, aufweist.

5. Eine Kassette (10) gemäß einem beliebigen der Ansprüche 1 bis 4, bei der die Rille (50) gegenüberliegende, einander zugewandte, parallele Oberflächen aufweist.

6. Eine Kassette gemäß einem beliebigen der Ansprüche 1 bis 5, bei der der zweite Abschnitt der Leitung einen Abschnitt aufweist, der sich parallel zu einer Fläche des Körpers erstreckt.

7. Eine Kassette gemäß Anspruch 6, bei der sich der erste Abschnitt der Leitung senkrecht von dem parallelen Abschnitt des zweiten Abschnitts in den Behälter erstreckt.

Revendications

1. Cartouche (10) pour plume à jet d'encre, comprenant :

un corps (12) définissant un réservoir (26b) destiné à stocker de l'encre ;

une tête d'impression (20) attachée au corps et ayant un orifice (22) pour l'éjection de l'encre ;

le corps définissant un conduit (40b, 38b) destiné à établir un écoulement d'encre entre le réservoir et la tête d'impression ;

le conduit comprenant une première partie (40b) et une deuxième partie (38b), qui y est contiguë, la première partie comprenant une chambre ayant une entrée d'encre (41b) en communication avec le réservoir et une sortie d'encre (44) en communication avec la deuxième partie, la deuxième partie étant en communication avec la tête d'impression ;

la chambre formée dans la première partie du conduit étant munie d'une rainure allongée (50) qui s'étend entre l'entrée d'encre et la sortie d'encre ;

la deuxième sortie du conduit étant un canal défini au moins en partie par une paire de surfaces allongées qui se réunissent à un sommet qui s'étend sensiblement selon la longueur de la deuxième partie ;

des moyens (30b) exerçant un effet d'aspiration entre la tête d'impression et le réservoir à travers le conduit, pour réaspirer l'encre de la tête d'impression vers le réservoir ; et

un écran perméable à l'encre (42) attaché au conduit à l'entrée d'encre et positionné entre la chambre et le réservoir pour empêcher une bulle d'air (60) contenue dans la chambre d'entrer dans le réservoir.

2. Cartouche selon la revendication 1, dans laquelle le réservoir (6) est sensiblement occupé par un élément en mousse (30b) qui retient l'encre absorbée.

3. Cartouche selon la revendication 2, dans laquelle l'élément de mousse (30b) bute contre l'écran (42).

4. Cartouche selon une quelconque des revendications 1 à 3, dans laquelle la rainure (50) comprend au moins une paire de surfaces qui se réunissent à un sommet.

5. Cartouche (10) selon une quelconque des revendications 1 à 4, dans laquelle la rainure (50) possède des surfaces parallèles opposées face à face.

6. Cartouche selon une quelconque des revendications 1 à 5, dans laquelle la deuxième partie du conduit comprend une section s'étendant parallèlement à une face du corps.

7. Cartouche selon la revendication 6, dans laquelle la première partie du conduit s'étend perpendiculairement à partir de la section parallèle de la deuxième partie, en s'engageant dans le réservoir.

FIG. 1

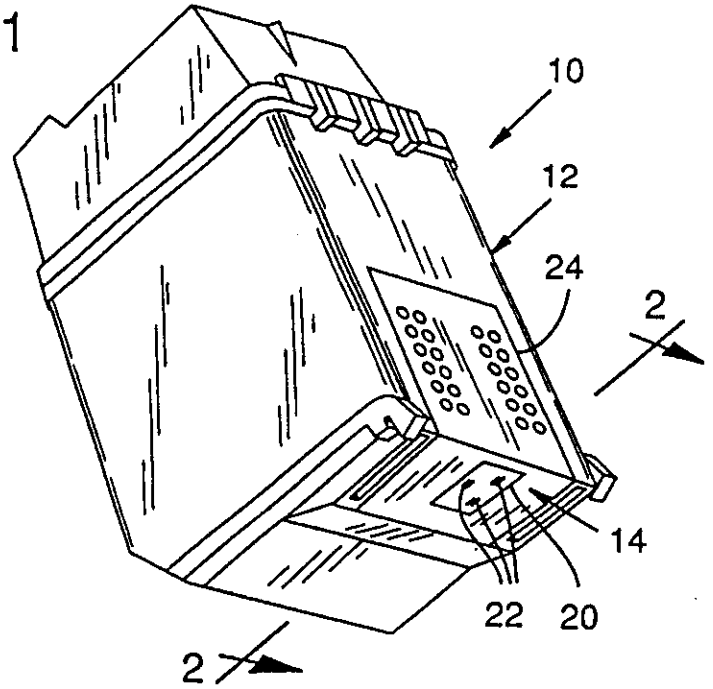
10
12
24
2
14
22
20
2

FIG. 2

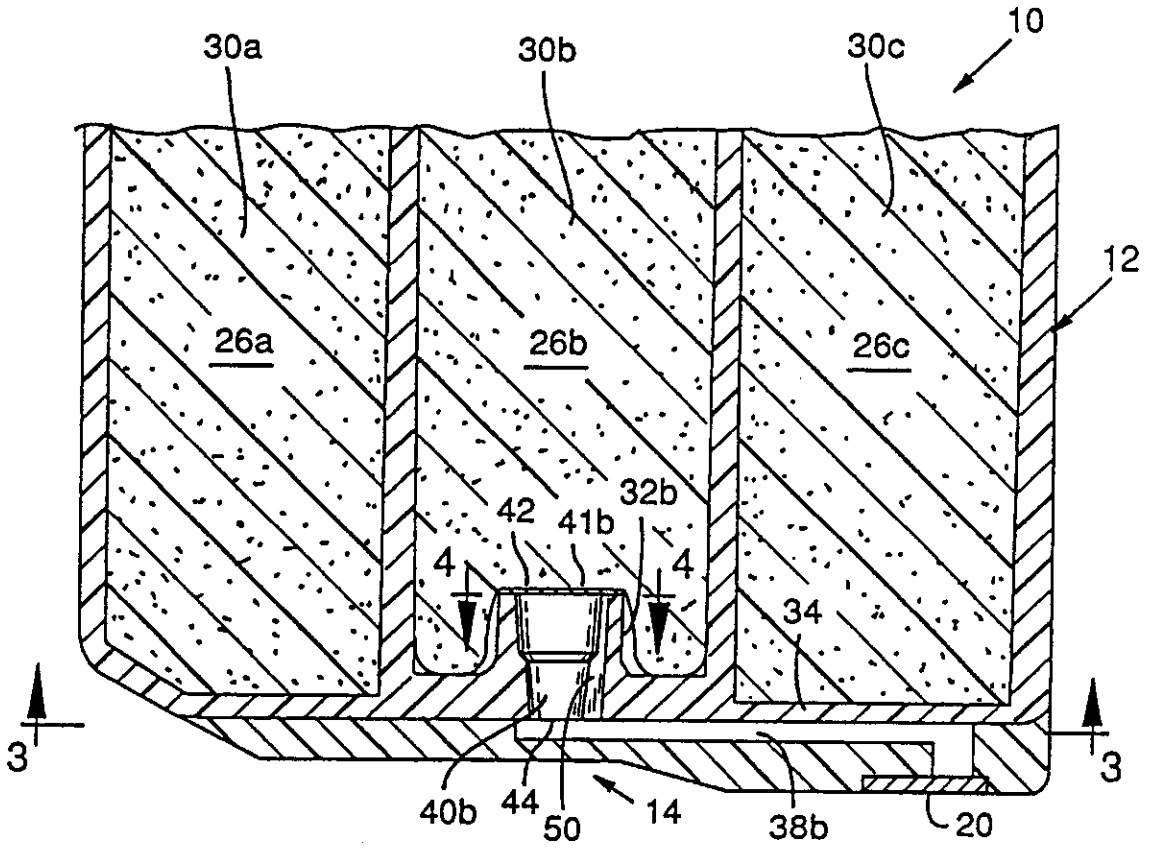
30a
30b
30c
10
12
26a
26b
26c
42
41b
32b
4
4
34
3
3
40b
44
50
14
38b
20

FIG. 3

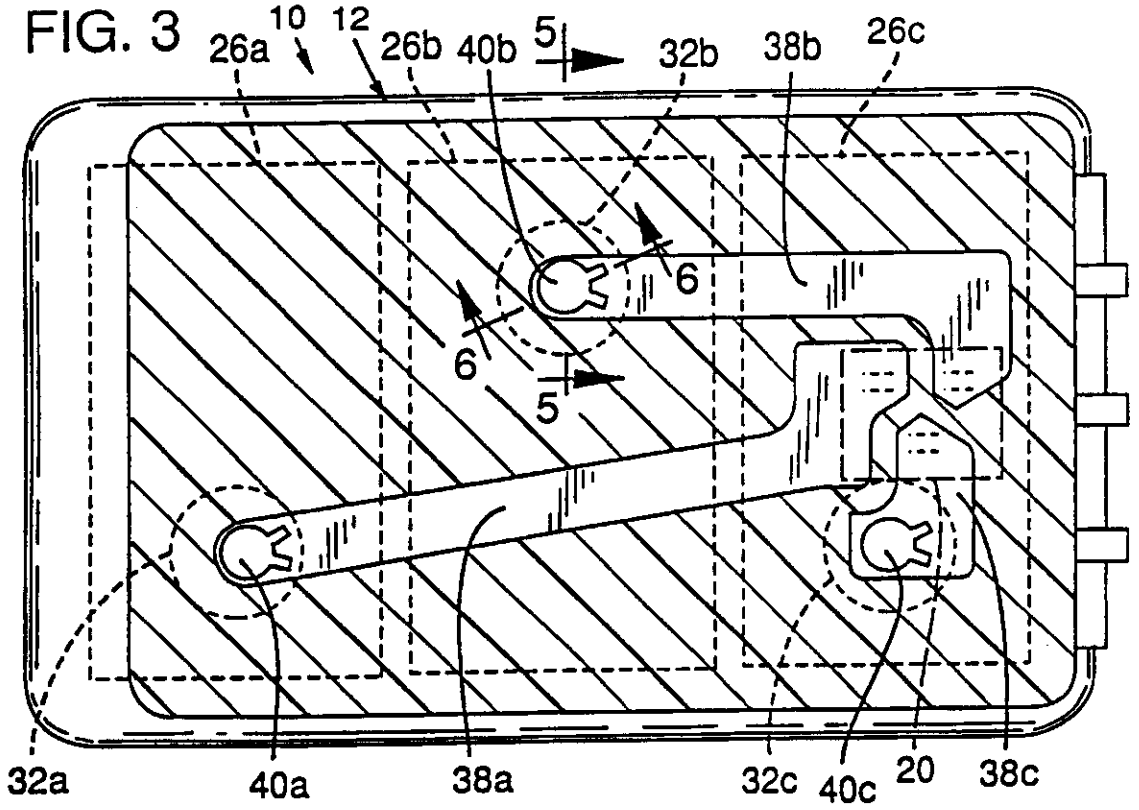

FIG. 4

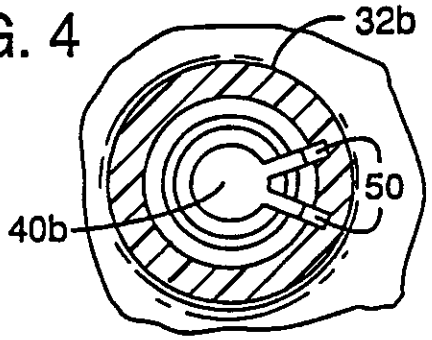

FIG. 7

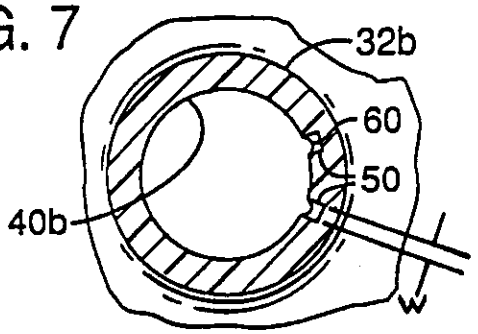

FIG. 5

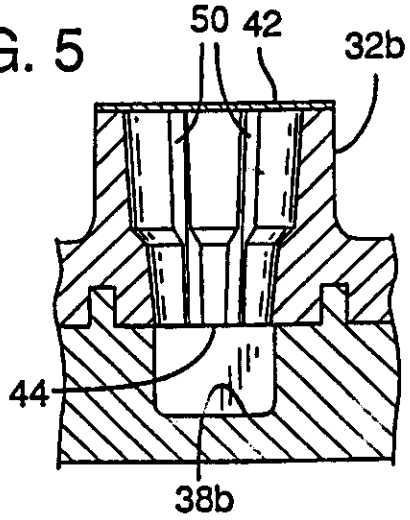

FIG. 6

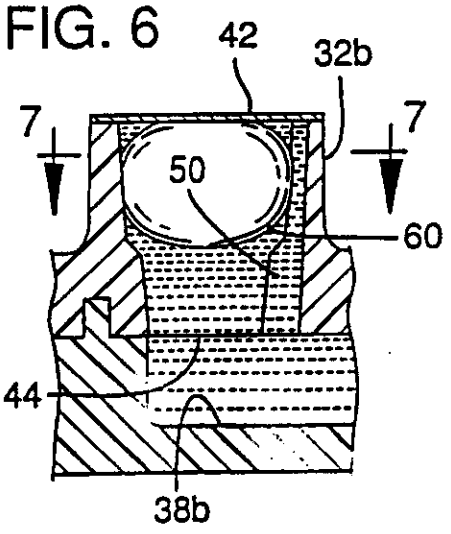

REGISTER ENTRY FOR EP0529879

European Application No EP92307379.5 filing date 12.08.1992

Priority claimed:
29.08.1991 in United States of America - doc: 752158

Designated States DE FR GB IT

Title LEAK RESISTANT INK-JET PEN.

Applicant/Proprietor
HEWLETT-PACKARD COMPANY, 3000 Hanover Street, Palo Alto, California 94304, United States of America [ADP No. 50014570004]

Inventors
MELISSA D. BOYD, 1141 NW Charlemagne Place, Corvallis, OR 97330, United States of America [ADP No. 59307082001]

KENNETH L. CHRISTENSEN, 25061, Decker Road, Corvallis, OR 97333, United States of America [ADP No. 60626082001]

JULIE JO. BOSTATER, 307 Van Zile, Manhattan, KS 66506, United States of America [ADP No. 60626090001]

Classified to
B41J

Address for Service
CARPMAELS & RANSFORD, 43 Bloomsbury Square, LONDON, WC1A 2RA, United Kingdom [ADP No. 00000083001]

EPO Representative
STEPHEN JAMES COLGAN, CARPMAELS & RANSFORD 43 Bloomsbury Square, London WC1A 2RA, United Kingdom [ADP No. 50906551001]

Publication No EP0529879 dated 03.03.1993
Publication in English

Examination requested 09.08.1993

Patent Granted with effect from 08.05.1996 (Section 25(1)) with title LEAK RESISTANT INK-JET PEN

**** END OF REGISTER ENTRY ****

RENEWAL DETAILS

PUBLICATION NUMBER EP0529879

PROPRIETOR(S)

Hewlett-Packard Company, 3000 Hanover Street, Palo Alto, California 94304, United States of America

see (1)'

DATE FILED 12.08.1992

DATE GRANTED 08.05.1996

DATE NEXT RENEWAL DUE 12.08.1997

DATE NOT IN FORCE

DATE OF LAST RENEWAL 24.07.1996

YEAR OF LAST RENEWAL 05

STATUS PATENT IN FORCE

**** END OF REPORT ****