(No Model.)

2 Sheets—Sheet 1.

C. F. STACKPOLE.

SOLE EDGE BURNISHING MACHINE.

No. 585,292. Patented June 29, 1897.

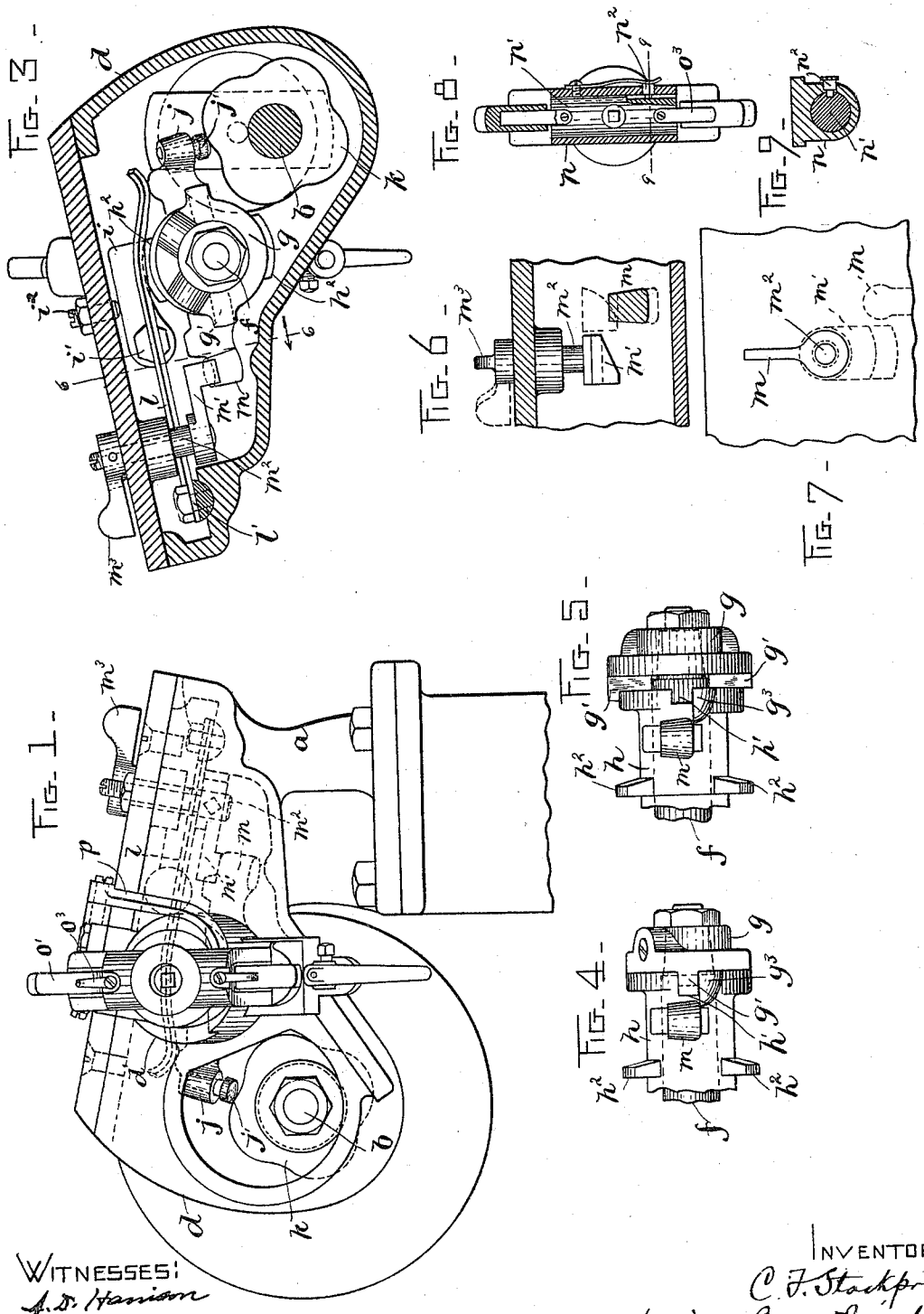

WITNESSES:
A. D. Harrison
P. W. Pezzetti

INVENTOR:
C. F. Stackpole
by Wright Brown & Quinby
Attys.

THE NORRIS PETERS CO. PHOTO-LITHO., WASHINGTON, D. C.

(No Model.) 2 Sheets—Sheet 2.

C. F. STACKPOLE.

SOLE EDGE BURNISHING MACHINE.

No. 585,292. Patented June 29, 1897.

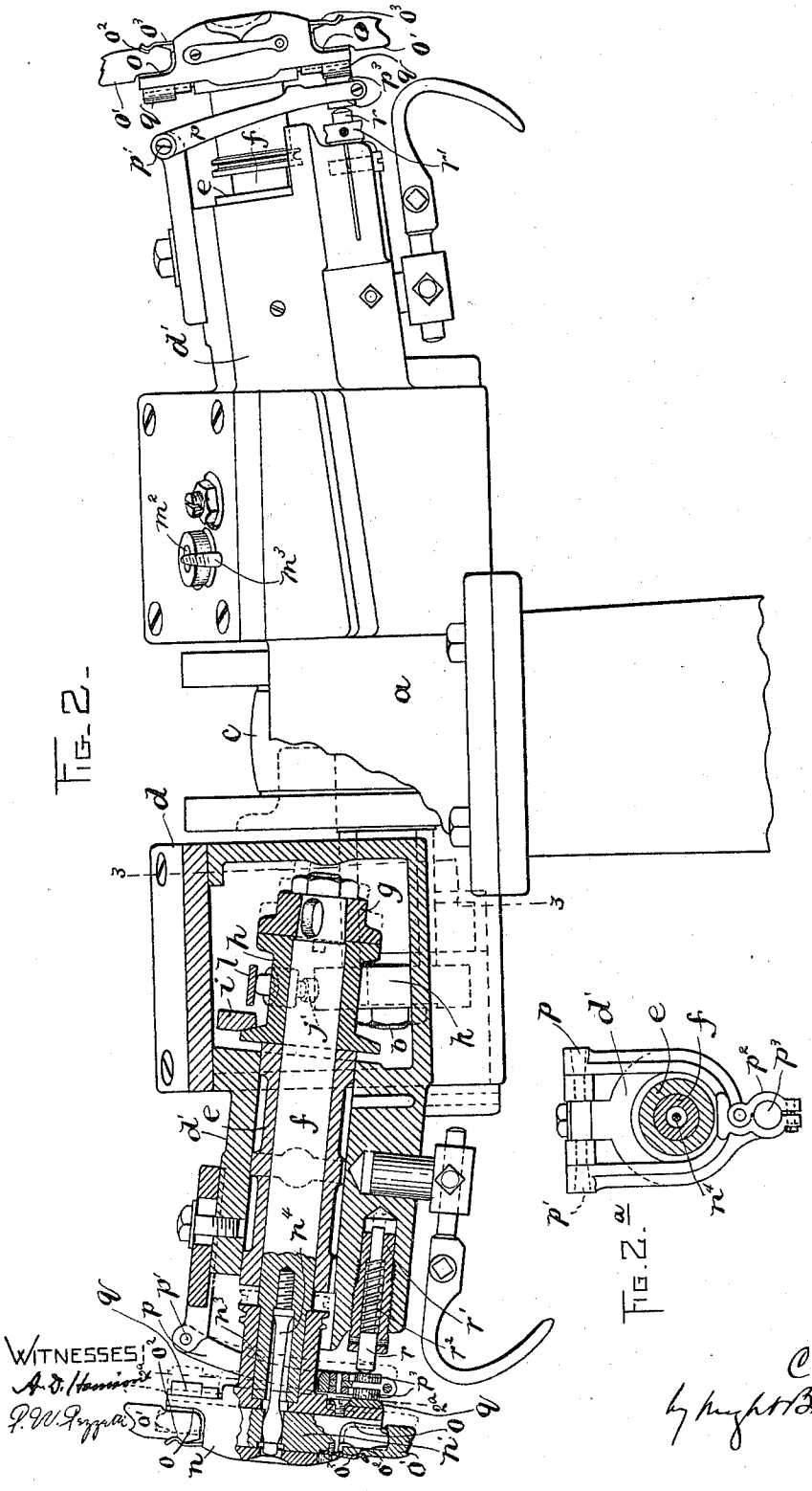

FIG. 2.

FIG. 2a.

WITNESSES:
A. D. Harrison
F. W. Zappa

INVENTOR:
C. F. Stackpole
by Wright Brown Quinby & Otts.

THE NORRIS PETERS CO., PHOTO-LITHO., WASHINGTON, D. C.

UNITED STATES PATENT OFFICE.

CHARLES F. STACKPOLE, OF LYNN, MASSACHUSETTS.

SOLE-EDGE-BURNISHING MACHINE.

SPECIFICATION forming part of Letters Patent No. 585,292, dated June 29, 1897.

Application filed May 25, 1896. Serial No. 592,926. (No model.)

To all whom it may concern:

Be it known that I, CHARLES F. STACKPOLE, of Lynn, in the county of Essex and State of Massachusetts, have invented certain new and useful Improvements in Sole-Edge-Burnishing Machines, of which the following is a specification.

This invention relates to machines for burnishing the edges of boot and shoe soles, and has particular reference to that type of burnishing-machine in which the tool is given an oscillating movement.

The invention has for its object to provide a simple, durable, and efficient machine, preferably of the type known as "twin machine," and one in which the head is provided with two tools, either one of which may be brought into position to be used; and a further object of the invention is to provide means for heating the burnishing-tool by means of friction-producing devices.

To these ends the invention consists in the construction and combination of parts substantially as hereinafter described and claimed.

Of the accompanying drawings, forming a part of this specification, Figure 1 represents an end elevation of a machine embodying the invention. Fig. 2 represents a side elevation of the casing, and parts of the mechanism at one end of the twin machine being represented in section. Fig. 2^a represents a section on line 2^a 2^a of Fig. 2. Fig. 3 represents a section on line 3 3 of Fig. 2, looking in the direction of the arrow. Fig. 4 represents a detail plan view of the sleeve through which the rear end of the oscillating shaft passes. Fig. 5 is a similar view representing the clutch as open. Fig. 6 represents a detail section on line 6 6 of Fig. 3. Fig. 7 represents a detail plan of that portion of the arm or frame of the machine indicated in Fig. 6. Fig. 8 represents a detail end view of the carrier or head for the burnishing-tools. Fig. 9 represents a section on line 9 9 of Fig. 8.

Similar reference-letters indicate the same parts throughout the several views.

In the drawings, *a* represents a standard which supports the bearings for a driving-shaft *b*, provided with a pulley *c*. Secured to the standard, in opposite sides thereof, are two extension frames or casings, which support a burnishing mechanism, as will be now described, reference to one being sufficient, without describing the other, it being understood, of course, that the parts are duplicates of each other on each side of the standard.

d represents a casing or chamber having a tubular extension *d'*, in which is secured a bearing *e* for the oscillating shaft *f*. This shaft *f* has rigidly secured to its inner end a collar *g*, which is provided with a radial rib *g'*, (see Figs. 4 and 5,) said rib being adapted to enter a groove *h'*, formed in a sleeve *h*, which is loose on said shaft, it being understood that this groove *h'* extends entirely across the end of sleeve *h*. At the opposite end the sleeve *h* fits closely against the inner end of the bearing *e*, and it is held in this position by means of a latch or arm *i*, pivoted at *i'* to the casing (see Fig. 3) and provided with a beveled end, as shown in Fig. 2, adapted to bear against a beveled shoulder h^2 of the sleeve *h*. A screw, as at i^2, may be employed to adjust the pressure of the latch against said beveled shoulder h^2.

The sleeve *h* is provided with an arm *j*, provided with a bearing-piece *j'*, adapted to ride on the quadruplex cam *k*, secured to the end of the shaft *b*, and a spring *l*, secured in the casing, as at *l'*, bears with its outer end upon said arm *j* and forces the piece *j'* into contact with the cam. On the opposite side of the sleeve *h* is an arm *m*, against which an arm *m'* is adapted to be turned by means of a spindle m^2 and handle m^3, the end of the arm *m'* being beveled, as indicated in Fig. 6, so that when said spindle m^2 is turned to carry the arm *m'* from the position shown in solid lines in Fig. 6 to the position indicated in dotted lines it will depress the arm *m* and oscillate the sleeve, so as to lift the piece *j'* away from the cam and render the machine inoperative, or, in other words, to throw out of action the burnishing-tools at that end of the machine, while the shaft *b* is still in motion.

Owing to the fact that the shaft *f* is free to move longitudinally in the bearing *e* and sleeve *h*, it will be readily understood that if said shaft *f* be pressed inward, so as to disengage the rib *g'* from the groove *h'* of the sleeve, the said shaft may be given a half-rotation, and then by means of a suitable spring, as hereinafter described, the shaft

will be carried back to the position shown in Fig. 2 and the clutch formed by the members g and h will again be coupled, so that the shaft f will partake of the oscillating movements of the sleeve h under the operation of the cam.

Secured on the outer end of the shaft f is a burnishing-tool head n. (See Figs. 1, 2, 8, and 9.) This head is provided with a vertical cylindrical bore to receive a slide n', which is provided with a longitudinal groove adapted to receive a spring-pressed pin n^2 to prevent said slide from rotating in the head. The end of the shaft f is recessed, as at n^3, to receive a spring n^4, secured at the inner end of said recess, said recess being large enough to permit the spring to have a slight lateral play therein. The end of the spring is fitted to a central bore in the slide n', thus permitting said slide to have a slight yielding movement longitudinally in the head. Each end of the slide is cut away on two sides to form an L-shaped shoulder, (indicated at o in Fig. 2,) and each burnishing-tool o' is provided with a recess adapted to receive the rib portion of the slide, the burnishing-tool having side pieces which are adapted to almost but not quite come in contact with said L-shaped shoulder o. The burnishing-tool is provided with a notch, as at o^2, which receives the end of a retaining-spring o^3, secured to the slide and fitting said notch, so as to removably hold the burnishing-tool on the slide. This construction, as will be readily understood, provides for a slight rocking or tilting movement of the burnishing-tool in the direction of a plane parallel with the radius of the head and the axis of the shaft, but prevents lateral movement relatively to the head.

A yoke-shaped bracket p (see Figs. 2 and 2^a) is pivoted at p' to a bracket secured to the extension d' of the casing, the lower portion of the bracket p being provided with a movable piece p^2, pivoted thereto and adapted to be adjusted toward and from it by means of a suitable screw, so as to clamp and hold by the edges two disks p^3, of leather or other suitable material, which are fitted to suitable sockets on the front and rear faces of the said lower portion of the bracket and the removable piece p^2. Secured to each end of the head n and on the rear thereof is a friction-plate q, of brass or other suitable material.

The front friction-disk p^3 is pressed against the plate q by means of a spring-pressed plunger r, which bears against the rear disk p^3. This plunger r is fitted to a recess in a plug r', screw-threaded in a recess in the lower portion of the tubular extension d', so that it may be adjusted to alter its spring-pressure against the bracket p and head n. The spring r^2 of this plunger is designed to be of sufficient strength to hold the entire shaft f and the parts carried thereby in the position indicated by full lines in Fig. 2, said spring yielding when the head and the shaft are pressed to the clutch-uncoupling position indicated by the dotted lines in said figure, for the purpose hereinbefore described.

Referring to Fig. 5, it will be seen that the upper end of the rib g' is provided with a short overhanging nib or extension. The object of this is to abut against a suitable stop on the sleeve h, as indicated at g^3, in order that when the shaft is turned in its bearings to bring a different burnishing-tool in position it will be stopped in a proper position for the rib g' to engage the groove h' of the said sleeve h.

The general operation of the machine is similar to that of the machine illustrated in my application, Serial No. 540,939, filed March 8, 1895.

In view of the description of the operation of details given above further description of the complete operation is unnecessary.

I claim—

1. A sole-edge-burnishing machine, comprising in its construction a shaft provided with a head yieldingly supported relatively thereto and having a plurality of burnishing-tools, means for oscillating said shaft, and clutch mechanism for permitting the shaft to be turned to bring either of its burnishing-tools into operative position.

2. A sole-edge-burnishing machine comprising in its construction a shaft provided with a burnishing-tool and with a friction-plate adjacent thereto, a friction disk or surface in contact with said plate, and means for oscillating the shaft.

3. A sole-edge-burnishing machine comprising in its construction a shaft provided with a head and with means for oscillating it, a slide yieldingly supported in said head, and a burnishing-tool yieldingly connected with said slide.

4. A sole-edge-burnishing machine comprising in its construction an oscillating shaft having a head provided with a slide adapted to move in a plane at right angles to the axis of the shaft, a spring for yieldingly holding said slide in the head, said head being provided with a burnishing-tool support at each end, and burnishing-tools removably connected with said support and adapted to rock or tilt therein.

5. In a sole-edge-burnishing machine, the combination with a shaft provided with burnishing-tools at one end, of a clutch member at the other end, a coöperating clutch-member sleeve on the shaft, and mechanism for oscillating the shaft and burnisher through said clutch mechanism.

6. In a sole-edge-burnishing machine, the combination with the shaft f having the head n provided with burnishing-tools, of the collar g secured on the inner end of said shaft and provided with the rib g', the sleeve h on said shaft and provided with the groove h' and having the arm j, and the driving-shaft b provided with the multiple cam k.

7. In a sole-edge-burnishing machine, the

combination with the shaft *f* provided with means for oscillating it and having a burnishing-tool carrier at its outer end provided with a friction-plate *q*, of the hinged bracket *p* provided with a friction disk or surface at its free end, and the spring-pressed plunger *r* adapted to press the said bracket and friction-disk against the friction-plate *q*, substantially as and for the purpose set forth.

In testimony whereof I have signed my name to this specification, in the presence of two subscribing witnesses, this 18th day of May, A. D. 1896.

CHARLES F. STACKPOLE.

Witnesses:
A. D. HARRISON,
P. W. PEZZETTI.