(12) PATENT
(19) AUSTRALIAN PATENT OFFICE

(11) Application No. AU 199948876 B2
(10) Patent No. 773732

(54) Title
Coin dispenser arrangement

(51)6 International Patent Classification(s)
G07F 017/34

(21) Application No: 199948876

(22) Application Date: 1999.09.22

(30) Priority Data

(31) Number	(32) Date	(33) Country
10-281186	1998.10.02	JP

(43) Publication Date : 2000.04.13
(43) Publication Journal Date : 2000.04.13
(44) Accepted Journal Date : 2004.06.03

(71) Applicant(s)
Aruze Corporation

(72) Inventor(s)
Yuji Tokoyoda

(74) Agent/Attorney
Davies Collison Cave,Level 15,1 Nicholson Street,MELBOURNE VIC 3000

(56) Related Art
WO 1993/021606
WO 1997/018535
US 5232398

ABSTRACT OF THE DISCLOSURE

A coin dispenser arrangement for a gaming machine has a bucket portion for accommodating a plurality of coins and discharging the coins one by one, and a passage for guiding the discharged coins to a predetermined position, wherein the passage has a coin face adjustment for changing facing direction of the discharged coin to an optional facing direction. Because facing direction of coin discharged from the bucket portion can be changed optionally by the coin face adjustment, the passage does not need to have a gently sloped curve for changing the facing direction of coin. The inside space of the housing of gaming machine can be saved due to the shortened passage by eliminating the curve. Time required for paying out coins can be shortened. Also, when the curve is eliminated, coin clogging rarely occurs. As a result, coins can be smoothly paid out.

AUSTRALIA
PATENTS ACT 1990
COMPLETE SPECIFICATION

NAME OF APPLICANT(S):

Aruze Corporation

ADDRESS FOR SERVICE:

DAVIES COLLISON CAVE
Patent Attorneys
1 Little Collins Street, Melbourne, 3000.

INVENTION TITLE:

Coin dispenser arrangement

The following statement is a full description of this invention, including the best method of performing it known to me/us:-

Background the Invention

FIELD OF THE INVENTION

This invention relates to a coin dispenser installed in a gaming machine such as a slot machine or the like that is played by using a playing medium such as a coin or a medal (hereinafter, called coin).

DESCRIPTION OF THE RELATED ART

A coin dispenser for gaming machine is a device for paying out coins accommodated in a bucket one by one. A known coin dispenser has a structure by which a coin is guided to a higher position than a coin discharge slit of the bucket. This coin dispenser is called an "escalator type" coin dispenser.

This escalator type coin dispenser has a bucket portion having a bucket for accommodating a plurality of coins, a coin discharge disk that is disposed inclined to a horizontal plane in the bucket and is driven into rotation in the inclined plane, and a coin discharge slit; a passage for guiding coins, each of which has passed though the coin discharge slit, to a predetermined upper position; and a stand for supporting them.

In operation, coins accommodated in the bucket are carried to the coin discharge slit one by one by means of the coin discharge disk, and each coin that has passed though the coin discharge slit is pushed into a bottom end of the passage, moved in the passage up to the upper end of the passage and paid out through a coin outlet.

A coin is pushed out to the passage through the coin discharge slit

1 a

in an inclined state because the coin discharge disk is inclined to the horizontal plane, and the coin discharge slit is inclined as well.

Accordingly, the passage for guiding coins to the coin outlet in upper position has a gently sloped curve for gradually changing the coins from the inclined state to a vertical state.

For installing such an escalator type coin dispenser having the curved passage, a gaming machine needs a large space in its housing. Also, the passage is often clogged with coins in the curved portion. Time is also required for paying out coins because each coin that has been discharged from the bucket has to move in a long passage to arrive at the coin outlet in the upper position.

Summary of the Invention

According to the present invention, there is provided a coin dispenser for a gaming machine including a bucket portion for accommodating a plurality of coins and discharging the coins one by one, and a passage for guiding the discharged coins to a predetermined position, wherein the passage includes a coin adjustment means for adjusting a first orientation of each discharged coin to a second orientation different to said first orientation, the coin adjustment means including a pair of rollers mounted on shafts and disposed at either side of the passage to which the discharged coin is led, and a drive source for driving each of the rollers into rotation about their respective shafts, wherein rotation of the rollers draws the discharged coin therebetween and adjusts the first orientation of the discharged coin to said second orientation as the discharged coin passes through the rollers further into the passage.

According to this invention, the orientation of coins discharged from the bucket portion can be changed by the coin adjustment means. As a result, the passage does not need to have the gently sloped curve for changing the orientation of coins. The inside space of the housing of gaming machine can be saved due to the shortened passage by eliminating the curve. Also, when the curve is eliminated, coin clogging rarely occurs.

In a preferred embodiment of this invention, the second orientation of the coin discharged from the bucket portion is a vertical direction, and the coin having this vertical orientation can move upwards. As a result, it is unnecessary to form a gently sloped curve in the passage. The coin can be directly led to an upward passage and can smoothly move to the coin outlet at the upper end of the passage. Also, the coin is forced forward because the rotating rollers push out the coin.

In the embodiment, when the shafts of the pair of rollers are disposed to be moveable in a horizontal direction and the rollers are biased towards each other, it is possible to ease a shock that is added to the rollers and the coin when the coin enters between the rollers.

Preferably, at least one of the rollers is chamfered at one edge of facilitate adjustment of the discharged coin to the second direction. In one embodiment, both rollers are chamfered at one edge.

In the above embodiment, one of the pair of rollers is chamfered at an upper edge of its roll face and the other is chamfered at a lower edge of its roll face. This allows the inclined coin to be easily drawn between the pair of rollers. Consequently, the orientation of the coin can be changed smoothly.

Preferably the coin adjustment means can change the orientation of the coin at a speed depending on the rotary speed of the pair of rollers. This permits the coin orientation can be changed at once by the rollers rotating at a high speed just after the coin has been discharged from the bucket portion.

According to the present invention, the time for transferring a coin from the bucket portion to the upper position of the passage is greatly shortened, since the conventional gently sloped curve is unnecessary.

An object of a preferred embodiment of this invention is to provide a coin dispenser arrangement by which coins can be smoothly paid out, wherein the length of a passage for guiding coins discharged from a bucket up to a coin outlet in upper position is shortened so that space can be saved, and the time required for movement of coins is shortened, and further reducing the occurrence of coin clogging.

Brief Description of the Drawing

A preferred embodiment of the invention will now be described, by way of example only, with reference to the accompanying drawings, as set out below.

Fig. 1 is an isometric representation of a coin dispenser in accordance with a specific illustrative embodiment of this invention;

Fig. 2 is an isometric representation of a coin adjustment means in the coin dispenser of Fig. 1;

Fig. 3 is an isometric representation of a state where a coin is drawn between a pair of rollers of the coin adjustment means of Fig. 2;

Fig. 4 is a plan view that shows the action changing the orientation of a coin in the pair of rollers of the coin adjustment means of Fig. 2; and

Fig. 5 is a front view of the coin adjustment means of Fig. 2 as viewed from the bucket side.

Detailed Description

Fig. 1 shows an appearance of an "escalator type" coin dispenser 1 that is an illustrative embodiment of this invention.

This "escalator type" coin dispenser 1 has a bucket portion including a bucket 2 for accommodating a plurality of coins C, a coin discharge disk (not shown) that is driven into rotation in a inclined plane to a horizontal plane in the bucket and a coin discharge slit 3, and a passage for receiving the coins C that have been discharged through the coin discharge slit 3 and guiding the coins C up to a predetermined position. The passage 5 has an upward passage 6 for guiding the discharged coins C to an upper position.

Coins accommodated in the bucket 2 are carried to the coin discharge slit 3 by the coin discharge disk one by one and discharged through the coin discharge slit 3 into the passage 5. The coin discharge slit 3 is provided diagonally. A coin C is discharged though the coin discharge slit 3 in an inclined state (or first orientation) into the passage 5. In the passage 5, a pair of coin receiving plates 4 (Fig. 5) are connected with the coin discharge slit 3 for receiving the coin in the inclined state. The passage 5 is equipped with a coin adjustment means 5a for changing the orientation of the coin C discharged through the coin discharge slit 3 and for sending it to the upward passage 6.

The coin C moves with a vertical (or second) orientation in the upward passage 6. The coins C are pushed up from the lower side in the upward passage 6 and pushed out of an upper end 6a of the upward passage 6 one by one.

Fig. 2 is an isometric representation of the coin face adjustment means 5a; Fig. 3 is an isometric representation of the coin adjustment means 5a in operation; Fig. 4 is a plan view thereof; and Fig. 5 is a front view of the coin adjustment means 5a as viewed from a coin discharge slit 3 side of the bucket.

5

A pair of rollers 9a, 9b is disposed on right and left sides, respectively, of the passage to which the coin C on the coin receiving plates 4 is led. The directions "left" and "right" are used for illustrative purposes only and are not to be taken as limiting the scope of the invention or the embodiment.

As shown in front view of Fig. 5, roll faces of rollers 9a, 9b are vertically facing each other, the roll face of roller 9a being chamfered at upper edge to form a curved surface R1, and the roll face of roller 9b being chamfered at lower edge to form a curved surface R2. These curved surface R1, R2 are effective for smoothly drawing the inclined coin C on the coin receiving plate 4 between rollers 9a, 9b as explained later.

Each time a coin is discharged through the coin discharge slit 3, the pair of rollers 9a, 9b are driven into rotation so that each coin guided by the coin receiving plate 4 may be drawn between the rollers 9a, 9b and is sent to the upward passage 6.

Practically, depending on the situation of game, a controller of the gaming machine may also output a coin pay out signal to drive the coin discharge disk into rotation and to drive the rollers 9a, 9b into rotation.

A gear train (that is driven by a motor 17) is provided as a driving source for rotating the pair of rollers 9a, 9b. The gear train is constituted by a pinion 19 fixed to a rotation output shaft 18 of the motor 17, a reduction gear 15 engaged with the pinion 19, a first gear 7a formed as one body with the reduction gear 15, a second gear 7b engaged with the first gear 7a, a roller drive gear 7c fixed to a roller shaft 8c of roller 9a, and a roller drive gear 7d fixed to a roller shaft 8d of roller 9b. The first gear 7a is engaged with the roller drive gear 7c. The second gear 7b is engaged with the roller drive gear 7d.

Underneath the gear train, two cover plates 12, 13 are provided. The cover plates 12, 13 have perforations through which a shaft 8a of the first gear 7a, a shaft 8b of the

second gear 7b and roller shafts 8c, 8d extend therethrough. The rollers 9a, 9b are arranged underneath the cover plates 12, 13 respectively.

In the gear train, when the motor 17 rotates, each gear rotates in a direction shown by each arrow of Fig. 2, and roller drive gears 7c, 7d can rotate simultaneously. As a result, roller 9a rotates in clockwise direction, and roller 9b rotates in anti-clockwise direction. A coin C can thus be drawn between rollers 9a, 9b by rotation of the rollers 9a, 9b.

Under the cover plate 12 is disposed a turnable member 10 using the shaft 8a of the first gear 7a as the fulcrum and has a hole for permitting the roller shaft 8c to extend therethrough in a condition where the roller shaft 8c can rotate. Under the cover plate 13 there is disposed a turnable member 11 using the shaft 8b of the second gear 7b as a fulcrum and has a hole for permitting the roller shaft 8d to extend therethrough in a condition where the roller shaft 8d can rotate.

The roller shafts 8c, 8d extend through prolonged perforations 12b, 13b of the cover plate 12, 13, respectively, so that the roller shafts 8c, 8d may be movable in association with the movement of the turnable members 10, 11 and the movement thereof may be kept in a proper range.

The coin orientation is changed to its second vertical orientation during its passage through between the rollers 9a, 9b. It is desirable to nip the coin between the vertical roll faces in order to stand up the coin in the vertical orientation. It is also desirable that both faces of the coin come into contact with roll faces of rollers 9a, 9b, respectively.

The turnable members 10, 11 are connected with a coil spring 14 at both ends of the spring 14 to be biased towards each other. Therefore, when the inclined coin C enters the space between the rollers 9a, 9b, the space thereof can increase, and when the coin C

passes between of the roller 9a, 9b, the interval between the rollers 9a, 9b becomes narrow by the biasing force of the coil spring 14.

For keeping a certain interval necessary for a coin to pass between the rollers 9a, 9b, the cover plates 12, 13 have stoppers 12a, 13a for stopping the movement of the turnable members 10, 11 by engaging with the movable ends of the members 10, 11, respectively.

In Fig. 3, the coin C is going to be drawn between the pair of rollers 9a, 9b.

The inclined coin C enters between the rotating rollers 9a, 9b and pushes them apart. However, the rollers 9a, 9b are forced back towards each other by the coil spring 14 so that the inclined coin C is caught by the roll faces of the rollers 9a, 9b and its inclined orientation is changed to a vertical orientation and is then sent to the upward passage 6.

As in the embodiment, biasing the pair of rollers towards each other with the spring can ease the shock caused when a coin discharged from the bucket portion is drawn between the pair of rollers. Thus, the space between the pair of rollers may be adjusted so as to realize a smooth action in a coin being drawn therein and discharged out.

Movement of rollers 9a, 9b is explained referring to Fig. 4. In Fig. 4, the coin before entering the coin adjustment means 5a is shown by "A" and the coin discharged from the coin adjustment means 5a is shown by "B".

When the inclined coin A is drawn between the pair of rollers 9a, 9b to spread the space between the rollers 9a, 9b, the roller shafts 8c, 8d move in a direction away from each other, causing movement of the turnable members 10, 11, in the same direction respectively. As a result, the interval between the rollers 9a, 9b is widened. Double dotted lines of rollers 9a', 9b' show the positions of rollers 9a, 9b when the rollers 9a, 9b move to widen the interval between them.

A coin drawn between rollers 9a, 9b moves in a direction shown by the arrows.

When the coin enters between the rollers 9a, 9b, the coin is inclined as shown by the coin A. However, the coin changes its orientation while passing through between the rollers 9a, 9b and when the coin is sent out of the coin adjustment means 5a, the coin is in a vertical orientation as shown by the coin B.

Because the coin is now in a vertical orientation, it can be moved upward, and the coin can be directly sent to the upward passage 6. Accordingly, it is unnecessary to form a gently sloped curve in the passage for changing the inclined orientation of coin to a vertical orientation.

By disposing the coin adjustment means 5a in the passage near the coin discharge slit and by forming the vertically upward passage 6 in front of the coin adjustment means 5a, there is provided a coin dispenser that is minimized in size, in which coin clogging hardly occurs, and the movement time of coins can be minimized due to the shortened passage.

Next, a state where a coin enters the coin adjustment means 5a from the coin receiving plate 4 is explained referring to Fig. 5.

Coin A is led to the coin adjustment means 5a in an inclined state where the coin is raised at the right side by the coin receiving plate 4. When coin A enters between rollers 9a, 9b, the coin A comes in to contact with the curved surface R1 of roller 9a at the right side, and the coin A comes into contact with the curved surface R2 of roller 9b at the left side. Because the coin A can come into contact with the rotating rollers 9a, 9b in an inclined state, it can be drawn between the pair of rollers 9a, 9b smoothly.

If the curved surfaces of the rollers 9a, 9b are made too large, the vertical roll faces necessary for changing the coin orientation to vertical become too small to change the

orientation of a coin to vertical direction. Accordingly, the shape and size of the rollers are designed so as to easily draw in a coin and to sufficiently change the orientation of the coin.

At least the surfaces of the pair of rollers 9a, 9b are desirably made of an elastic material, such as a rubber material or the like, for smoothly changing the orientation of the coin and for sending the coin forward.

In the coin adjustment means 5a of the embodiment, the roller shafts of the rollers 9a, 9b are movable shafts so that the rollers 9a, 9b can be moved apart or towards each other depending on the power added. However, the coin dispenser of the present invention may include a coin adjustment means that has a pair of rollers arranged to be unmovable in a predetermined interval for drawing in an inclined coin and changing the orientation of the coin to send out the coin.

In the embodiment, the orientation of the coin is changed to the vertical direction. However, according to the present invention, the orientation of the moving coin may be changed to another orientation.

In the embodiment, the coin adjustment means 5a is positioned in the passage near the coin discharge slit 3. In the present invention, the position of a coin adjustment means is not so limited, and it can be positioned at any location necessary to change the orientation of the moving coin.

Throughout this specification and the claims which follow, unless the context requires otherwise, the word "comprise", and variations such as "comprises" and "comprising", will be understood to imply the inclusion of a stated integer or step or group of integers or steps but not the exclusion of any other integer or step or group of integers or steps.

The reference to any prior art in this specification is not, and should not be taken as, an acknowledgment or any form of suggestion that that prior art forms part of the common general knowledge in Australia.

THE CLAIMS DEFINING THE INVENTION ARE AS FOLLOWS:

1. A coin dispenser for a gaming machine including a bucket portion for accommodating a plurality of coins and discharging the coins one by one, and a passage for guiding the discharged coins to a predetermined position, wherein the passage includes a coin adjustment means for adjusting a first orientation of each discharged coin to a second orientation different to said first orientation, the coin adjustment means including a pair of rollers mounted on shafts and disposed at either side of the passage to which the discharged coin is led, and a drive source for driving each of the rollers into rotation about their respective shafts, wherein rotation of the rollers draws the discharged coin therebetween and adjusts the first orientation of the discharged coin to said second orientation as the discharged coin passes through the rollers further into the passage.

2. The coin dispenser of claim 1, wherein at least one of the rollers is chamfered at one edge to facilitate adjustment of the discharged coin to the second orientation.

3. The coin dispenser of claim 2, wherein both rollers are chamfered at one edge.

4. The coin dispenser of claim 2, one of the pair of rollers is chamfered at an upper edge of its roll face and the other is chamfered at a lower edge of its roll face.

5. The coin dispenser of any one of the preceding claims, wherein the coin adjustment means includes means for biasing the rollers towards each other.

6. The coin dispenser of claim 5, wherein said biasing means includes a spring.

7. The coin dispenser of any one of the preceding claims, wherein the coin adjustment means includes a housing for said pair of rollers and said shafts of the rollers

are disposed for pivotal movement relative to the housing.

8. The coin dispenser of any one of the preceding claims, wherein the coin face adjustment means adjusts the orientation of the discharged coin at a speed depending on the rotary speed of the pair of rollers.

9. A coin dispenser substantially as hereinbefore described with reference to the accompanying drawings.

DATED this 16th day of February, 2004

Aruze Corporation

By DAVIES COLLISON CAVE

Patent Attorneys for the applicant(s)

FIG. 1

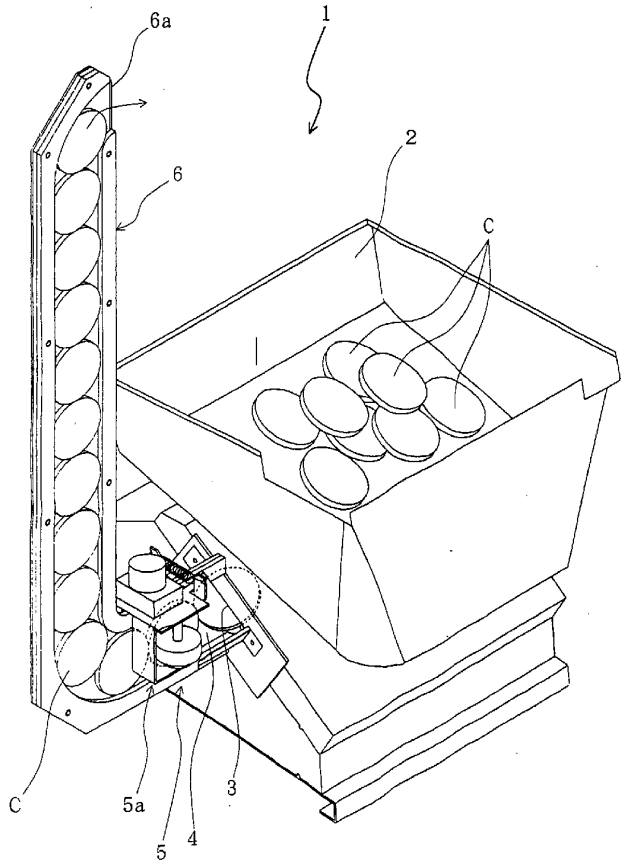

FIG. 2

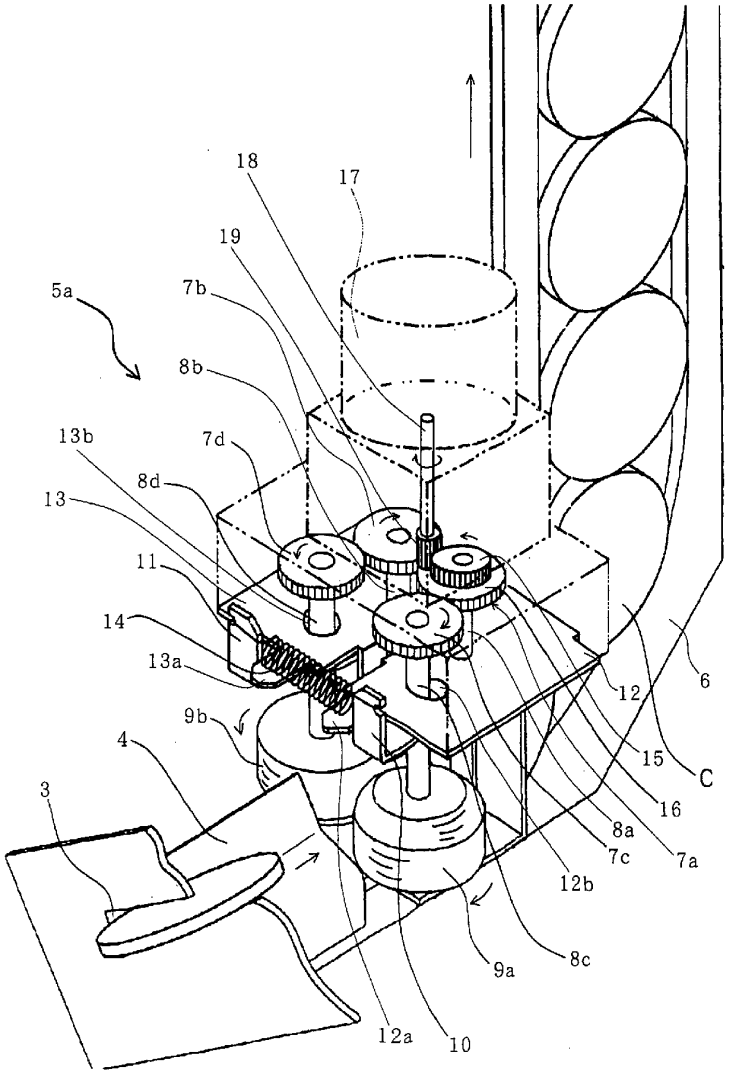
18
17
19
5a
7b
8b
13b
7d
8d
13
11
14
13a
9b
4
3
12a
10
9a
8c
12b
7c
8a
16
15
12
6
C
7a

FIG. 3

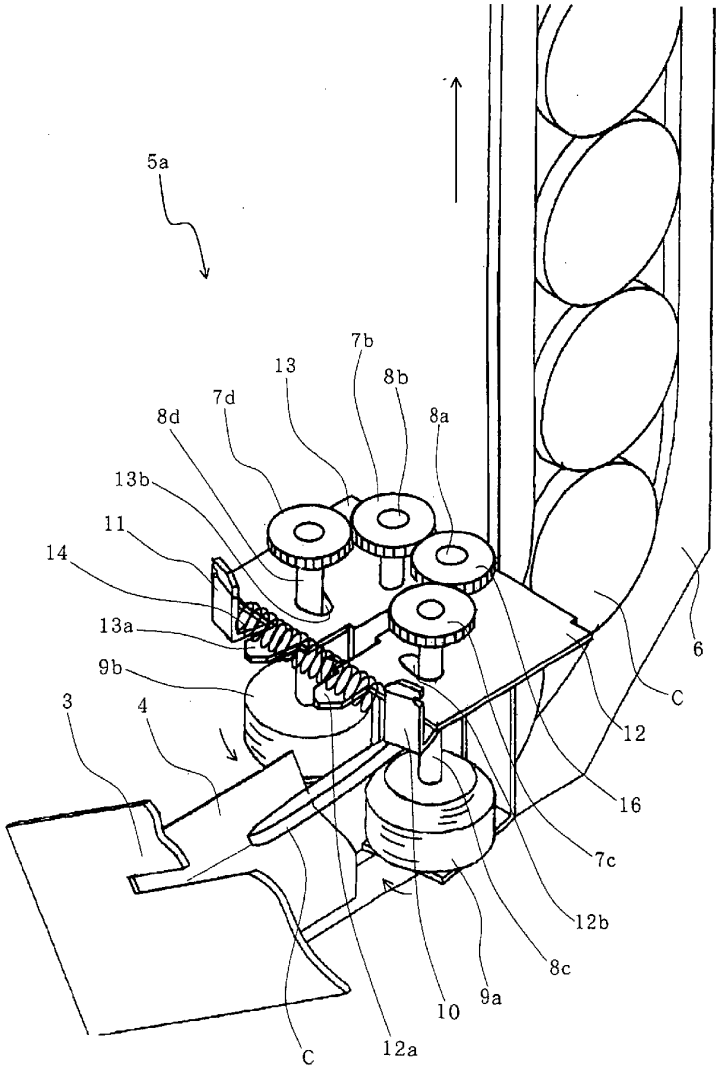

FIG. 4

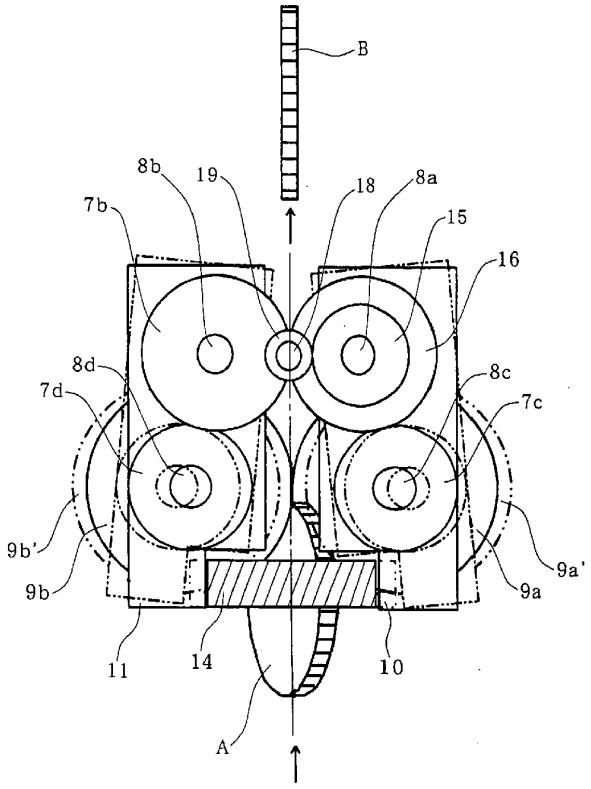

FIG.5

