Feb. 29, 1944. M. M. YARDENY 2,342,717

ELECTRIC CONTROLLING DEVICE

Filed Sept. 20, 1940 4 Sheets-Sheet 1

Fig. 1

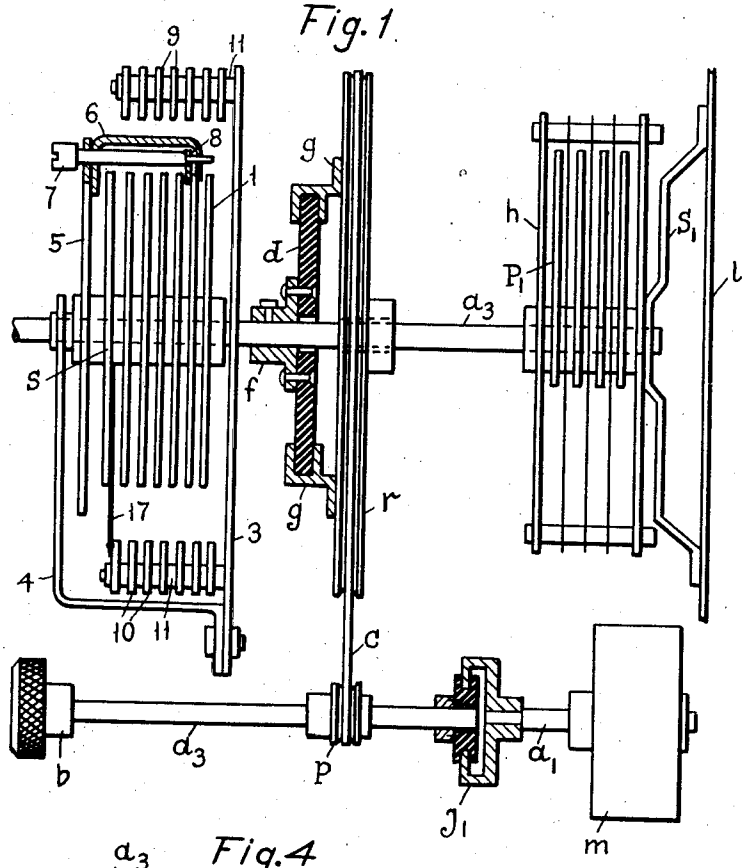

Fig. 4

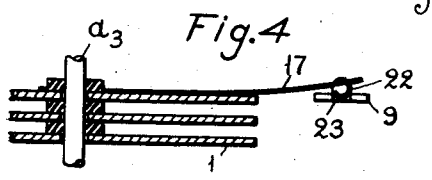

Fig. 5

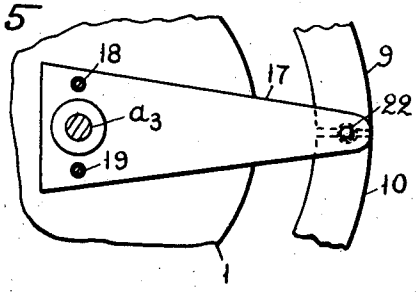

Fig. 6

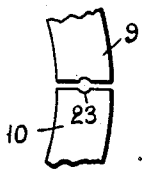

Fig. 7

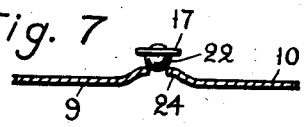

MICHEL M. YARDENY
INVENTOR.

BY John P. Wikonow
ATTORNEY

Feb. 29, 1944. M. M. YARDENY 2,342,717

ELECTRIC CONTROLLING DEVICE

Filed Sept. 20, 1940 4 Sheets-Sheet 2

Fig. 2.

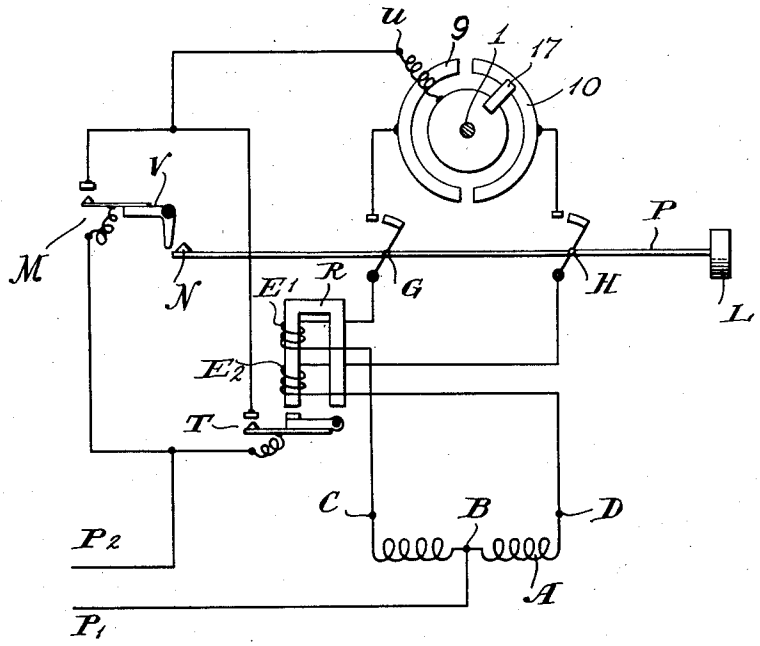

Fig. 3.

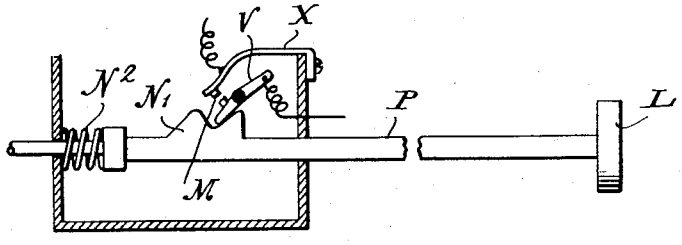

INVENTOR.
MICHEL M. YARDENY
BY
ATTORNEY.

Feb. 29, 1944. M. M. YARDENY 2,342,717

ELECTRIC CONTROLLING DEVICE

Filed Sept. 20, 1940 4 Sheets-Sheet 3

Fig. 8

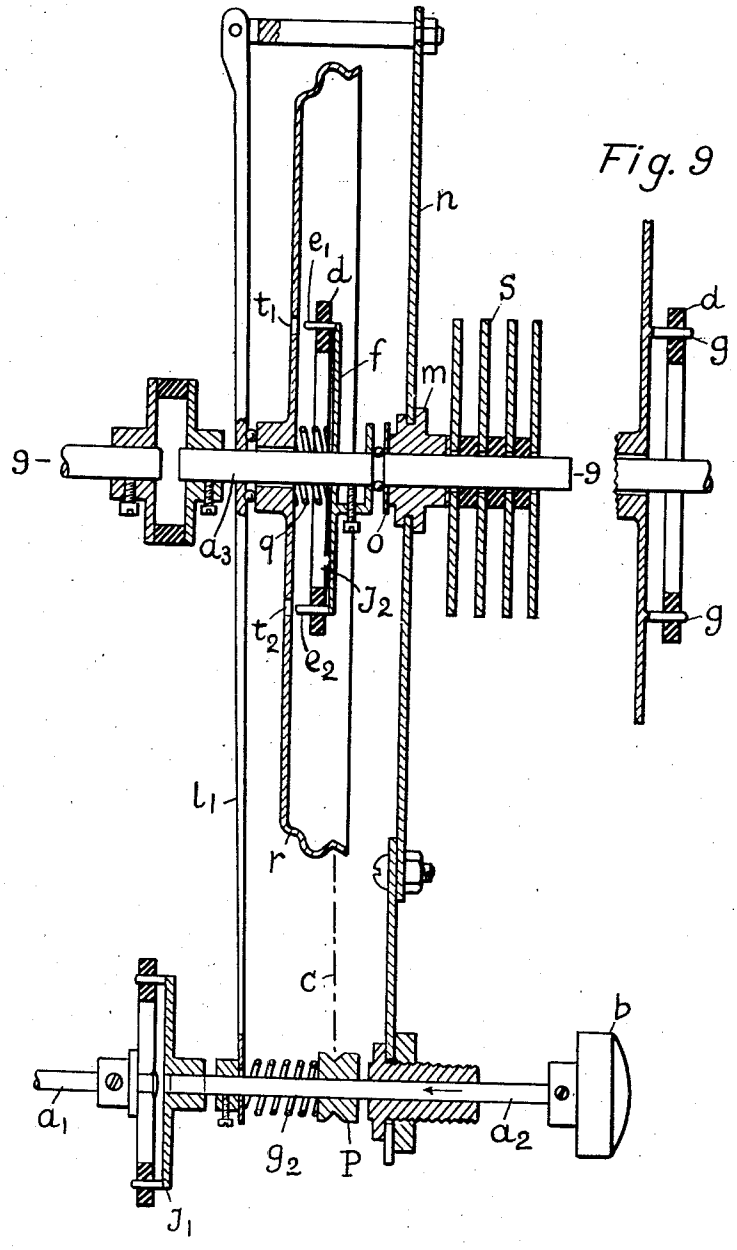

Fig. 9

MICHEL M. YARDENY
INVENTOR.

BY John P. Wilson
ATTORNEY

Feb. 29, 1944. M. M. YARDENY 2,342,717

ELECTRIC CONTROLLING DEVICE

Filed Sept. 20, 1940 4 Sheets-Sheet 4

Fig 10

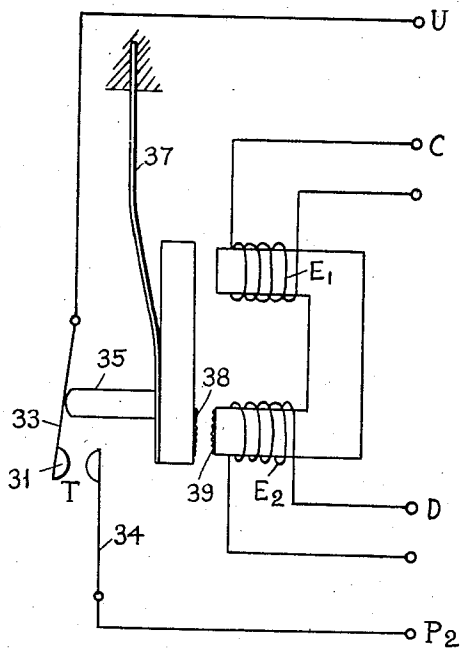

Fig 11

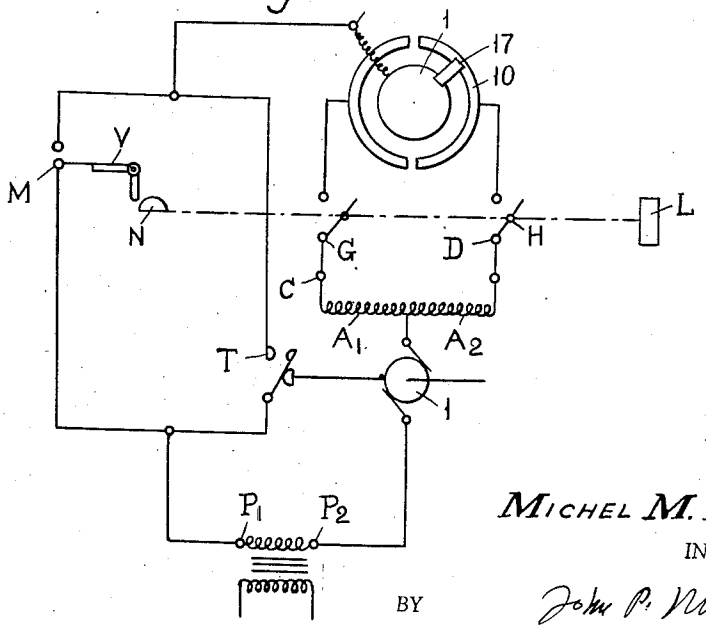

MICHEL M. YARDENY
INVENTOR.

BY John P. McKonow
ATTORNEY

Patented Feb. 29, 1944 2,342,717

UNITED STATES PATENT OFFICE

2,342,717

ELECTRIC CONTROLLING DEVICE

Michel M. Yardeny, New York, N. Y.

Application September 20, 1940, Serial No. 357,660
In Great Britain January 30, 1939

32 Claims. (Cl. 172—239)

Certain improvements and adaptations of the invention of this application are disclosed in my copending application Serial No. 367,982, filed November 30, 1940.

The invention relates to a device for selecting particularly by remote control a predetermined position of an apparatus having a plurality of operative positions, and will hereinafter be described in connection with the tuning of a radio set such as a transmitter or receiver by way of example. The invention contemplates to control in such radio set the variable condenser or other tuning member by means of a motor which is rotatable in two directions and can be stopped in any selected position by current opposition.

The invention further aims to provide a device for creating the current opposition and consists in the combination of two conducting segments of substantially 180° that are insulated from each other and are each insulated from each other and are each connected to one terminal of a winding of the motor, whereas the common current take up of the motor is connected to one of the terminals, the other supply terminal being connected to a conducting brush which is adapted to slide on the segments and engage in a slot provided between the two segments, while remaining in contact with both segments, thereby creating the current opposition by simultaneously closing the two circuits.

In order to enable the receiver to be tuned in a simple manner to the selected transmitters and to enable the user to select transmitters quickly, the device according to the invention is provided with a selector which is formed by a series of discs loosely mounted on a spindle coupled to the shaft of the variable condenser, each disc being provided with means enabling it to be individually locked relatively to said spindle, and with a brush adapted to slide on a pair of half segments.

The invention also consists in the provision of a relay which cuts off the current supply from the motor when the brush is astride on the two conducting segments.

Further objects and details of the invention will be apparent from the hereinafter description of the drawings illustrating an embodiment thereof by way of example.

In the drawings Fig. 1 shows diagrammatically a partial section of a device according to my invention; Fig. 2 is a circuit diagram thereof; Fig. 3 is an elevation of a switch employed therein; Figs. 4 to 7 illustrate an embodiment of the brush; Fig. 8 is a diagrammatic section of a modified part of the embodiment of Fig. 1; Fig. 9 is a partial section along line 9—9 of Fig. 8; Fig. 10 is a diagram of a delayed action relay; Fig. 11 is a modification of the circuit diagram of Fig. 2.

Referring now to the drawings, the device according to Fig. 1 comprises a reversible motor m, the shaft a, of which is connected through a preferably very flexible resilient joint j^1, made of rubber or other approximate material, to the shaft a^2 of the tuning knob b. On the shaft a^2 is fixed a small pulley p connected by means of a belt c to a wheel r mounted on the shaft a^3 of the selector by means of a resilient joint j^2 formed by a disc d made of rubber or other appropriate material, fixed on the one hand on the shaft by a clamping ring f and on the other hand secured to the wheel r by rigid connecting members g. On the shaft a^3 are mounted the selector s, the condenser h and the pointer. The latter is not shown.

The selector comprises a series of discs 1, and there are as many discs 1 as it is the intention to tune selected stations with the device. The discs 1 are rotatably mounted on the shaft a^3 which is in turn mounted between a plate 3 and a Z-shaped support 4. In order to enable the discs 1 to be locked in any desired positions relatively to the shaft a^3 of the condenser, the shaft is secured to a disc 5 on which are fixed rigid U-shaped connecting members 6 as many as there are discs 1. Each connecting member is provided with a clamping screw 7 having a washer 8. The U-shaped parts only one of which is shown are of different lengths which correspond to the distance of each disc 1 from disc 5 and enable each disc 1 to be fixed relatively to the shaft a^3 in any desired position by clamping the disc between the washer 8 and the bent end of the U-shaped part 6.

A series of rings, as many as there are discs 1, are fixed on the plate 3, which rings are each formed by two insulated half segments 9, 10 and are arranged concentrically about the discs 1. The half segments 9, 10 are mounted on the plate 3 by means of insulating rods 11 so that said half segments are electrically insulated from each other and from the plate 3.

Each disc 1 is secured to a conducting brush 17 which is pressed against the face of each pair of corresponding half segments. In order to obtain the stopping of the brush in a predetermined position, the brush and the spaces between the half segments 9, 10 must be so formed that the two half segments can only be in contact simul-

taneously with the brush in a single position. For this purpose, the brush 17 is so constructed that it can engage with its end in the space between the two half rings.

A suitable circuit to operate the device is illustrated in Fig. 2. However, it is to be noticed that there are as many circuits similar to that of Fig. 2 as there are discs 1, and that all these circuits have in common only the motor and the source of current. In Fig. 2, A denotes the stator winding of the motor indicated by *m* in Fig. 1, the rotor winding being not shown. The two terminals C, D of the stator are connected to the two segments 9 and 10 respectively of the coordinate selector through switches G and H. Reversely wound coils E_1 and E_2 of a relay magnet R are connected between C and G and between D and H. The central tapping B of the stator is connected to a supply terminal P_1; the other terminal P_2 being connected to the conducting brush 17 of the disc 1 through a switch T controlled by the relay R. Another switch M connected parallel in the supply circuit P_2U is adapted to produce a temporary contact so as to give an impulse to the relay R. A suitable embodiment of the switch M is shown in Fig. 3. It comprises a movable contact member V which comes temporarily into contact with a contact spring X when it is lifted by the forward movement of the cam N, against the restraint of another spring N_2. The switches G, H and M are simultaneously operated by push button L through rod P and the arrangement may be such that when button L is pushed towards the left in Fig. 1 all three switches are closed, and when the button is released and returned, e. g., by a spring N_2 to its original position G and H remain closed whereas M is opened. Furthermore, the push button structure may be of that well-known type which opens all switches G and H of the other similar circuits when it closes the switches G and H of the circuit to which it pertains. The switches G and H can be also opened manually. It is necessary to open these switches in addition to the disconnecting action of the relay, so that closing of the gap between the segments 9 and 10 by the arm 17 will not affect the operation of the device when other segments are connected in parallel with the segments 9 and 10.

Thus, by actuating the push button L, the cam N closes the contact of the switch M for a very short time, a current impulse therefore passes through one of the windings E_1 or E_2, according to the position of the brush 17, said impulse actuates the relay R which closes the switch T and holds same in this position until the brush 17 comes astride on the two half segments 9 and 10; the current then flows simultaneously through the two windings E_1 and E_2 which being wound in opposite directions, weaken or eliminate the two magnetic fields and the relay releases the switch. The difference between the forces of the fields of the two windings must be smaller than the force of the spring of the relay.

However, in order to attain proper and instant stoppage of the motor and reliable operation of the device it is necessary to avoid as far as possible deformation of the discs 1 which might occur owing to the forces with which the brushes bear against the segments 9 and 10. For this reason, I prefer to attach the brushes 17, suitably made of a resilient material, to the discs as near as possible to the disc centers and extending radially therefrom as shown in Figs. 4 and 5. In this manner, all deformations, if any, are borne by the resilient spring rather than by the disc. The brushes may have any suitable form, e. g., triangular, and the brush contact may slide over or under the segments or move in any other suitable manner.

However, it is of utmost importance, particularly in a tuning device for short waves, that the brush can be in contact with the two segments only in a single predetermined position. This means, the brush contact should be in exactly the same position relatively to the opposite ends of the segments whenever the motor stops owing to contact between 9 and 10 being established. Although the current is cut off from the motor, it might occur that the rotor is carried round by its momentum and the brush does not stop in the slit between the two contacts but continues to rotate, thereby closing the circuit of the opposite contact, which causes the rotor to rotate in the opposite direction, in which its momentum again carries the brush beyond the slit, and so forth. For this reason, I found the contact structure according to Figs. 4 to 7 advantageous because it combines with an exact spot contact a relatively strong mechanical braking effect. In these figures, the resilient brush 17 is triangular and fixed by means of two eyes 18, 19 to the disc of the selector; near the end of the spring is formed a cage in which is arranged a ball 22 which is adapted to engage a circular recess 23 formed between the two segments 9 and 10. Furthermore, the ends of the segments are so bent as to form small mounds 24 which the ball 22 has to climb in order to reach the recess 23. In this manner the stoppage of the motor is obtained by the simultaneous electrical action of the current opposition and of the mechanical braking effect produced by the engagement of the ball in the recess.

It cannot be avoided that owing to the sudden stopping of the motor certain oscillations occur. However, it is necessary to dampen such oscillations rapidly and to prevent them from reaching the condenser. For this purpose, the shaft of the motor is connected to the shaft of the condenser through a reducing gear, the driven element of which is mounted on the condenser shaft by means of a resilient internal friction joint which acts at the same time as a buffer and as a damper. A structure suited for this purpose has been shown and described hereinbefore. In fact, by means of this system, the oscillations of the rotor, i. e., of the shaft a^1, are only transmitted to the wheel *r* after a considerable reduction. Ratios of 20/1 can be readily obtained; thus an oscillation of 120° is expressed on the wheel by an oscillation of 6°, but even this is not transmitted to the selector shaft owing to the resilient joint, which acts at the same time as a buffer and as a damper.

It should be pointed out that in spite of the insertion of a resilient element, there can be no play between the selector and the variable condenser, the connection between these two elements being rigid. Of course, the resiliency of the disc has to be calculated proportionally to the reduction; the greater the ratio, the more rigid may be the disc.

In order to prevent any displacement between the selector and the variable condenser *h*, the latter is mounted on the frame *l* of the receiver by means of a U-shaped support S_1 which does not allow of any swing in the direction of the movement of the blades p^1 this same support be-

ing resilient perpendicular to the direction of said movement so as to prevent "Larsen" effect.

In order further to increase the efficiency of the system, a second resilient torsion joint is inserted between the motor and the driving element of the transmission.

The insertion of these resilient joints makes it difficult to tune the receiver by hand, in particular on the short waves.

This drawback can be overcome by adding a clutch which is controlled by the manual tuning knob and enables a rigid connection or a resilient connection to be made at will between the driven element of the transmission and the shaft of the variable condenser.

Figs. 8 and 9 illustrate an accordingly modified form of the transmission between the motor shaft a_1 and the selector. In this structure, the shaft a_1 of the motor is connected through a joint or flexible blade j^1 to the shaft a_2 of the manual tuning knob b. On the shaft a^2 is fixed a small pulley p, connected by means of a belt or the like c to a drum r mounted on the shaft a^3 of the selector s by means of a resilient joint j^2 formed by a washer d made of rubber or other appropriate material and fixed, on the one hand, on the shaft a^3 by means of a fork-shaped part f, and on the other hand secured to the drum r by means of the studs g (Fig. 9). A rigid clutch is formed, on the one hand by the ends e^1 and e^2 of the fork f, and on the other hand by holes t^1 and t^2 provided in the drum r opposite said ends. If it is desired to obtain a rigid connection between the drum r and the shaft a^3, it suffices to engage the ends e^1 and e^2 in the corresponding holes t^1 and t^2 by shifting the drum. This clutch is actuated by the tuning knob b through the pivoted lever l^1 acting on the boss of the drum r. A retracting spring q is provided to hold the drum in the disengaged position. On the other hand, in order to permit of the axial movement of the manual shaft a^2 without moving in this direction the motor shaft a^1, the flexible joint j^1 is so mounted that it can slide on the shaft a^2. A spring q^2 is provided on the shaft a^2 between the pulley p and the lever l^1 to prevent the lever when in the disengaged position from vibrating in resonance with the vibrations of the loudspeaker.

As further shown in this figure, the fixing of the selector is obtained by means of a ring m attached to the frame n. The shaft of the selector passes through said ring. In order to prevent the longitudinal movement of the shaft relatively to the ring, a resilient washer o is provided in a groove formed in the shaft a^3.

From the foregoing statements as to the electrical braking effect of the current opposition when the brush contacts both segments **9** and **10** it will be clear that an instantaneous reaction of the relay releasing switch T is not desired. In fact, the relay must hold the switch T shou'd the brush contact **22** jump the recess **23** in order to insure that the contact finally settles down in said recess. For this reason, a relay with delayed release action is to be suitably used in the place of relay R. Such a relay is illustrated in Fig. 10. It is provided with two oppositely wound windings E^1, E^2 which are connected as in the embodiment shown in Fig. 2, to the circuit D—**10** or C—**9** of the segments **9**, **10**. Said relay actuates the switch T which is formed by two contacts **31**, **32** mounted on two resilient blades **33**, **34**; the blade **34** presses against an insulating part **35** which is secured to the movable armature of the relay. On the opposite faces **38**, **39** of the magnet of the relay and of the armature, is applied an adherent material, preferably comprising rubber, in order to delay the action of the relay. A flat spring **37**, on which is mounted the armature, tends to move same away from the magnet.

The device operates in the following manner:

For calibrating the apparatus to any station, a push button L is depressed which causes the motor to rotate until the disc stops with its conducting brush **17** in the space between the two corresponding half rings **9** and **10**. The corresponding calibrating screw **7** is then loosened, thereby enabling the station to be found by rotating the variable condenser with the aid of knob b without moving the disc **1**, and the screw **7** is then tightened again.

This system locking the discs independently enables any station of the dial to be selected for each push button and to change the station of any button without upsetting the adjustments of the other buttons.

In order to tune in a station after the discs **1** have been adjusted, the particular push button L is depressed which simultaneously closes the switches G, H and the momentary switch M. This causes current to flow from P_2 through M, V, and **1** to **17**. Depending now whether **17** contacts segment **9** or **10** the current goes on through G, E_1, C, B or through H, E_2, D, B to P_1. In either case R will be instantaneously energized so as to close switch T. Simultaneously the motor will rotate to turn shaft a^3 and with this the condenser and the selector discs **1**. As soon as the brush **17** with ball **22** reaches recess **23** the opposing currents will stop the motor and relay R will open switch T with a slight delay so as to cut off the current.

If small universal motors are used for driving the selector, the relay may be dispensed with.

It is known that the shaft of a small universal motor with two field magnets moves in direction of its axis at the instant when the current supply is switched on to the motor, and only returns to its original position after the stoppage of the motor, obtained either by switching off the current, or by current opposition, i. e., by simultaneously switching on two oppositely wound fields.

This peculiarity of universal motors is used, according to the invention to actuate, by the movement of the shaft, a contact that keeps the circuit of the motor closed. This is illustrated in Fig. 11 in which A_1, A_2 represent the two field windings of a universal motor. The two terminals C, D of A_1 and A_2 are connected to the two contacts **9**, **10** of the selector through the two switches G and H respectively which are actuated by a push button L_1 of the usual type. The central tapping B of the motor is connected to one of the terminals P_2 of a source of energy, e. g., of the secondary of a transformer through the armature I of the motor, whereas the other terminal P_1 of the source is connected to the terminal U of the brushes **17**. This line P_1—U is provided with two switches M and T connected in parallel. The switch M is actuated by the push button L through a cam N and enables a temporary contact to be made, whereas the switch T is actuated by the translation of the shaft a of the motor.

This device operates as follows:

By depressing the push button L, the pusher closes the contacts G, H and, for a space of time, the contact of the switch M. A current impulse therefore flows through one of the windings A_1

or A_2 of the motor according to the position of the brush 17; this impulse is sufficient to produce the translatory movement of the shaft *a* of the motor and thereby to close the contact T actuated by said shaft. The shaft maintains this contact closed until the brush 17 of the selector has been carried round by the motor and comes astride on the two segments 9, 10 (the mechanical connection between the motor and the selector is not shown in the diagram); the current then flows simultaneously through the two windings A_1, A_2, the magnetic fields of which eliminate each other, the shaft *a* returns to its inoperative position and the contact of the switch T is broken.

Having thus described my invention, it will be apparent to those skilled in the art that, many alterations and modifications of the illustrated embodiment can be made without departing from the essence and spirit of the invention. Thus, e. g., the push buttons may be mounted on the set or arranged apart from the set, thereby permitting of remote control. Or while I have shown stationary contact segments with co-ordinate rotatable selector discs, the discs may be stationary and the segments movable.

I claim:

1. An electric controlling device comprising a plurality of pairs of conducting members mounted in spaced relation to each other, the members of each pair being separated by a gap, a reversible electric motor electrically controlled by the respective members of every pair, contact brushes slidably engaging respective conducting members and adapted to bridge the gaps in a predetermined position for stopping the motor, means to produce by the motor relative movement between the conducting members and the brushes, and means to adjust the relative positions of the brushes to select predetermined positions as close to each other as desired.

2. An electric controlling device comprising a plurality of pairs of stationary conducting members insulated from each other and separated by gaps in every pair, a shaft, contact members loosely mounted on the shaft in sliding contact with the respective pairs of conducting members, a reversible motor operatively connected with the shaft, fixing members, means to support the fixing members on the shaft, every fixing member being adapted to engage and attach to the shaft a corresponding contact member in a desired position, and means to energize any desired conducting member and a corresponding contact member, the motor being adapted to be stopped when the contact member reaches the corresponding gap.

3. An electric controlling device comprising a plurality of pairs of conducting members separated by gaps, contact members in a sliding engagement with the corresponding conducting members adapted to bridge the gaps, a reversible motor electrically controlled by the respective conducting members of every pair and by the corresponding contact member, the motor being adapted to be stopped when a contact member bridges the gap of a selected pair of said conducting members, means to produce by the motor a relative movement between the conducting members and the contact member, means to energize the motor by energizing a selected pair of conducting members, and means to automatically disconnect the motor circuit when the contact members reach a predetermined position, said means being of a delayed action type, the delay in the action being sufficient to permit stopping of the oscillations of the contact members incident to the stopping of the motor.

4. An electric controlling device comprising a plurality of sets of relatively movable control elements consisting of pairs of conducting members, the members of each pair being separated by a gap, and contact members slidably engaging the conducting members of respective pairs, a shaft, one set of said control elements being loosely mounted on said shaft, a motor operatively connected with said shaft for rotating the same, means for electrically controlling said motor by said control elements, means for selectively energizing said control elements to control the operation of said motor, means to stop said motor when a selected contact member reaches its corresponding gap, means for placing each of said control elements of one set in any desired position relative to said shaft independently of the positions of the others of said sets, and individual means for each of said last named elements to lock same on said shaft in the respective adjusted positions thereof.

5. An electric controlling device comprising a pair of conducting members separated by a gap, a contacting element movable relative to said conducting members for selectively contacting the same, drive means for effecting corresponding relative movement between said contacting element and said conducting members, and means for gradually increasing the frictional resistance between the conducting members and said contacting element shortly prior to the element occupying said gap and as such element and gap approach each other.

6. An electric controlling device comprising a pair of conducting members separated by a gap, a contacting element movable relative to said conducting members for selectively contacting the same, a reversible electric motor having its windings electrically controlled by said conducting members and by said contacting element, said motor being adapted to stop when said contacting element occupies said gap, drive means actuated upon operation of said motor in either direction for effecting corresponding relative movement between said contacting element and said conducting members, and raised means on said conducting members at either side of said gap for frictionally resisting the movement of said contacting element away from said gap.

7. An electric controlling device comprising a pair of conducting members separated by a gap, a brush movable relative to said conducting members for selectively contacting the same, means for resiliently urging said brush toward said conducting members with a predetermined pressure, a reversible electric motor having its windings controlled by said conducting members and by said brush, said motor being adapted to stop when said brush occupies said gap, drive means actuated upon operation of said motor for effecting corresponding relative movement between said brush and said conducting members, and means for increasing said predetermined pressure between the conducting members and said brush when said brush occupies said gap.

8. A controlling device comprising a pair of conducting members separated by a gap, a brush member in the form of a resilient spring member supported at one end and extending generally parallel to the plane of said conducting

members and adapted to exert a yielding pressure in the plane normal to said conducting members at the other end thereof spaced from its support, said spring having an aperture at said spaced end, and a ball of larger diameter than said aperture secured within said aperture to be held in relation to said spring and resiliently urged by said spring into accurate contact with said conducting members when at the gap.

9. An electric controlling device comprising conducting members separated by a gap, a contact member engaging and relatively movable with respect to said conducting members, a reversible electric motor having reversing windings controlled by said conducting and contact members and adapted to be stopped when said gap is reached, transmission means operated by said motor for effecting said relative movement between said conducting members and said contact member, and yieldable damping means having substantial internal friction included in said transmission means for suppressing oscillations in said relative movement as a result of the inertia effect in the stopping of said motor.

10. An electric controlling device comprising conducting members separated by a gap, a contact member engaging and relatively movable with respect to said conducting members and adapted to bridge said gap, a reversible electric motor having reversing windings connected in a circuit with said conducting and contact members and adapted to be rendered operative when said contact member engages only one of said conducting members and to be rendered inoperative when said gap is reached, means for checking said relative movement when said gap is bridged, transmission means operated by said motor for effecting said relative movement between said conducting members and said contact member, and anti-hunting means having substantial internal friction included in said transmission means for allowing overrunning of said motor as a result of the inertia effect in the stopping of said motor.

11. An electric controlling device comprising conducting members separated by a gap, a contact member engaging said conducting members, a shaft for supporting one of said members for movement relative to the other said members, an electric motor electrically controlled by the respective conducting and contact members and adapted to be rendered operative when said contact member engages only one of said conducting members and to be rendered inoperative when said gap is reached, means for checking said relative movement when said gap is reached, transmission means operated by said motor for effecting said relative movement between said conducting members and said contact member, and anti-hunting means having substantial internal friction included between said transmission means and said shaft for allowing overrunning of said motor as a result of the inertia effect in the stopping of said motor.

12. An electric controlling device comprising conducting members separated by a gap, a contact member engaging and relatively movable with respect to said conducting members, a reversible electric motor electrically controlled by the respective conducting and contact members and adapted to be rendered operative when said contact member engages only one of said conducting members and to be rendered inoperative when said gap is reached, transmission means operated by said motor including a low speed stage and a high speed stage for effecting said relative movement between said conducting members and said contact member, and yieldable buffer and damping elements having substantial internal friction included in said low and high speed stages for suppressing oscillations in said relative movement as a result of the inertia effect in the stopping of said motor.

13. An electric controlling device comprising conducting members separated by a gap, a contact member engaging and relatively movable with respect to said conducting members, a reversible electric motor having reversing windings electrically controlled by the respective conducting and contact members and adapted to be stopped when said gap is reached, transmission means operated by said motor for effecting said relative movement between said conducting members and said contact member, yieldable damping means having substantial internal friction included in said transmission means for suppressing oscillations in said relative movement as a result of the inertia effect in the stopping of said motor, and means for selectively rendering said yieldable damping means ineffective in said transmission means to provide direct rigid drive for manual adjustment.

14. An electric controlling device comprising conducting members separated by a gap, a contact member engaging and relatively movable with respect to said conducting members and adapted to bridge said gap, a reversible electric motor having reversing windings connected in a circuit with said conducting and contact members and adapted to be stopped when said gap is bridged, transmission means operated by said motor for effecting said relative movement between said conducting members and said contact member, yieldable damping means having substantial internal friction included in said transmission means for suppressing oscillations in said relative movement as a result of the inertia effect in the stopping of said motor, means to manually rotate the shaft, and means to rigidly connect the said shaft with the transmission when the manual control is used.

15. An electric control device comprising relatively movable control elements, a reversible motor having windings electrically controlled by the respective control elements, means providing for current supply to said windings under control of said movable control elements to secure rotation of said motor in the direction determined by the relative position of said control elements, said control elements in a predetermined relative positon effecting a change in said current supply to the motor windings to cause the motor to stop, electromagnetic means included in the circuits of said motor windings for disconnecting the motor from the supply circuit in response to said control elements moving into said predetermined relative position and for maintaining said motor circuit closed in positions other than said predetermined relative position thereof, and temporarily acting switch means for closing the motor circuit independently of said electromagnetic means for starting the motor.

16. The combination of claim 15 in which said electromagnetic means has adhesive material carried by the relatively movable elements thereof to provide for delay in the disconnecting action thereof.

17. The combination of claim 15, in which means are provided for delaying the disconnect-

ing action of said electromagnetic means until after said motor has stopped its rotation.

18. An electric controlling device comprising a pair of conducting members separated by a gap, a reversible electric motor having reversing windings connected with respective members of the pair, a shaft operatively connected with the motor, a contact brush on the shaft slidably engaging the conducting members and adapted to bridge the gaps for simultaneously energizing both windings for stopping the motor, an electromagnetic relay switch having two oppositely wound coils included in the respective circuits of the motor windings and adapted to close the motor circuit when only one of said coils is energized and to open the motor circuit when both said coils are energized, and additional means to momentarily energize said relay for closing the motor circuit to start the motor when said contact brush is displaced from said gap.

19. An electric controlling device comprising a plurality of pairs of conducting members insulated from each other, the members of each pair being separated by a gap, contact members in sliding engagement with the corresponding conducting members adapted to bridge the respective gaps, a reversible motor having its windings electrically controlled by the respective conducting and contact members, the motor being adapted to be stopped only when the selected contact member bridges a selected gap in a preselected position, drive means actuated by said motor for effecting relative movement between the conducting members and the contact members, and switch means to prevent the motor from being stopped when contact members other than the selected member bridge their corresponding gaps.

20. A controlling device comprising movable control elements separated by a gap, a contact member in sliding engagement with said elements and adapted to bridge said gap, a reversible electric motor with reversing windings connected with the respective control elements, drive means actuated by said motor for effecting said relative movement, means actuated by said control elements for deenergizing and stopping the motor when the selected contactor bridges a corresponding gap, the motor having an armature on an axially movable shaft adapted to move axially in one direction in response to the motor being energized and in the opposite direction upon being deenergized, switch means operated by said movement of the armature in said one direction for closing a circuit to said motor and adapted to open said circuit in response to said opposite movement, and additional switch means to independently energize the motor for starting its operation.

21. An electric controlling apparatus comprising a plurality of control elements, each control element consisting of a pair of conducting members separated by a gap and of a contact member for engaging the conducting members, a reversible electric motor, drive means operated by the motor for effecting relative movement between the contact members and the conducting members, switch means for energizing a selected control element from a source of current, means to cause rotation of the motor in one or the other direction in response to the selected contact member engaging one or the other conducting member, and electromagnetic means to disconnect the motor from its source of current with the switch means still closed, in response to the selected contact member bridging a corresponding gap.

22. An electric controlling apparatus comprising a plurality of control elements, said elements consisting of pairs of conducting members supported in spaced relation to each other, the members of each pair being separated by a gap, a shaft, contact members which each slidably and continuously engage at least one of the conducting members of a pair, one of the control elements being mounted on the shaft, a reversible electric motor operatively connected with the shaft, means to energize a selected contact member and the corresponding conducting member without energizing the other control elements, means to control rotation of the motor by the selected conducting and contact members, the motor being normally adapted to be stopped only when the selected contact member bridges the corresponding gap.

23. An electric controlling apparatus comprising a plurality of control elements, each control element consisting of a pair of conducting members separated by a gap and of a contact member for engaging the conducting members, a reversible electric motor, drive means operated by the motor for effecting relative movement between the contact members and the conducting members, switch means for energizing a selected control element from a source of current, means to cause rotation of the motor in one or the other direction in response to the selected contact member engaging one or the other conducting member, means to maintain the motor rotation until the gap is bridged by the selected contact member, electromagnetic means adapted to disconnect the motor from a source of current by increased current conditions incidental to the selected gap being bridged, and means to start the motor.

24. An electric controlling device comprising a pair of control elements, an electric motor, drive means operated by the motor for moving one element in relation to the other, means to stop the motor when the movable element reaches a predetermined position on the other control element, the motor having a movable armature normally remaining out of alignment with field magnets but adapted to be moved inwardly of the field when the motor is energized, means operated by the armature for stopping the motor in response to the movable element reaching a predetermined position on the other control element, and means to start the motor.

25. Control elements for an electric control system comprising a pair of conducting members separated by a gap, a contact member extending over the conducting members, a rounded projection at the end of the contact member resiliently wedged between the contact member and the conducting members, means to effect relative movement between the contact member and the conducting members, and means to stop the relative movement in response to the gap being bridged by the rounded projection, the edges of the conducting members in the gap having arcuate recesses for the rounded projection for increasing the contact area.

26. An electric controlling apparatus comprising a plurality of pairs of conducting members mounted in spaced relation to each other, the members of each pair being separated by a gap, a shaft, contact members mounted on the shaft for engaging the conducting members, a reversible electric motor operatively connected with the

shaft and electrically controlled by the respective conducting members of every pair and by the respective contact members, the motor being adapted to be stopped with the shaft in a predetermined position by a selected contact member reaching the corresponding gap, and means to adjust the relative angular positions between the contact members and the corresponding gaps, to select predetermined stopping positions as close to each other angularly as desired.

27. An electric controlling apparatus comprising a plurality of pairs of conducting members mounted in spaced relation to each other, the members of each pair being separated by a gap, contact members for slidably and simultaneously engaging the conducting members, a reversible electric motor controlled by the respective conducting members of every pair and the corresponding contact member, means to produce by the motor relative movement between the conducting members and the contact members, the motor being adapted to be stopped by a selected gap being reached by the corresponding contact member in a predetermined position, and means to adjust the relative positions between the contact members and the corresponding gaps to select predetermined stopping positions as close to each other as desired.

28. An electric controlling apparatus comprising a plurality of control elements, each control element comprising a pair of conducting members separated by a gap and a contact member engaging the conducting members, a reversible electric motor, drive means operated by the motor for effecting relative movement between the conducting members and the contact members, switch means to energize a selected control element from a source of current, means to cause rotation of the motor in one or the other direction in response to the contact member of the selected control element engaging one or the other conducting member and to stop the motor by the contact member bridging the gap, said switch means comprising separate switch members for each conducting member of each control element and for a common lead from the source of current, the common switch member being adapted to be disconnected not later than the switches for the energized pair of conducting members.

29. An electric controlling apparatus comprising a pair of control elements, one element consisting of conducting members separated by a gap, the other element consisting of a contact member in the form of a flat piece rigidly supported at one end, means to effect relative movement between the elements, and a ball at the free end of the contact member, the contact member having means to retain the ball, the contact member being also constructed and arranged to resiliently urge the ball when at the gap simultaneously into contact with both conducting members.

30. An electric controlling apparatus comprising a pair of conducting members separated by a gap, a shaft rotatably mounted concentrically with the conducting members, a contact member mounted on the shaft extending to the conducting members for engaging the same, a motor, operative connections between the motor and the shaft, means to control the direction of rotation of the motor by the position of the contact member on one or the other of the conducting members and to stop the motor by the contact member bridging the gap, and a rounded projection at the end of the contact member, the contact member being adapted to be resiliently deflected by the rounded member engaging the conducting member.

31. An electric control apparatus comprising a pair of control elements, one element comprising conducting members separated by a gap, the other element comprising a contact member engaging the conducting members, a reversible electric motor, drive means operated by the motor for effecting relative movement between the control elements, the direction of the movement being controlled by the position of the contact member on one or the other of the conducting members, the motor being adapted to be stopped when the gap is reached by the contact member, and means to suppress hunting of the motor when the gap is reached by the contact member, said hunting-suppressing means comprising means to check said relative movement when the contact member reaches the gap and yieldable means for allowing overrunning of the motor by inertia when the gap is reached by the contact member.

32. An electric control apparatus comprising a pair of control elements, one element comprising conducting means, the other element comprising a contact member for engaging the conducting means, the conducting means having a neutral point; a reversible electric motor, drive means operated by the motor for effecting relative movement between the control elements, means to control rotation of the motor by the position of the contact member on one or the other side of the conducting means relatively of the neutral point, the motor being adapted to be rendered inoperative by the position of the contact member on the neutral point, and means to suppress hunting of the motor including frictional yieldable coupling for allowing the motor, when rendered inoperative, to overrun by inertia without displacing the contact member from the neutral point.

MICHEL M. YARDENY.