June 14, 1927. 1,632,112

C. BRAMMING

CONNECTER MEMBER

Filed Aug. 12, 1925

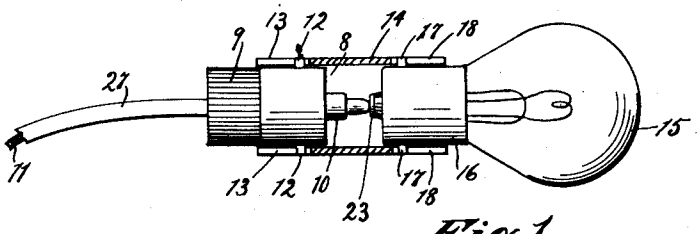

Fig. 1.

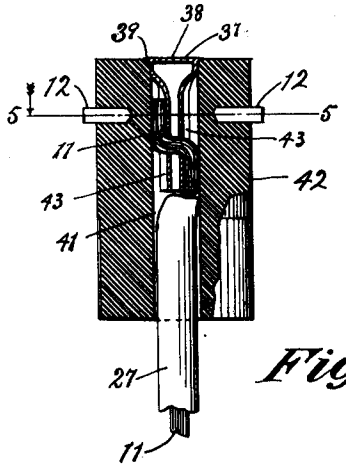

Fig. 4

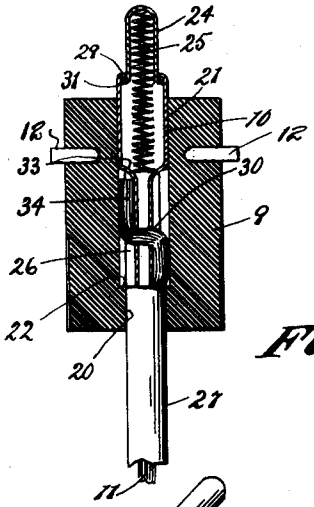

Fig. 2.

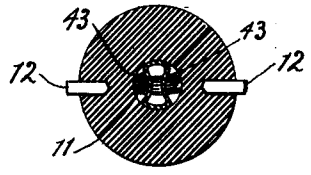

Fig. 5.

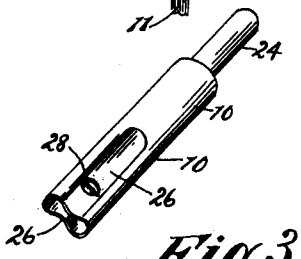

Fig. 3.

Inventor:
Carl Bramming

By Gillson, Mann & Cox
Atty's.

Patented June 14, 1927. 1,632,112

UNITED STATES PATENT OFFICE.

CARL BRAMMING, OF CHICAGO, ILLINOIS, ASSIGNOR TO ACCESSORIES MANUFACTURING COMPANY, A CORPORATION OF ILLINOIS.

CONNECTER MEMBER.

Application filed August 12, 1925. Serial No. 49,793.

This invention relates to electrical devices and more particularly to terminal connecters for electric circuits.

One of the objects of the invention is the provision of a connecter member that is provided with new and improved means for attaching the same to a flexible conductor without the aid of screws, solder or the like.

Another object of the invention is the provision of a terminal connecter that is provided with new and improved means for attaching the end of a conductor wire to the terminal plug or contact member in such a manner that the end of the wire is frictionally held in intimate contact with the terminal plug and in which the wire may be readily attached to said plug or detached therefrom.

Another object of the invention is the provision of a new and improved connecter member that is cheap to manufacture, easily assembled or disassembled, efficient in use, that may be attached to the end of a conductor wire in a minimum amount of time without the use of tools, screws, bolts or solder, and that is not likely to become broken or get out of order.

Other and further objects and advantages of the invention will appear from the following description taken in connection with the accompanying drawings, in which

Fig. 1 is a side elevation of an electric lamp showing the connecting sleeve in vertical section, with the invention in position therein;

Fig. 2 is a longitudinal section of the terminal and insulating plugs;

Fig. 3 is a perspective view of the terminal plug;

Fig. 4 is a longitudinal section of terminal and insulating plugs, showing a modified form of insulating plug; and

Fig. 5 is a section on line 5—5 of Fig. 4.

For simplicity of illustration and convenience in description the connecter member is shown as being associated with the end of a conductor and with an electric light bulb of the usual or any approved construction.

On the drawing, reference being had to Figs. 1 and 2, the reference character 8 designates the improved connecter member which comprises an insulating plug or member 9 and a terminal plug 10 which is adapted to be attached to one end of the conductor wire 11. The insulating plug 9 is provided with oppositely disposed studs or lugs 12 which are adapted to engage in bayonet slots 13 in one end of a metallic sleeve 14, as is usual in such constructions. An electric light bulb 15 having its base 16 provided with studs 17 for engaging in bayonet slots 18 in the outer end of the sleeve 14 in the usual manner, is also employed.

The insulating plug is provided with a bore 21 having the diameter of its inner end reduced as at 20 to form the shoulder 22. The terminal plug 10 is adapted to be inserted in the bore 21 with its inner end in engagement with the shoulder 22.

The outer end of the terminal plug 10 is provided with a slidable contact member 24 which is pressed outwardly by spring 25 and is adapted to engage the contact member 23 at the base of the bulb for making electrical contact and for holding the parts assembled in the sleeve 14 as is usual in such constructions.

The inner end of the terminal plug 10 is provided with oppositely arranged grooves 26 and with means for interlocking with the end of the conductor wire 11. This interlocking connection is of such a nature that the terminal plug after it has been interlocked with the end of the wire may be slidably inserted in the end of the insulating plug 9. Preferably a notch or opening 28 extending transversely through the inner end of the plug 10 from one groove 26 to the other, is provided which is adapted to receive the wire 11.

It has been proposed to provide terminal plugs that frictionally engage the bore or bores of the insulating plug, but in these devices the terminal wire has been looped through openings or notches in the inner end of the terminal plug instead of being provided with an offset, consequently more or less difficulty in inserting the plug is encountered, it not being feasible to pull the terminal plug into the bore of the insulating member by means of the conductor wire. It has also been proposed to provide the terminal wire with an offset, but in those cases screw-threaded members or other securing and clamping devices are employed to en-

gage the end of the conductor wire. This arrangement is also objectionable because of the extra parts necessary, and of the additional time required for assembling the device. The present invention overcomes these objections without sacrificing any of the advantages of a slip-joint connection. In the present device the assembling of the parts is simple and the connection between the terminal and the insulating plug is as strong as other parts of the wire.

In connecting the end of a conductor wire 11 to the insulating plug 9 the insulation 27 is stripped from the wire for a suitable distance, the bare wire is then placed in the opening 28 and the end and body portions of the wire given a sharp bend to form the connecting portion or shoulder 30 and the offset end 34. The offset end 34 extends forwardly and lies in the groove 26 on one side of the plug and the body of the conductor 11 lies in the groove 26 on the opposite side of the plug.

Preferably the insulation is left on the wire to a point adjacent to the end of the terminal plug, whereby the bare portion of the wire will lie within the grooves and will not be exposed at the inner end of the insulating plug.

In assembling the parts the conductor wire is threaded through the reduced end of the bore 21, the terminal plug 10 attached as described above, and by pulling on the wire 11 after positioning the end of the plug 10 in the outer end of the bore 21 the same may be pulled to position in the insulating member. The depth of the grooves 26 is such that when the plug 10 is pulled home the walls of the bore will force the conductor wire into intimate frictional contact with the plug thereby insuring a good electrical connection between said wire and plug. This is considered an important feature of the invention.

The terminal plug 10 may be of any suitable form. In the form of the device selected to illustrate one embodiment of the invention, the terminal plugs are formed from a tubular member the outer end of which may be spun over to form a flange 29 for engaging a retaining flange 31 on the inner end of the contact member 24 for retaining the same in said tubular member. The grooves 26 are formed in the wall of the tube by depressing said wall. The upper ends of the depressions form shoulders 33 against which the spring 25 abuts. By forming these plugs from tubular stock the cost of manufacture is not only greatly lessened, but the resiliency of the walls of the tube will permit the same to yield slightly beneath the wire when the plug 10 is inserted, thereby facilitating the insertion of the plug and at the same time insuring an exceedingly good electrical connection between the said plug and the conductor. The short bend in the wire where it passes through the opening 28 and the frictional resistance between the offset end and the walls of the insulating and terminal plugs will prevent the wire from becoming disengaged from the terminal plug regardless of the amount of force applied to the wire. This is also considered an important feature because it insures a good mechanical connection between the wire and the plug.

The form of the terminal plug shown in Figs. 4 and 5 differs from that just described in that a spring-pressed contact member is not employed. In this form of the device the inner end of the terminal plug 37 is provided with a head 38 extending beyond the tubular walls of the plug to form shoulders 39 for limiting the inward movement of said plug in the bore 41 of the insulating plug 42. This head constitutes the contact member for the terminal plug. The walls of the terminal plug 37 are depressed as at 43 to form channels or grooves for the reception of the conductor wire 11, and the parts assembled in the same manner, as previously described.

It is thought from the foregoing taken in connection with the accompanying drawings that the construction and operation of my device will be apparent to those skilled in the art, and that various changes in size, shape, proportion and details of construction may be made without departing from the spirit and scope of the appended claims.

I claim as my invention:

1. In combination, an insulating plug provided with a bore extending longitudinally thereof, a terminal plug slidably mounted in said bore, said plug comprising a body portion provided with grooves extending longitudinally thereof and having a transverse opening connecting the grooves, and a conductor wire threaded through said opening and frictionally engaging said grooves and the inner walls of said bore.

2. A terminal plug comprising a conductor member having a resilient portion provided with grooves at opposite sides thereof and having a transverse opening for the reception of a conductor wire.

3. A terminal plug comprising a conductor provided with a resilient portion having a transverse opening through one end thereof for the reception of the end of a wire conductor and a spring-pressed contact member in the opposite end thereof.

4. In combination, an insulating plug having a bore extending lengthwise thereof, a terminal plug slidably engaged in said bore, and a terminal wire having one end extending into said bore and provided with an offset, and means on said plug for engaging said wire between the body thereof and said offset for clamping the same against

said plug for connecting said wire to said terminal.

5. A terminal plug comprising a tubular member having a spring-pressed contact element on its outer end, the inner portion of said tubular member being provided with oppositely arranged grooves and with an opening extending from groove to groove through said member.

6. In combination, an insulating plug having a bore extending longitudinally thereof, a terminal conductor plug slidably mounted in said bore, said plug having an opening extending transversely therethrough, and a conductor wire extending through said opening in frictional engagement with the walls of said plugs.

7. In combination, an insulating plug having a bore extending longitudinally thereof, a terminal conductor slidably engaging in said bore, said conductor comprising a tubular member, a transverse opening therethrough and having its walls depressed to form grooves extending longitudinally thereof, one of said grooves extending inwardly from one end of said opening and the other extending outwardly from the other end of said opening, and a conductor wire having its body portion engaging in one of said grooves and bent to extend through said opening, and along the other groove.

8. In combination, a terminal member comprising a metallic element having a transverse opening through one end thereof, and provided with a resilient portion having a groove extending longitudinally thereof, and an electrical conductor wire having a portion extending through said opening and another portion extending along said groove.

9. In combination, an insulating plug having a bore extending longitudinally thereof, a terminal plug slidably engaging in said bore, said terminal plug comprising a resilient portion having an opening extending transversely thereof and having grooves extending in opposite directions from the ends of said opening, and a conductor wire having a portion extending through said opening and other portions lying in said grooves, the resiliency of said resilient portion of the terminal plug clamping the wire conductor against the inner wall of said insulating plug.

In testimony whereof I affix my signature.

CARL BRAMMING.