June 23, 1959 V. A. GALLOWAY 2,891,546

MALE URETHRAL FLUID-ABSORBING DEVICE

Filed Sept. 18, 1957

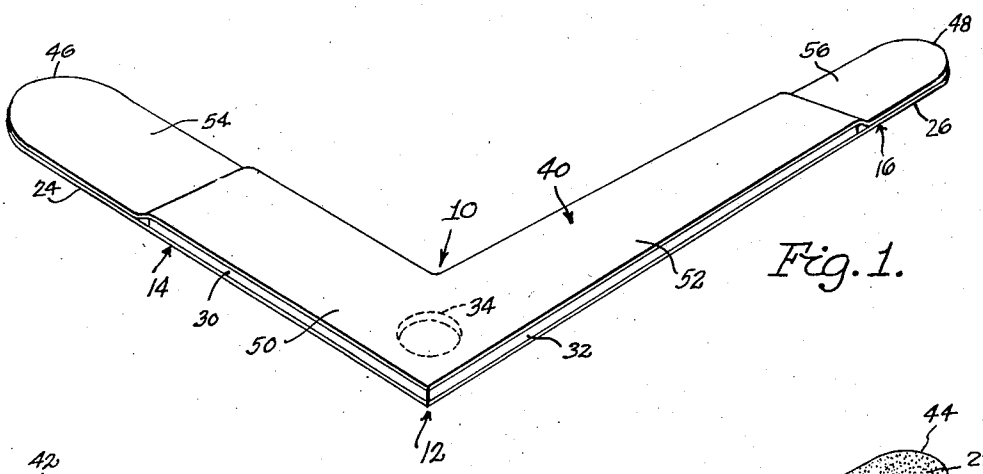

Fig. 1.

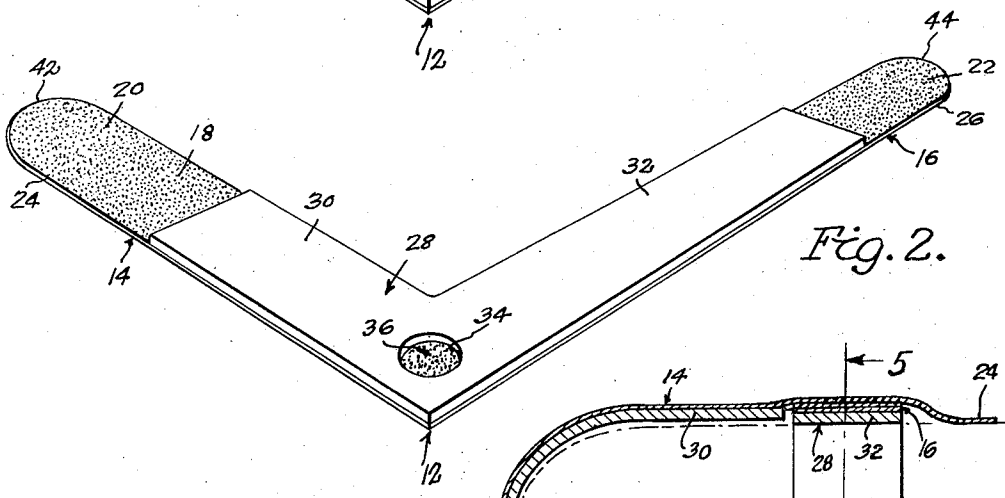

Fig. 2.

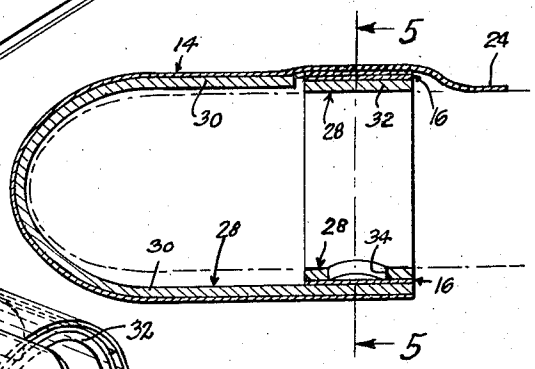

Fig. 3.

Fig. 4.

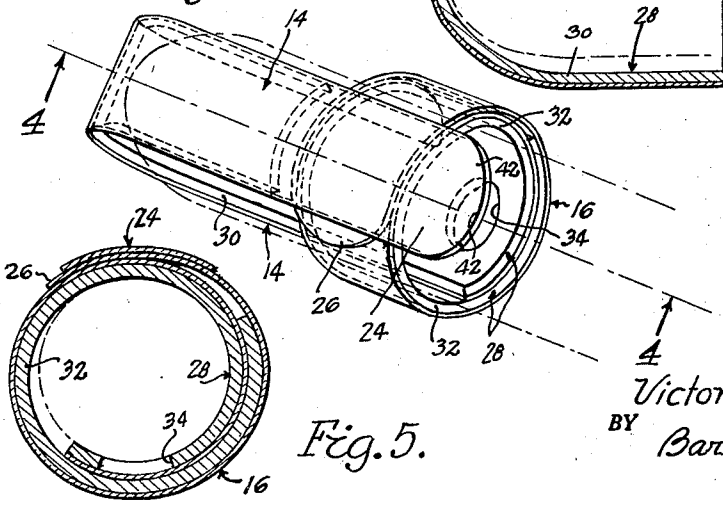

Fig. 5.

INVENTOR.
Victor A. Galloway
BY Barthel + Bugbee
Attys

United States Patent Office 2,891,546 Patented June 23, 1959

2,891,546

MALE URETHRAL FLUID-ABSORBING DEVICE

Victor A. Galloway, Grosse Pointe Woods, Mich.

Application September 18, 1957, Serial No. 684,697

6 Claims. (Cl. 128—295)

This invention relates to bandages and, in particular, to member-enclosing bandages.

Hitherto, men have been subject to annoyance and discomfort resulting from the fact that, after urination, small amounts of urine are retained in the urethra and descend seconds or even minutes later to the mouth thereof, soiling the clothing and sometimes, especially in summer, penetrating the outer garment. The present invention prevents such soiling by providing a device which is quickly and easily applied and which absorbs this remaining liquid without any chance of such soiling occurring.

Accordingly, one object of this invention is to provide a male urethral fluid-absorbing device which, when applied to the penis, absorbs any residue of urine remaining in the urethra after urination.

Another object is to provide a device of the foregoing character which is quickly and easily applied, which is comfortable to wear, light in weight and well ventilated, yet which can be partially unfolded to permit further urination and again applied.

Another object is to provide a device of the foregoing character which is inexpensive to manufacture, which can accordingly be sold at a low price and which, after use, is easily disposable.

Other objects and advantages of the invention will become apparent during the course of the following description of the accompanying drawings, wherein:

Figure 1 is a perspective view of a male urethral fluid-absorbing device, according to one form of the invention, shown in its unfolded and protected condition;

Figure 2 is a perspective view similar to Figure 1, but with the protective strip removed from the adhesive and absorptive portions of the device, which is thereby rendered ready for application;

Figure 3 is a perspective view of the device applied to the penis, the latter being indicated in dotted lines;

Figure 4 is a vertical longitudinal section taken along the line 4—4 in Figure 3; and

Figure 5 is a cross-section taken along the line 5—5 in Figure 4.

Referring to the drawing in detail, Figures 1 and 2 show a male urethral fluid-absorbing device, generally designated 10, according to one form of the invention as consisting of an approximately L-shaped mounting strip 12 with short and long longitudinal and lateral arms 14 and 16 respectively disposed substantially at right angles to one another and provided on its upper side with an adhesive layer or coating 18 having exposed adhesive portions 20 and 22 at the outer end portions 24 and 26 respectively of the arms 14 and 16. Intermediate the exposed adhesive-coated end portions 20 and 22, the adhesive layer 18 is covered by an approximately L-shaped fluid-absorptive pad or strip 28 having short and long longitudinal and lateral arms 30 and 32 somewhat shorter than the arms 14 and 16 upon which they are placed so as to leave the end portions 24 and 26 with their adhesive coatings 20 and 22 exposed. The pad 28 at the proximate meeting point of its arms 30 and 32 is provided with

an aperture 34 adapted to expose a small area or spot 36 of the adhesive layer 18.

The mounting strip 12 is made of any suitable and convenient material, crepe paper, cloth and plastic sheet material having been found satisfactory for this purpose. The adhesive layer 18 is preferably formed from so-called surgical pressure-sensitive adhesive which does not cause a rash or other irritation to the skin and which is available on the open market and well-known to those skilled in the adhesive art. The ordinary non-surgical commercial adhesives are unsatisfactory because the rubber and/or sulphur content thereof is irritating to the sensitive skin of certain persons. The absorptive strip 28 is preferably made from absorbent cotton cloth and both the mounting strip 12 and the absorptive strip 28 are conveniently stamped out of sheets of their respective materials without appreciable waste of such materials. Consequently, the costs of such materials are kept at a minimum per device.

The protective strip, generally designated 40, is of substantially the same size and shape as the mounting strip 12 and both such strips for convenience preferably have rounded ends 42, 44 and 46, 48 respectively fitting one another so that the adhesive portions 20 and 22 are effectively covered up before use. The protective strips 40, like the mounting strip 12 and absorptive strip 28, has short and long longitudinal and lateral arms 50 and 52 respectively with end portions 54 and 56 adapted to cover the otherwise-exposed adhesive portions 20 and 22, as well as covering the arms 30 and 32 of the absorptive strip 28. In this manner, the device 10 is kept sanitary and the adhesive layers 20 and 22 protected until the moment of use.

In the use of the invention, the device 10, protected by the protective strip 40 as shown in Figure 1, is conveniently packaged or individually carried in the pocket, its shape being convenient for this purpose. Before applying the device 10, the user inserts his fingernail beneath one end 46 or 48 of the protective strip 40 and peels off the latter from the adhesive-coated end portions 20 and 22 and from the absorptive strip 28, also exposing the adhesive spot 36 within the aperture 34. After urination, the user places the absorptive arm portion 30 near its junction with the arm portion 32 beneath the head of the penis with the aperture 34 and adhesive spot 36 immediately behind the head thereof, pressing upward upon the part of the mounting strip 12 beneath the adhesive spot 36 to cause the latter to adhere to the skin. This device is so located in this manner that the approximate mid-portion of the absorptive strip arm 30 is positioned at the mouth of the urethra when, after urination, the arm 30 is looped upward and rearward over the head of the penis.

After causing the adhesive spot 36 to adhere in the above-described manner with the longitudinal arms 14 and 30 extending longitudinally forward therefrom, the lateral arms 16 and 32 are thus positioned laterally or transversely of the penis, whereupon the user, while holding the longitudinal arms 14 and 30 in their longitudinal positions, winds the lateral arms 16 and 32 counterclockwise around the penis in the manner shown in Figure 3. He then loops the shorter longitudinal arms 14 and 30 upward and rearward over the head of the penis and brings the adhesive layer 20 of the end portion 24 of the short longitudinal arm 14 of the mounting strip 12 into adhesive engagement with the under side of the wound-around arm 16 of the mounting strip 12, as also shown in Figure 3, preferably with the end 42 overhanging the wound-around arm 16 to serve as a tab. As a result, any drops of urine remaining in the urethra and subsequently descending through its mouth are caught by and

absorbed in the absorptive portion of the arm 30 of the absorptive strip 28 and prevented from soiling the clothing. From Figure 3, it will be seen that the device 10 is open on its opposite sides near its outer end, so that the moist pad arm 30 soon dries out as a result of the ventilation thus provided.

If, subsequently, the user again wishes to urinate, he grasps the end portion 42 as a tab, lifts upward to detach the adhesive layer 20 of the end 24 of the mounting strip 12 from the wound-around portion of the arm 16 thereof, exposing the mouth and permitting urination, after which the absorptive arm 30 is reapplied in the foregoing manner. After final use, the device is easily disposed of by flushing it down an ordinary toilet.

What I claim is:

1. A male urethral fluid-absorbing device comprising an approximately L-shaped mounting strip of flexible sheet material having elongated longitudinal and lateral arms disposed approximately at right angles to one another, said arms having end portions with adhesive material thereon, and a pad member of fluid-absorptive material secured to one of said arms between its adhesive-equipped end portion and its junction with the other arm.

2. A male urethral fluid-absorbing device, according to claim 1, wherein an approximately L-shaped detachable protective strip is superimposed upon and detachably secured to said pad member and to the exposed adhesive-equipped portions of said mounting strip.

3. A male urethral fluid-absorbing device, according to claim 1, wherein the pad member is also approximately L-shaped and has a lateral extension secured to and extending along the lateral arm of said mounting strip.

4. A male urethral fluid-absorbing device, according to claim 3, wherein the lateral extension terminates short of the end of said lateral arm.

5. A male urethral fluid-absorbing device, according to claim 1, wherein the mounting strip adjacent said junction is provided with an exposed adhesive spot.

6. A male urethral fluid-absorbing device, according to claim 3, wherein an approximately L-shaped detachable protective strip is superimposed upon and detachably secured to said pad member and to the exposed adhesive-equipped portions of said mounting strip.

References Cited in the file of this patent

UNITED STATES PATENTS

2,678,649 Ghusn ---------- May 18, 1954

FOREIGN PATENTS

524,281 Belgium ---------- Nov. 30, 1953