Dec. 14, 1926. 1,611,058

W. NEWSOM

SAWMILL SET WORKS

Filed March 20, 1925 3 Sheets-Sheet 1

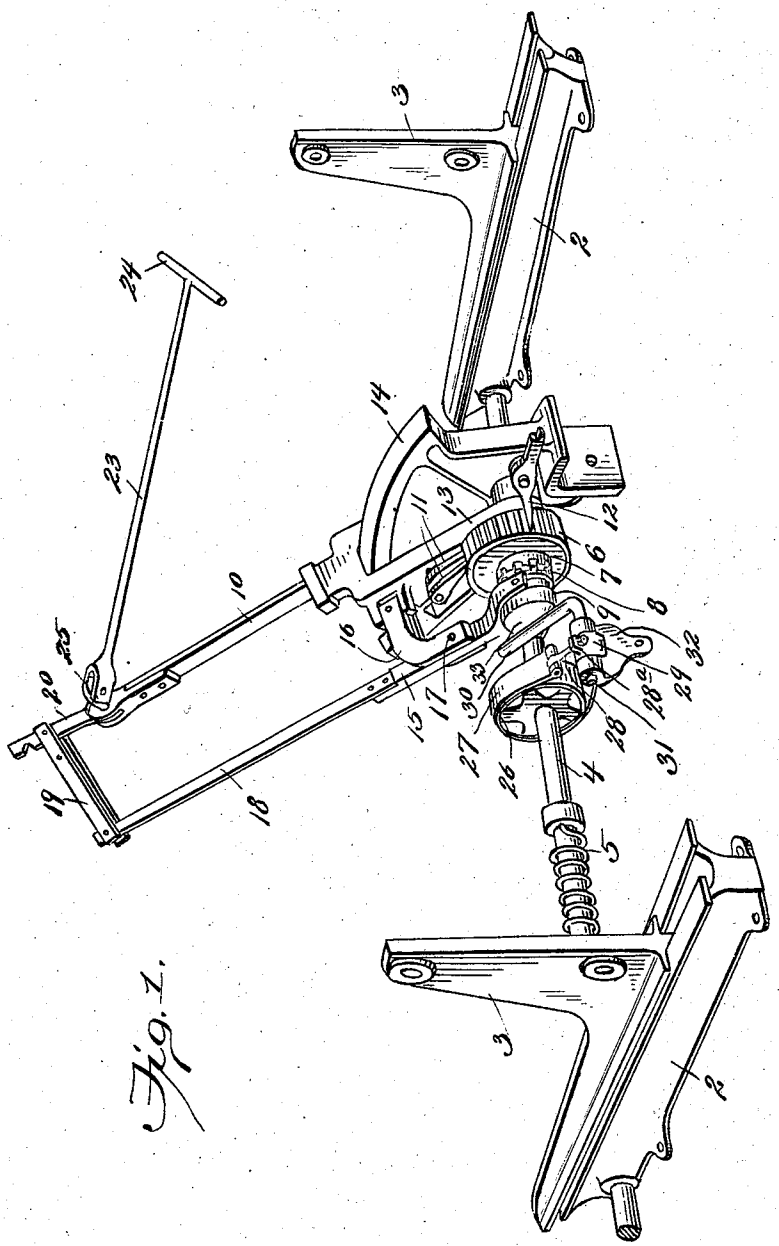

Fig. 1.

Inventor
Willard Newsom.

By Attorney

Dec. 14, 1926. 1,611,058

W. NEWSOM

SAWMILL SET WORKS

Filed March 20, 1925 3 Sheets-Sheet 2

Fig. 2.

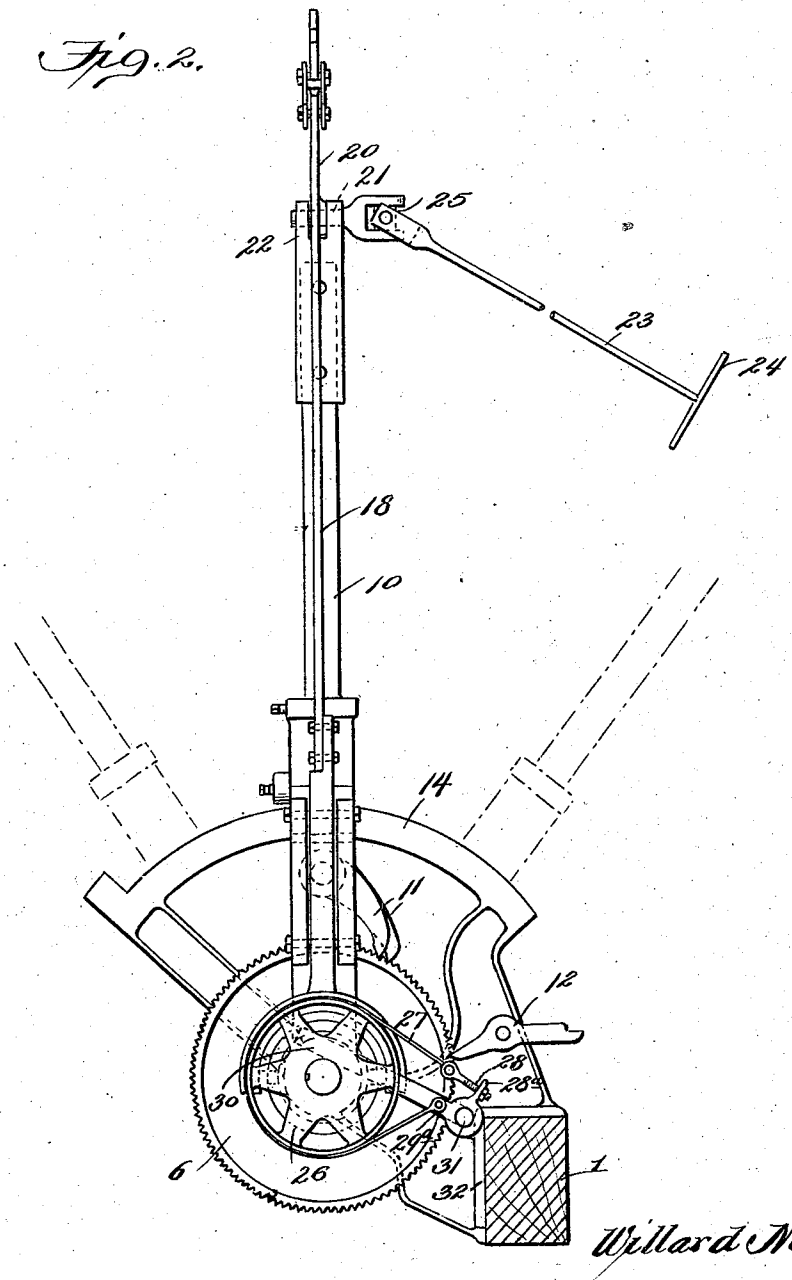

Inventor

Willard Newsom.

By James L. Norris

Attorney

Dec. 14, 1926. 1,611,058

W. NEWSOM

SAWMILL SET WORKS

Filed March 20, 1925 3 Sheets-Sheet 3

Fig. 3.

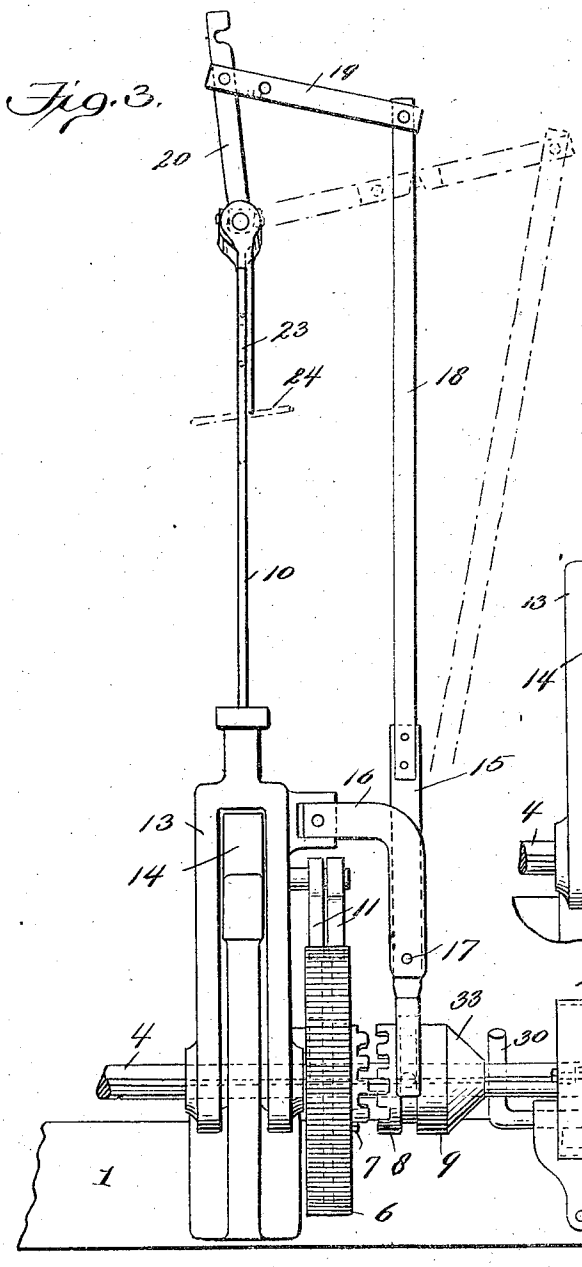

Fig. 4.

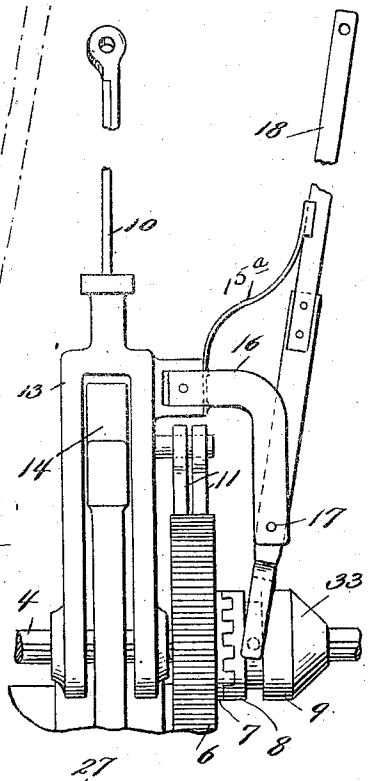

Inventor
Willard Newsom.

By Daniel L. Berry

Attorney

Patented Dec. 14, 1926. 1,611,058

UNITED STATES PATENT OFFICE.

WILLARD NEWSOM, OF MONTGOMERY, ALABAMA.

SAWMILL SET WORKS.

Application filed March 20, 1925. Serial No. 17,022.

The present invention relates to improvements in saw mill set works and it pertains more particularly to those of the type employing a spring for retracting the log-setting knees preparatory to the placing of the logs on the carriage.

The primary object of the invention is to provide novel and improved means for advancing the knees to set the log in position for each cut, for releasing the knees, and for controlling the recession of the knees under the action of the retracting spring, whereby these operations may be performed quickly and with facility by the sawyer or a single attendant while occupying his usual position at one side of the carriage. According to the preferred embodiment of the invention, a single control member, which constitutes the sawyer's lever, serves to advance the knees to set the log for the successive cuts, to trip or release the knees, and thus permit the spring to retract them, and to arrest or stop the knees when they have receded to the desired point.

To these and other ends, the invention consists in certain improvements and combinations and arrangements of parts, all as will be hereinafter more fully described, the features of novelty being pointed out particularly in the claims at the end of the specification.

In the accompanying drawings:—

Figure 1 is a perspective view of a set-works constructed in accordance with the preferred embodiment of the present invention;

Figure 2 represents an end elevation of the set-works as viewed from the left in Figure 1;

Figure 3 represents a side elevation of the set-works as viewed from the left in Figure 2; and

Figure 4 is a detail view of a part of the structure as shown in Fig. 3, illustrating a spring that may be employed in connection with the set-works.

Similar parts are designated by the same reference characters in the several views.

The present invention is applicable, generally, to the set-works of various types used in saw-mills, it being particularly applicable to set-works of the type wherein the log to be sawed is set for the successive cuts of the saw by successive actuations of a sawyer's lever which operates through ratchet mechanism to advance log-setting knees, and after the sawing of the log has been completed, the log-setting knees are released and retracted by a spring, following which the receding movement of the knees is arrested, so that they will be in position to receive another log.

In set-works of this type, as heretofore constructed, it has been necessary to disengage the ratchet pawls to permit retrograde movement thereof under the action of the retracting spring, it having been customary to place an operator on the carriage who disengaged the ratchet pawls, and it has been customary to employ a lever to control a brake whereby the receding movement of the knees was arrested at the desired point. Set-works constructed and operating in that manner are subject to the disadvantages that they require two operations or the use of both hands and are employed when the operator rides on the carriage, the operation and control of the set works is inconvenient, laborious, and involves loss of much time, and the ratchet mechanism is subject to rapid wear and early destruction. The present invention avoids all of these objections. It enables the knees to be advanced to set the log for each cut, it enables the log-setting knees to be released or disconnected from their advancing means, so that they may recede under the action of the retracting spring, and it enables the receding movement of the knees to be controlled and arrested at any desired point, by manipulation of a single control member which may be operated by the sawyer occupying his usual position at one side of the saw-mill carriage, or which may be operated with facility by an operator riding on the carriage. Moreover, the present invention avoids the necessity of disengaging ratchet pawls, and, hence, it eliminates the breakage of the pawls and the teeth on the ratchet wheels, all of these objections incident to such an operation being avoided.

In the present instance, 1 represents the rear longitudinal rail of the saw-mill carriage which carries the set-works. This carriage may be of any suitable construction. 2 designates the head block bases, such as those usually mounted on the upper side of the saw-mill carriage and serve to support the log at their forward ends. The log-setting knees 3 may be of the usual construction, they being mounted to slide on the head block bases 2 in a direction toward and

from the forward ends of the latter, it being understood that the usual reciprocating movements of the carriage carries the forward side thereof past the saw, and the forward movements of the knees 3 serve to feed the log resting on the members 2 toward the forward ends of these members so as to set the log for the successive cuts and that backward or receding movement of the knees, which is effected after one log has been completely sawed enables another log to be placed in position in front of them. A set shaft 4 having pinions thereon which mesh with racks on the under sides of the knees 3, as is commonly used on saw-mills, serves to advance and retract the knees in unison, and a retracting spring 5 is employed, one end of this spring being fixed to the set shaft, and the other end fixed to the carriage, this spring being similar to the retracting spring commonly used on saw-mills, it being wound to store power when the set-works is actuated to advance the knees, and the power stored in the spring serves to retract the knees when the set-works is released.

In the present embodiment of the invention, the set shaft is actuated in a direction to advance the knees by a ratchet wheel 6 which is rotatable freely or loosely on the set shaft, but may be connected thereto by a clutch which consists preferably of a jaw clutch member 7 which is fixed to one side of the ratchet wheel and a cooperative jaw clutch member 8 which is fixed to or forms a part of a collar 9, which latter is splined on the set shaft, so that it may be shifted to bring the clutch members 7 and 8 into engagement, at which time the ratchet wheel will be connected or fixed to the set shaft, and the collar 9 may be retracted to disengage the clutch members, at which time the set shaft is free to rotate, although the ratchet wheel 6 does not rotate except on forward motion of the knees 3. The ratchet wheel 6 is actuated to rotate the set shaft in a direction to advance the knees 3 and thereby set the log preparatory to each sawing operation by a lever 10 which is mounted to swing about the set shaft as a center and carries pawls which cooperate with the ratchet wheel.

The set works may be of either the single acting or double acting types, that shown being of the single acting type. the lever 10 carrying pawls 11 which are so positioned that they will operatively engage the teeth of the ratchet wheel and thereby cause the latter to rotate in unison with the lever 10 when the latter swings forwardly, and these pawls will ride idly over the ratchet wheel teeth when the lever 10 is swung rearwardly or in a reverse direction. A locking pawl 12 is arranged to cooperate with the teeth of the ratchet wheel to lock the latter against retrograde rotation, this pawl riding idly over the ratchet teeth while the ratchet wheel is being rotated by the forward swing of the lever 10. The lever 10 may be formed toward its lower end with a yoke 13 to straddle a sector 14 which is fixed to the carriage, and the lower ends of the yoke may be mounted to swing on the set shaft as a center. The sector 14 may be provided with graduated holes and a stop-pin, or with any other of the usual or suitable means for gauging or limiting the angle through which the lever 10 swings whereby the width of each cut made by the saw may be gauged. The ratchet pawls 11 and 12 provide for a forward rotation of the ratchet wheel, and they remain in engagement with the ratchet wheel, so that retrograde rotation of the latter does not take place.

The clutch collar 9 which controls the clutch which connects and disconnects the ratchet wheel and set shaft is, in the present instance, actuated by a lever 15, which may be guided to operate between a pair of plates 16 which project rigidly from one side of the yoke 13 of the lever 10, and a pivot 17 serves as an axis about which the clutch shifting lever 15 may swing, this lever swinging in a plane transverse to the plane in which the actuating lever 10 swings. A yoke 15ª on the lower end of the lever 15 engages a circumferential groove in the clutch shifting collar 9 and swinging movements of the lever 15 about its axis 17 serve to engage and disengage the clutch members 7 and 8. An extension 18 which is fixed on or forms a part of the lever 15 and which extends upwardly beside the actuating lever 10 is pivotally connected to one end of a toggle member 19, the other end of this toggle member being pivotally connected to a cooperating toggle member 20. The opposite end of the toggle member 20 is fixed to a stud shaft 21 which is rotatable in a bearing 22 provided on the upper end of the lever 10. By this arrangement, rotation of the shaft 21 in one direction will cause the toggle members 19 and 20 to be straightened, substantially as shown by the dotted lines in Figure 3, in consequence of which the fork on the lever 15 will shift the clutch collar 9 in a direction to engage the clutch members 7 and 8, whereas rotation of the shaft 21 in a reverse direction will flex the toggle members substantially into the full line position shown in Figure 3, the fork on the lever 15 then acting to shift the clutch collar 9 in a direction to disengage the clutch members 7 and 8. The shaft 21 is preferably utilized not only to actuate the clutch collar through the toggle members 19 and 20, but also as a means of swinging the set-works-actuating lever 10. For this purpose, it is operatively connected to a lever or rod 23 which extends toward the front of

the carriage and is preferably provided with a handle 24 to facilitate its manipulation, this lever or rod serving as the sawyer's lever which may be manipulated by him while occupying his usual position at the front of the carriage. A universal joint 25 is preferably used to connect the lever 23 to the shaft 21, this universal joint enabling the lever 23 to be reciprocated to actuate the lever 10 and rotated to actuate the toggle members with facility.

A brake is employed to arrest the rotation of the set shaft under the action of the receding spring 5, so that the knees may be positioned as the sawyer desires, to receive the next log. As shown, a brake drum 26 is fixed on the set shaft and a brake band 27 cooperates with this drum. One end of the brake-band is attached, as by a threaded or adjustable anchor member 28, to an arm or lug 28^a projecting radially from a casting 29 which is keyed on the shaft 31 of a brake-setting lever 30, while the opposite end of the brake-band is connected to a radially-projecting lug 29^a on the casting 29. The shaft 31 is pivoted to rotate in a suitable stationary bracket 32, and the brake-setting lever 30 is arranged in the path of a tapered or conical portion 33 formed on the clutch shifting collar 9. By reference to Figure 3, it will be noted that the brake-setting lever 30 is out of contact with the conical portion 33 of the clutch shifting collar when the latter is shifted sufficiently to disengage the clutch members 7 and 8, the clutch shifting collar being then in a neutral position, but a further shifting of the collar 9 in a direction away from the ratchet wheel 6 will bring the conical portion 33 of the collar 9 into engagement with the brake-setting lever 30 and the latter is thereby caused to ride up on the conical portion 33 as the result of which the lever 30 is swung upwardly or away from the set shaft, and in consequence, the brake band 27 is caused to frictionally grip the brake drum 26. However, when the clutch shifting member 9 is in either its neutral position or its clutch-engaging position, the brake-setting lever 30 will be in its normal lower position, and the brake band 27 will be in released relation with the brake drum. It will be understood that the construction just described enables the receding movement of the knees to be arrested by the setting of the brake on the set shaft and that the setting of this brake may be accomplished through the clutch collar shifting lever 15 and the toggle members 19 and 20 through rotation of the lever or rod 23, which is connected to the shaft 21, the brake being set by rotating the lever 23 to an extent greater than that required to disengage the clutch members 7 and 8 by bringing the clutch shifting collar into the neutral position, this further rotation of the lever 23 acting to bring the toggle members 19 and 20 into a doubled or folded relation, so that the toggle member 20 extends toward the left in Figure 3.

The mode of operation of the set-works constructed in accordance with the present embodiment of the invention is as follows: Assuming that the knees 3 have been receded to receive a log at their forward ends and that the log is ready to be advanced, the lever or rod 23 is rotated until the toggle members 19 and 20 have passed through their straightened position which locks them and keeps the clutch members 7 and 8 from separating, the ratchet wheel 6 being then coupled to the set shaft 4. The conical end 33 of the clutch shifting collar 9 will then be out of engagement with the brake lever 30, so that the brake is released. With the parts in this condition, a forward pull of the lever or rod 23, which will cause a forward swing of the lever 10, serves to advance the knees to set the log for the next cut, the ratchet pawls 11 which swing forwardly with the lever 10 engaging the ratchet wheel 6 and thereby serving to rotate it and the set shaft which is coupled thereto. The locking pawl 12 during this operation will ride idly over the teeth of the ratchet wheel. The operation just described, is repeated preparatory to each cut until the log has been completely sawed up. In order to recede the knees which are then at or near the forward edge of the carriage, and thus enable another log to be placed in front of them, the lever or rod 23 is rotated to bring the toggle members 19 and 20 substantially into the full line position shown in Figure 3. This operation of the lever 23 brings the clutch collar 9 into its neutral position so that the clutch members 7 and 8 are disengaged, and while the ratchet wheel 6 is held against retrograde rotation by the locking pawl 12, the set shaft 4 is free to revolve under the action of the receding spring 5 and in a direction to recede the knees. When the knees have reached the desired point in their recession, the lever or rod 23 is rotated to a further extent in the same direction, whereby the toggle link 20 is swung toward the left from the full line position shown in Figure 3, and the conical portion 33 of the clutch collar is thus brought into engagement with the brake-setting shaft 30, causing the latter to be raised or shifted in a direction to set the brake band 27 on the brake drum 26, further rotation of the set shaft being thereby arrested. Reverse rotation of the lever or handle 23 until the toggle members 19 and 20 are carried through their straightened position into their locked position, as indicated by the dotted lines in Figure 3, serves to release the brake and to re-engage the clutch members 7 and 8, and the set-works is then in condi-

tion for operation to effect the successive settings of the log for the sawing operations thereon.

A spring 15ª may be fixed to the side of the yoke 13 and arranged to bear at its free end against the adjacent side of the lever 18, as shown in Fig. 4, this spring serving to hold the clutch member 8 in engagement with the clutch member 7. When the set-works is operated by an attendant riding on the carriage, the toggle members 19 and 20 and the lever 23 may be omitted, the clutch members being then disengaged by manual movement of the lever 18 toward the left in this figure, and the spring 15ª will serve to hold the clutch members in engagement when the lever 18 is moved toward the right in this figure.

By providing a structure whereby the operations of actuating the set-works to set the knees, releasing the knees to permit their recession and arresting the receding movement of the knees may be performed or controlled by manipulation of a single lever or member, the set-works may be operated entirely by the sawyer while he occupies his usual position in front of the carriage, thereby avoiding the necessity of employing more than one attendant for the operation thereof. Moreover, by enabling these operations to be performed by manipulation of a single lever or member, such operations may be performed more easily and with less loss of time.

As the present invention renders it unnecessary to disengage the ratchet pawls from the ratchet wheel in order to permit the knees to recede, the operation of releasing the setworks is facilitated and rapid wear of the ratchet mechanism is avoided.

I claim as my invention:—

1. In a saw-mill set-works comprising log-setting knees, a set shaft for advancing them, and means acting on the set shaft to recede the knees, means embodying a common controlling member for actuating the set shaft to advance the knees and for arresting operation of the set shaft during recession of the knees.

2. In a saw-mill set-works comprising log-setting knees and a set shaft for advancing and receding them, means embodying a common controlling member for actuating the set shaft to advance the knees, for releasing the set shaft to permit recession of the knees and for arresting the recession of the knees.

3. In a saw mill set works comprising log-setting knees, and a set shaft for advancing them, the combination of actuating means cooperative with the set shaft to advance the knees, means for disconnecting the actuating means to permit recession of the knees, means for arresting the receding operation of the set shaft, and a member movable in one direction to operate said actuating means and movable in another direction to operate said disconnecting means and to control said arresting means.

4. In a saw mill set works comprising log-setting knees and a set shaft for operating them, the combination of actuating means for the set shaft including a ratchet wheel and cooperative pawls, means for connecting and disconnecting the ratchet wheel with respect to the set shaft, means for arresting the receding operation of the set shaft, and a member reciprocable to operate said actuating means and rotatable to actuate said connecting and disconnecting means and to control said arresting means.

5. In a saw-mill set-works comprising log-setting knees and a set shaft for operating them, the combination of means including a ratchet wheel and cooperative pawls for actuating the set shaft to advance the knees, means for connecting and disconnecting the ratchet wheel with respect to the set shaft while the pawls remain engaged with the ratchet wheel, and a member movable in one direction to operate said actuating means to advance the knees and movable in another direction to operate said connecting and disconnecting means.

6. In a saw-mill set-works comprising log-setting knees and a set shaft for operating them, the combination of a ratchet wheel loosely mounted on the set shaft, a lever and pawls for rotating and locking the ratchet wheel, a clutch for connecting and disconnecting the ratchet wheel with respect to the set shaft, and a member reciprocable to operate said lever and rotatable to operate said clutch.

7. In a saw-mill set-works comprising log-setting means and a set shaft for operating them, the combination of a ratchet wheel loosely mounted on the set shaft, actuating and locking pawls cooperative with the ratchet wheel, a clutch for connecting and disconnecting the ratchet wheel and set shaft, and means operative by a single controlling member for operating the actuating pawls to advance the set shaft and the clutch to connect and disconnect the ratchet wheel and set shaft.

8. In a saw mill set works comprising log-setting knees, a set shaft for operating the knees, means for actuating the set shaft to advance the knees, a clutch for disconnecting said actuating means from the set shaft to permit recession of the knees, a spring for causing recession of the knees, and a brake for stopping the recession of the knees, means embodying a common controlling member for operating the set shaft actuating means to advance the knees, and for operating said clutch to disconnect the actuating means from the set shaft and to set the brake to stop recession of the knees.

9. In a saw mill set works comprising log-setting knees, a set shaft for operating them, a spring acting on the set shaft to recede the knees, and a brake for arresting the receding operation of the set shaft, the combination of actuating means for operating the set shaft to advance the knees, means for connecting and disconnecting the actuating means with respect to the set shaft, and a common controlling member for operating the actuating means and for controlling the connecting and disconnecting means and the brake.

10. In a saw-mill set-works comprising log-setting knees and a set shaft for operating them, the combination of actuating means for operating the set shaft to advance the knees, means including a movable clutch member for connecting and disconnecting the actuating means with respect to the set shaft, a brake for the set shaft controlled by the movement of said clutch member, and controlling levers for said actuating means and clutch member mounted to swing in unison.

11. In a saw-mill set-works comprising log-setting knees and a set shaft for operating them, the combination of actuating means for operating the set shaft to advance the knees, means including a movable member for connecting and disconnecting said actuating means with respect to the set shaft, means acting on the set shaft to retract the knees, a brake for arresting the operation of the set shaft and controlled by said movable member, and controlling levers for said actuating means and movable member mounted to swing in unison about a common center.

12. In a saw-mill set-works comprising log-setting knees, a set shaft for operating them, and a spring acting on the set shaft for receding the knees, the combination of actuating means for operating the set shaft to advance the knees, a clutch for connecting and disconnecting the actuating means with respect to the set shaft, a brake for stopping the receding operation of the set shaft, and a common control member for operating said actuating means to advance the set shaft and for operating the clutch and brake.

13. In a saw-mill set-works comprising log-setting knees and a set shaft for operating them, the combination of actuating means embodying a wheel loosely mounted on the set shaft, a clutch for connecting and disconnecting said wheel relatively to the set shaft and including a movable clutch member, a spring acting on the set shaft to retract the knees, a brake for arresting rotation of the set shaft under the action of said spring, the brake having a setting member which is actuated by said clutch member when the latter is moved into clutch disengaging position, and controlling levers for said actuating means and clutch member pivoted co-axially and connected to swing in unison, one of said levers being also movable laterally relatively to the other lever.

14. In a saw-mill set-works, the combination of log-setting knees, a set shaft for operating them, a ratchet wheel and cooperating pawls for actuating the set shaft to advance the knees, a clutch for connecting and disconnecting the ratchet wheel with respect to the set shaft, a brake for controlling the receding operation of the set shaft, levers for operating the pawls, clutch and brake, said levers being mounted to swing in unison during actuation of the set shaft and one of said levers being movable relatively to the other lever to operate the clutch and brake, and means including a common operating member for causing said levers to swing in unison or for causing one of said levers to move relatively to the other lever.

15. In a saw-mill set-works, the combination of a set shaft for actuating the log-setting knees, a ratchet wheel for rotating the set shaft, a clutch for connecting and disconnecting the ratchet wheel with respect to the set shaft, a brake for controlling the recession of the knees, a pair of levers, one lever having pawl means to cooperate with the ratchet wheel and the other lever controlling said clutch and brake, and toggle-means connecting said levers and operative to engage and disengage said clutch and apply and release the brake and to lock the clutch in engaged condition.

16. In a saw mill set works, the combination of a set shaft for operating the log-setting knees, a ratchet wheel and cooperating pawl mechanism for rotating the set shaft to advance the knees, a clutch for connecting and disconnecting the ratchet wheel with respect to the set shaft, a brake for controlling the recession of the knees when said clutch is in disconnected condition, coaxially pivoted levers connected to swing in unison for actuating said pawl mechanism and for disengaging the clutch and applying the brake, and a spring for holding the clutch in engaged condition and for holding the brake in released condition.

In testimony whereof I have hereunto set my hand.

WILLARD NEWSOM.