July 6, 1926. 1,591,034

H. F. GEORGE

ARMORING MEANS

Filed Feb. 6, 1922 3 Sheets-Sheet 1

Fig. 1

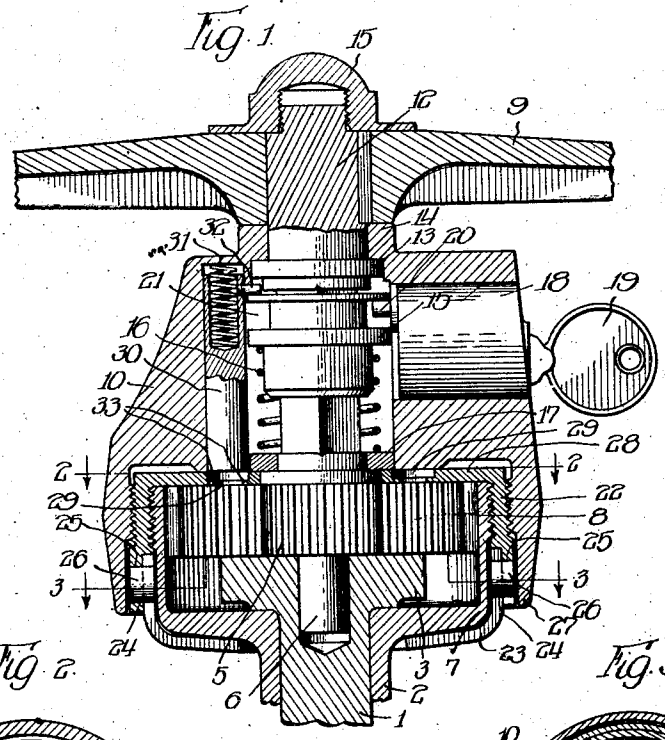

Fig. 2

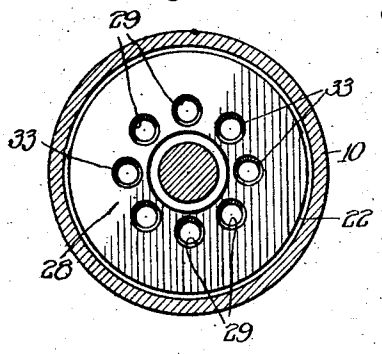

Fig. 3

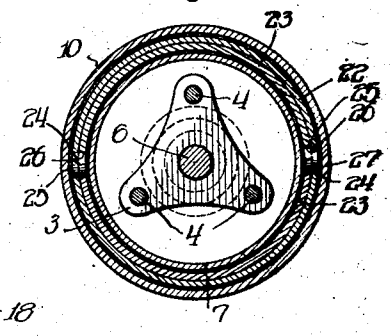

Fig. 4

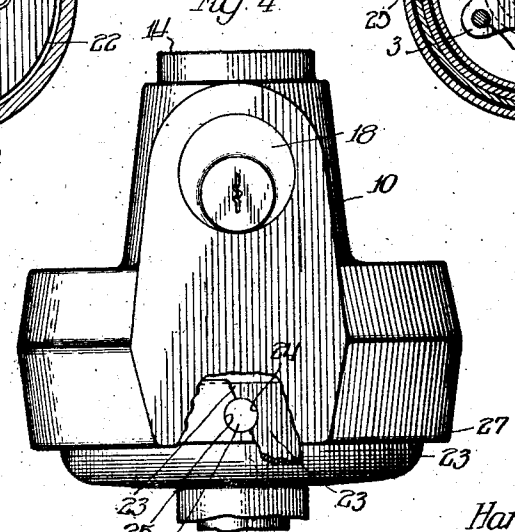

Witness:
R. Burkhardt.

Inventor:
Harry F. George,
By Wilkinson, Huxley, Byron & Knight attys.

July 6, 1926. 1,591,034

H. F. GEORGE

ARMORING MEANS

Filed Feb. 6, 1922 3 Sheets-Sheet 2

Fig. 5

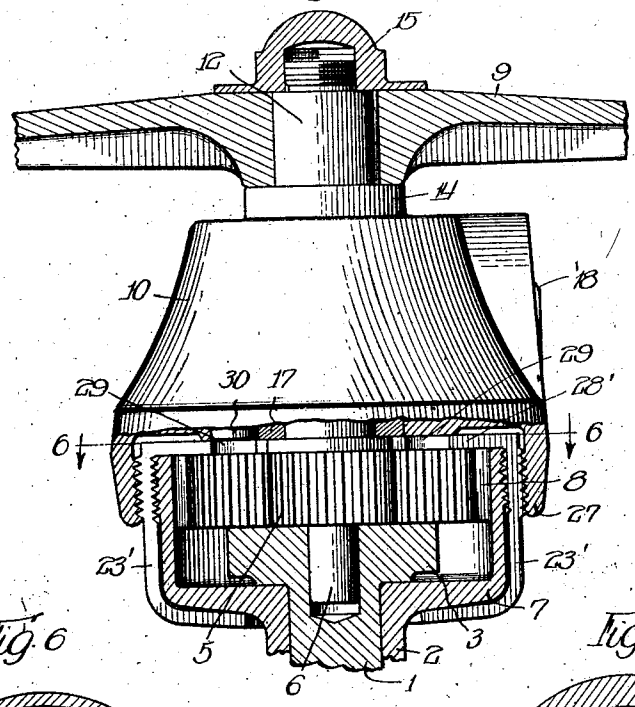

Fig. 6

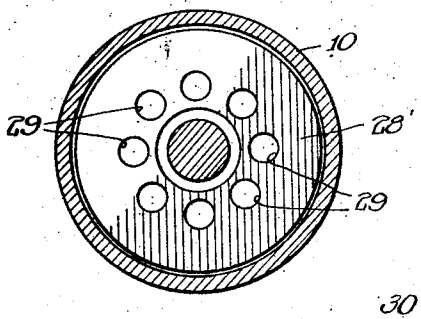

Fig. 8

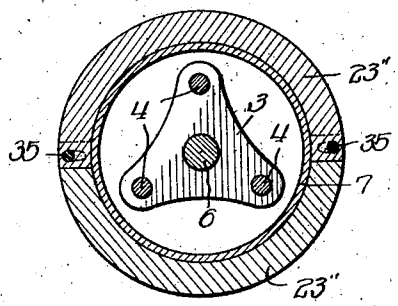

Fig. 7

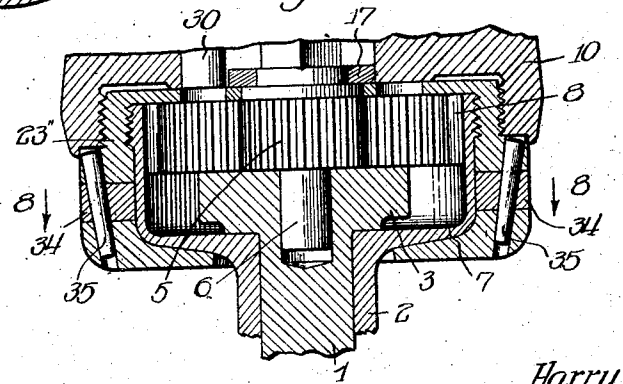

Witness:
A. Burkhardt

Inventor:
Harry F. George,
By Wilkinson, Huxley, Byron & Knight. attys.

July 6, 1926. 1,591,034

H. F. GEORGE

ARMORING MEANS

Filed Feb. 6, 1922 3 Sheets-Sheet 3

Fig. 9.

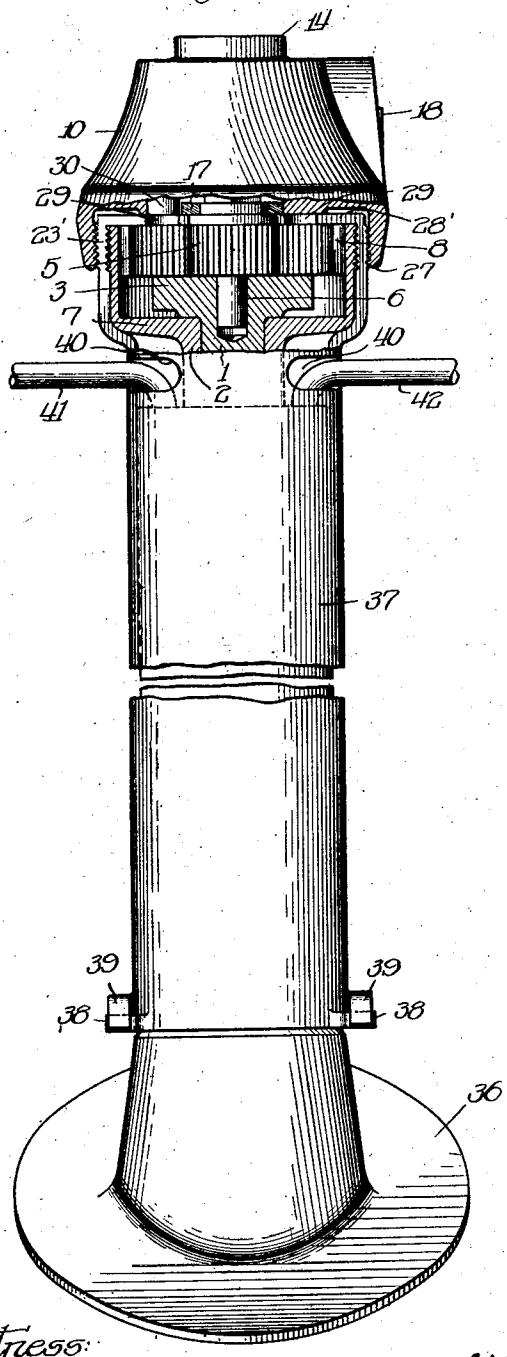

Fig. 10.

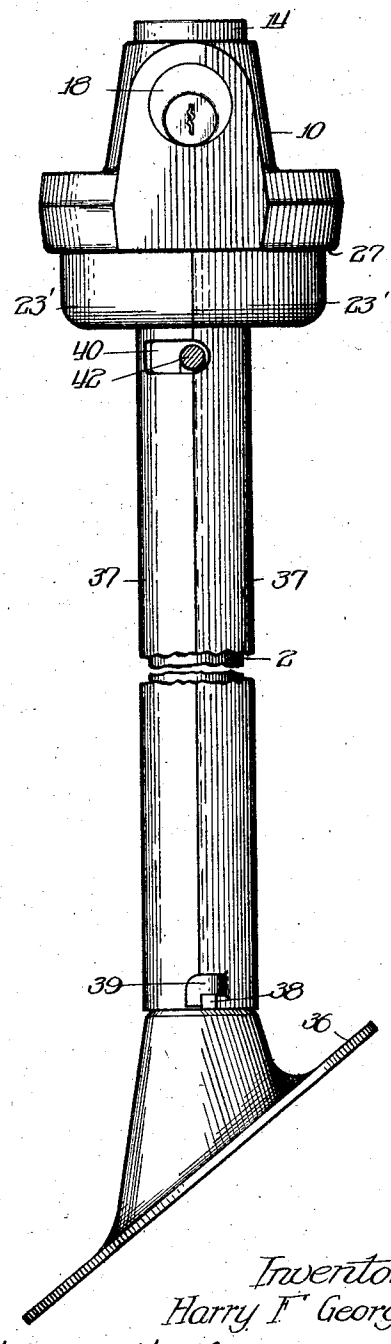

Witness:
R. Burkhardt

Inventor
Harry F. George,
By Wilkinson, Huxley, Byron & Knight Attys.

Patented July 6, 1926. 1,591,034

UNITED STATES PATENT OFFICE.

HARRY F. GEORGE, OF CHICAGO, ILLINOIS.

ARMORING MEANS.

Application filed February 6, 1922. Serial No. 534,369.

The present invention relates to armoring means.

More particularly the present invention relates to armoring means for the locking devices of motor cars and will be described in connection with motor cars of the Ford type, being very useful in that connection. Various means have been devised and are being used for locking motor cars by controlling the operativeness of the steering connection between the steering wheel and the steering post. Many of these devices fail to baffle thieves for the reason that their locking devices are not armored and thieves, by more or less simple expedients, are able to completely nullify the effect of the locking means. Referring particularly to motor cars of the Ford type, the effect of the locking mechanisms has frequently been nullified by attacking the cup-shaped member which lies at the top of the steering column, which cup-shaped member contains planetary gearing for transmitting steering motion from the steering wheel to the steering post.

An object of the present invention is to provide armoring means for the locking mechanism of motor cars which will effectively baffle thieves in their attempts to nullify the effect of the locking mechanism without manipulating the lock.

A further object is to provide armoring means applicable to cars of the Ford type which may be readily assembled or disassembled without the use of special tools and without requiring any but a minimum of mechanical discretion.

A further object is to provide armoring means which will so baffle a thief that unless he is skillful enough to pick the lock or otherwise open same by direct manipulation, he will actually have to wreck the car before he can nullify the effect of the locking mechanism.

Further objects will appear as the description proceeds.

Referring to drawings:—

Figure 1 represents in section one embodiment of the present invention, the section being taken along the longitudinal axes of the steering column;

Figure 2 is a sectional view taken along the line 2—2 of Figure 1;

Figure 3 is a sectional view taken along the line 3—3 of Figure 1;

Figure 4 is a side elevation taken at right angles to the plane illustrated in Figure 1, parts being broken away to better illustrate the mechanism;

Figure 5 is a view similar to Figure 1 illustrating a modified embodiment;

Figure 6 is a sectional view taken along the line 6—6 of Figure 5;

Figure 7 is a view similar to Figure 5 illustrating another embodiment of the present invention;

Figure 8 is a view taken along the line 8—8 of Figure 7;

Figure 9 is a view in elevation, parts being broken away, showing a modified construction wherein the entire steering column is protected;

Figure 10 is a view in side elevation of the structure illustrated in Figure 9.

Referring first to Figures 1 to 4, the steering post of a motor car is indicated by the numeral 1, which steering post is encased within the steering column 2. The steering post 1 has mounted at its upper end the spider 3, which may be provided with upstanding studs 4—4 which provide bearings for planetary gears (not shown). Mounted axially of the steering post 1 is the sun gear 5, which may have an axially extending stud 6 adapted to ride in the corresponding bore in the steering post 1. The steering column 2 is provided at its upper end with the cup-shaped member 7, which is provided with an internal gear 8. The planetary gears (not shown) are adapted to mesh with the internal gear 8 and to communicate steering motion from the sun gear 5 to the spider 3 and the steering post 1. The numeral 9 indicates a steering wheel. Steering motion may be communicated from the steering wheel 9 to the steering post 1 through mechanism which will presently be described. The cup-shaped member 7 carries a cap 10, which provides a housing for the connecting means between the steering wheel 9 and the sun gear 5, together with locking mechanism for controlling the effectiveness of said connecting means. As will appear hereinafter, certain novel means are provided between the cap 10 and the cup-shaped member 7, which means constitute mounting means for said cap.

The present invention is applicable to a very great number of different types of car locking mechanism. The particular mechanism chosen for illustration herein includes

a coupling member which is adapted to be moved in response to a lock for the purpose of coupling and uncoupling the steering wheel 9 from the sun gear 5. Said sun gear 5 is provided with an upstanding stud 11, of angular cross section. The steering wheel 9 is keyed to a shaft 12, which has a shoulder 13 adapted to abut against a corresponding shoulder 14 on the inner side of the cap 10. A nut 15 threaded upon the upper end of the shaft 12 and overlapping the steering wheel 9 will co-operate with the shoulder 13 to hold the steering wheel against axial movement relative to the cap 10, though permitting free rotative movement of said steering wheel. The shaft 12 may be provided with a portion corresponding in cross section to the stud 11. The coupling member 15 is provided, which should have a bore corresponding to the cross sectional outlines of shaft 12 and stud 11. It will be clear that when the coupling member 15 is in a position to encase both shaft 12 and stud 11, an operative connection will be had between the steering wheel 10 and sun gear 5. However, when the coupling member 15 is moved so that it is free of the shaft 12, an operative driving connection between the steering wheel and the sun gear 5 is broken. A spring 16 may be provided for urging the coupling member 15 to coupling position, one end of said spring abutting against said coupling member 15 and the lower end thereof abutting against the washer 17, which in turn is mounted upon certain parts of the armoring mechanism which will presently be described.

Mounted in the cap 10 is the lock 18, which may be provided with a key 19 and which has a stud 20 lying within a groove 21 in the coupling member 15. The stud 20 is capable of a vertical movement in response to movement of the key 19. When it is desired to lock the car, the key 19 will be manipulated to cause the stud 20 to force the coupling member 15 downwardly to uncoupling position. The lock 18 will hold the coupling member 15 in this uncoupling position against the tension of the spring 16. When it is desired to unlock the car, the key 19 may be turned in the lock and the spring 16 will urge the coupling member 15 upwardly. A slight turn of the steering wheel 9 will insure proper coupling of shaft 12 with the stud 11.

The cup-shaped member 7 is screw-threaded on its outside. Mounted on said cup-shaped member 7 is a ring-shaped member 22 which may be described as an inverted cup and which has internal screw-threads adapted to engage with the external screw-threads on the cup-shaped member 7. Said inverted cup is provided with a central aperture for receiving the upstanding stud 11 of the sun gear 5. The inverted cup 22 is externally screw-threaded to engage with corresponding internal screw-threads on the cap 10. It will be clear that the cap 10 is carried by the cup-shaped member 7 through the intermediate mounting comprising the half rings 22—22, said cap 10 being screw-threaded upon said half rings.

Protecting the under side of the cup-shaped member 7 are a pair of half rings 23—23, which have upstanding side walls and inwardly extending bottom portions whereby when they are mounted together they form an assembly resembling a cup, the bottom portion of which is provided with a hole for receiving the steering column 2. The ends of the half rings 23—23 may be provided with semi-circular recesses 24, which, when the half rings are assembled, form circular apertures, which correspond to similar apertures 25 in the inverted cup 22. When the half rings 23—23 are in assembled position they will lie within the inverted cup 22, with the semi-circular apertures 24—24 lying in coincidence with the apertures 25—25 of the inverted cup 22. When the parts are in this position, the cap 10 being removed, pins 26 may be inserted. It will be clear that as long as the pins 26—26 occupy the positions just described, the half rings 23—23 will be securely held in place. After the pins 26—26 have been inserted, the cap 10 may be screwed down upon the inverted cup 22, in which position the cap 10, by reason of its depending skirt 27, will hold the pins 26—26 in place.

The inverted cup 22 has the portion 28 lying at an angle normal to the axis of the steering post 1. As noted above, the portion 28 has the central hole for the reception of the stud 11. Surrounding said central hole are a plurality of spaced holes 29. The construction of inverted cap 22 having the holes 29—29 has a function which will now be referred to. Mounted in parallelism with the axis of the steering post 1 is the vertically reciprocable abutment member 30, which is normally urged downwardly by means of the spring 31. The abutment member 30 has the outstanding stud 32 adapted to engage with the coupling member 15. When said coupling member 15 is in its uppermost, i. e., coupling position, the abutment member 30 will be held in its uppermost position. When the coupling member 15 is moved to its lowermost, i. e., uncoupling position, the spring 31 will be permitted to move the abutment member 33 downwardly to occupy a position within one of the holes 29—29. When the coupling member 15 is in its lowermost position, that is to say—when the car is locked, the unscrewing of the cap will be effectually prevented, even though the abutment member 30 did not

strike one of the holes 29'—29' when the car was first locked. Any turning movement of the cap 10 will cause said abutment member to snap into one of said holes 29'—29'. The abutment member 30 may be allowed to occupy a position between the planetary gears (not shown) when the car is in locked condition, or said abutment member 30 may be stopped in a position clear of said gears, whereby no interference will be had with movement of the front wheels of the motor car, when, as for instance, in cases of emergency, it is desired to push the car and steer same by manipulating the front wheels directly. For this purpose any preferred kind of stop for the abutment member 30 may be used. According to the drawings, the holes 29'—29' are of the countersunk variety, leaving portions 33, which prevent the passage of the abutment member 30 to a position in the path of the planetary gears.

The cap 10 and the half rings 23'—23' should be of hardened steel or other tool resisting material, thereby completely armoring the cup-shaped member 7 and the locking means. It will be impossible to get into the cup-shaped member and the coupling mechanism except by way of the lock 18. The inverted cup 22 may be readily screw-threaded upon the cup-shaped member 7, and the half rings 23—23 may be readily mounted in place, after which the pins 26—26 will be inserted. The cap 10 may then be screwed down upon the inverted cup 22 so that the skirt 27 of said cap 10 will overlie and protect the pins 26. A complete enclosure is had, which is readily assembled, and which may not be disassembled except when the car is in unlocked condition. At this time disassembly may be as readily accomplished as assembly is accomplished.

The modification illustrated in Figures 5 and 6 differs from the parts previously described in certain particulars which will now be referred to. According to the disclosure in Figure 5, the cup-shaped member 7 is provided with a pair of half rings 23'—23', which are both internally and externally screw-threaded. The internal screw-threads of said half rings 23'—23' engage with the external screw-threads of the cup-shaped member 7. The external screw-threads engage with corresponding internal screw-threads of the cap 10. The half rings 23'—23' when assembled on the cup-shaped member 7 provide the portion 28' occupying a position normal to the axis of the steering post 1 and also provide a portion underlying the cup-shaped member 7. Assembly of the parts illustrated in Figure 5 may be readily accomplished in a manner which will be obvious without detailed explanation, said parts being held securely together when the cap 10 is screwed down upon the half rings 23'—23'. When the car is in locked condition, turning of the cap 10 will be prevented in the manner which will be clear from the description of Figures 1 to 4.

Referring to Figures 7 and 8, the cup-shaped member 7 is provided with a pair of half rings 23''—23'' having internal screw-threads to engage with the external screw-threads of the cup-shaped member 7 and having external screw-threads to engage with the internal screw-threads of the cap 10. One of said members 23''—23'' may be provided with tongues 34—34 which fit within corresponding grooves in the other of said half rings. Said half rings are connected together by means of tapered pins 35—35 extending through the tongue and grooved portions of said half rings. The larger ends of said pins 35—35 should be uppermost and should underlie the cap 10, whereby said pins may be removed only after said cap 10 has been removed. The possibility of removing the cap 10 may be governed by structure similar to that illustrated in the preceding figures.

Referring now to Figures 9 and 10, structure is provided for protecting the entire steering column, from the steering wheel to the dash board of the motor car. Numeral 36 indicates the bracket which is ordinarily provided on the dash board of a motor car of the Ford type, which bracket is secured to the steering column 2. According to the present invention, armoring means is provided, which armoring means is made up of two half sleeves 37—37. The upper portions of said half sleeves may take the form of the half rings 23—23 illustrated in Figure 1, or those indicated by the numerals 23'—23' in Figure 5, or those indicated by the numerals 23''—23'' in Figures 7 and 8. Said half sleeves 37—37, which should be of hardened steel or other tool resisting material, co-operate with the hardened steel cap 10 to provide a continuous armoring means from the steering wheel practically to the dash board whereby to baffle a thief in any attempt to tamper with the steering column or any of its associated parts. One of said half sleeves 37—37 may be provided with lugs 38—38. The complementary half sleeve may be provided with hooks 39—39 fitting over the lugs 38—38. The upper ends of the half sleeves 37—37 may be held together by any of the structures illustrated in the first eight figures of the drawing or by any other preferred means. Slots 40—40 will be provided to receive the control levers 41 and 42 of the motor car. The half sleeves may be readily assembled on the steering column 2' when the car is unlocked and the cap 10 removed from the cup-shaped portion 7. Said half sleeves need only be hooked together at their lower ends, and will be securely held against disassembly when the cap 10 is turned down to its normal position. Disassembling may

be accomplished only when the car is unlocked and after the cap 10 has been unscrewed from its mounting. At this time, however, disassembling may be readily accomplished.

The described embodiments of the present invention have been chosen merely for the purpose of illustration and should not be interpreted in a limiting sense. Many modifications of the present invention will occur to those skilled in the art. It is intended in this patent to cover all such modifications that fall within the scope of the invention as defined by the appended claims.

I claim:—

1. In combination, a steering wheel, a steering post, a steering column encasing said steering post and having a cup-shaped member at its upper portion, planetary gearing within said cup-shaped portion and adapted to transmit steering motion from said steering wheel to said steering post, a cap for said cup-shaped portion, coupling mechanism for controlling the connection between said steering wheel and said planetary gearing, locking means for said coupling mechanism, means responsive to the coupling mechanism for preventing the removal of said cap, armoring means mounted in said cap and underlying said cup-shaped member, and means responsive to said coupling means for governing the removability of said armoring means.

2. In combination, a steering wheel, a steering post, a steering column encasing said steering post, said steering column having a cup-shaped portion at its upper end, a cap for said cup-shaped portion, said cup-shaped portion containing planetary gearing for transmitting steering motion from said steering wheel to said steering post, coupling mechanism between said steering wheel and said planetary gearing, locking mechanism for controlling said coupling mechanism, said cap having a member mounted therein for underlying said cup-shaped portion, and means responsive to said coupling member for controlling the removal of said underlying member.

3. In combination, a steering wheel, a steering post, a steering column encasing said steering post, said steering column having a cup-shaped portion at its upper end, a cap for said cup-shaped portion, said cup-shaped portion containing planetary gearing for transmitting steering motion from said steering wheel to said steering post, coupling mechanism between said coupling post and said planetary gearing, locking mechanism for controlling said coupling mechanism, said cap having a member mounted therein for underlying said cup-shaped portion, and means responsive to said coupling member for controlling the removal of said underlying member, said cap and underlying member being composed of tool resisting material.

4. In combination, a steering wheel, a steering post, a steering column enclosing said post, said steering column being provided with a cap, locking mechanism operatively associated with said cap for controlling the operativeness of the connection between said steering wheel and said steering post, armoring means for said steering column, and means responsive to said locking mechanism for controlling the removability of said armoring means.

5. In combination, a steering wheel, a steering post, a steering column enclosing said post, a housing enclosing locking means for controlling the operativeness of the connection between said steering wheel and said steering post, a bracket for supporting said steering column in a motor car, and split sleeve means extending between said housing and said bracket for armoring said steering column, the removability of said armoring means being responsive to said locking means.

6. In combination, a steering wheel, a steering post, transmitting mechanism therebetween, lock controlled means for controlling the operativeness of said transmitting mechanism, a housing enclosing part of said transmitting mechanism, armoring means mounted upon said housing for protecting said transmitting mechanism, said lock controlled means and all sides of said housing, the disassembly of said armoring means being responsive to said lock controlled means.

7. Steering mechanism, including locking mechanism therefor, comprising a steering column having a cup-shaped member, steering elements within said cup-shaped member, a cap for said cup-shaped member, said cap including a hardened steel portion enveloping the side wall of said cup-shaped member and a hardened steel structure underlying said cup-shaped member to protect the bottom of same, the removal of said cap being responsive to said locking mechanism.

8. Steering mechanism comprising a steering column having a cup-shaped member, a cap for said cup-shaped member, said cap and cup-shaped members being provided with means for rendering said steering mechanism inoperative, said cap including a hardened steel portion completely enveloping the side wall of said cup-shaped member, and armoring structure underlying said cup-shaped member to protect same, the removal of said cap and said underlying structure being responsive to said means for rendering the steering mechanism inoperative.

9. Steering mechanism comprising a steering post, a steering wheel, and mechanism for governing the connection between said post and wheel, a steering column encompassing said steering post, and a cap secured to said

steering column and encompassing said mechanism, said cap having a hardened steel portion for resisting attack on said steering column from the side, said cap having armoring structure underlying said cup for protecting the bottom of same.

10. Steering mechanism comprising a steering post, a steering wheel, and mechanism for governing the connection between said post and wheel, a steering column encompassing said steering post, and a cap secured to said steering column and encompassing said mechanism, said cap having a hardened steel portion for resisting attack on said steering column from the side, said cap having armoring structure underlying said cup for protecting the bottom of same, the removal of said cap and underlying armoring means being responsive to said connection governing mechanism.

11. The combination with a steering column having a supporting bracket and a lock housing each surrounding the same but in spaced relation to each other, of protecting means extending from one to the other exteriorly of the column, said means having a connection with the lock housing, substantially as described.

12. The combination with a steering column, a lock housing surrounding the same, and a bracket also surrounding the column, of means connected with the lock housing extending to the bracket along one side of the column, and other means interlocked therewith completing an enclosure for the column between the lock housing and the bracket, substantially as described.

13. The combination with a column, a lock housing surrounding the same, and a bracket also surrounding the column, of a two-part sleeve extending from the bracket to the lock housing and connected non-rotatably with the one, the two sleeve parts having inter-engaging means for preventing their separation, substantially as described.

14. In combination with a steering column, a sleeve surrounding the same, a lock housing surrounding the sleeve and locking the same upon the column, the sleeve extending along the column away from the lock housing, and a bracket surrounding the column adjacent the end of the sleeve remote from the lock housing, substantially as described.

15. In combination with a steering column, a bracket surrounding the same, a two-part sleeve surrounding the column and extended away from the bracket in one direction, means connecting the two sleeve parts for preventing their separation except when the one is moved endwise relative to the other, and a lock housing surrounding the sleeve and connected removably with the column and adapted to prevent relative endwise movement between the two sleeve parts, substantially as described.

16. In combination with a steering column, a bracket, and independent thereof, a lock housing each surrounding the column at separated points, and protecting means for the column extending from the bracket to the housing and removably secured in place thereby, substantially as described.

Signed at Chicago, Illinois, this 2nd day of February, 1922.

HARRY F. GEORGE.