March 22, 1949. H. W. McCREADY 2,465,250

THERAPEUTIC DEVICE

Filed Jan. 26, 1945 2 Sheets-Sheet 1

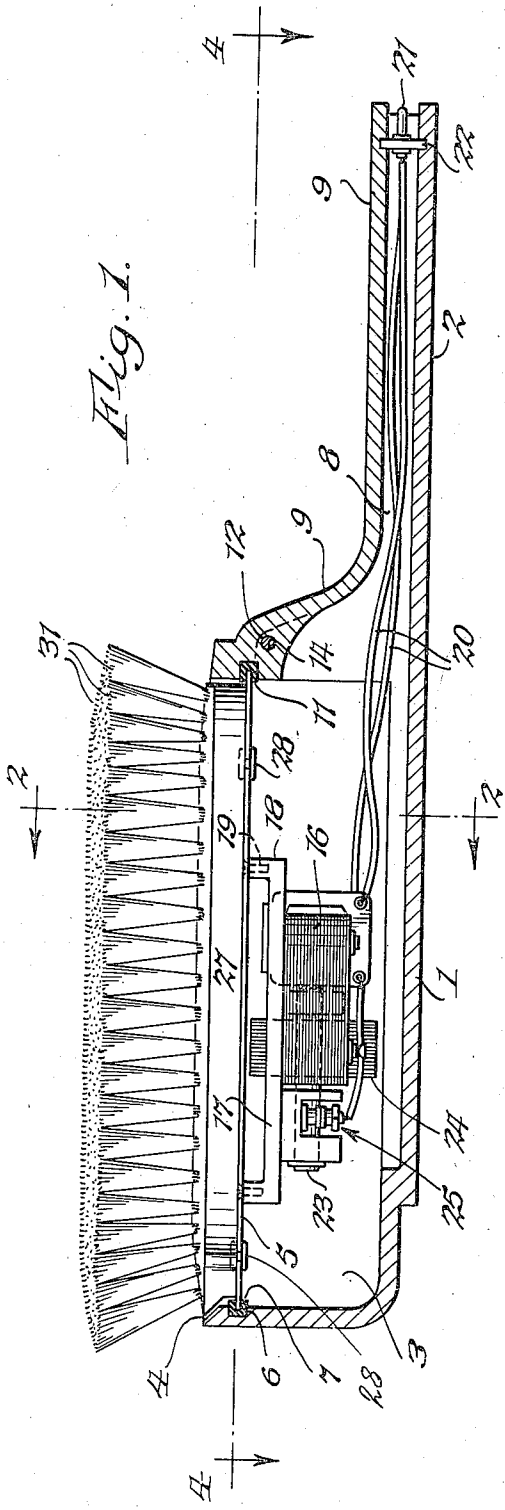

Fig. 1.

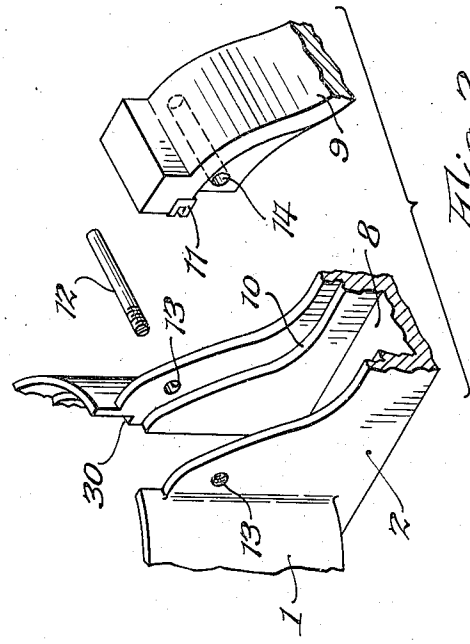

Fig. 3.

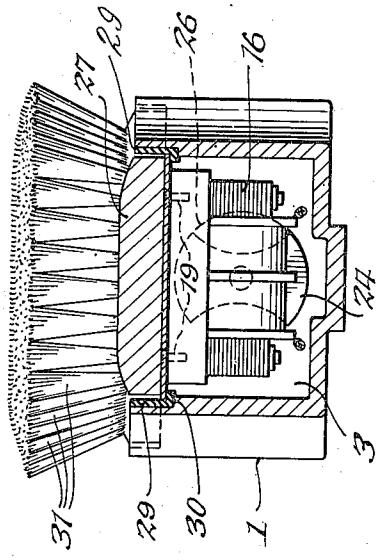

Fig. 2.

INVENTOR.
Howard W. McCready
BY
Parker, Prochnow & Farmer
Attorneys

March 22, 1949. H. W. McCREADY 2,465,250

THERAPEUTIC DEVICE

Filed Jan. 26, 1945

2 Sheets-Sheet 2

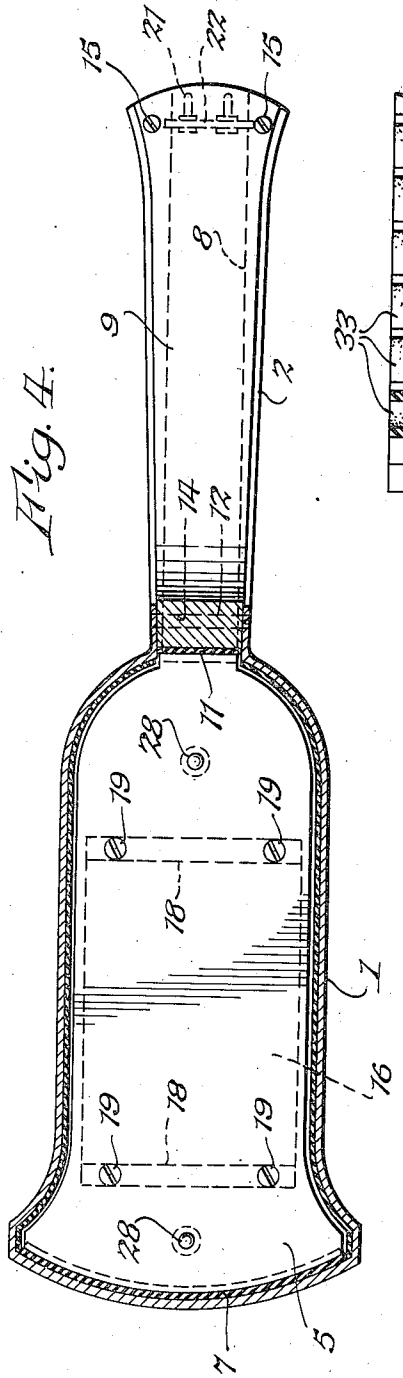

Fig. 4.

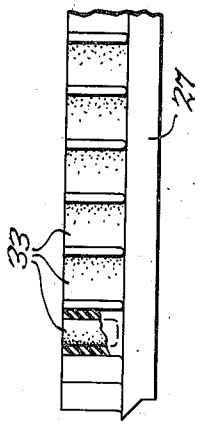

Fig. 6.

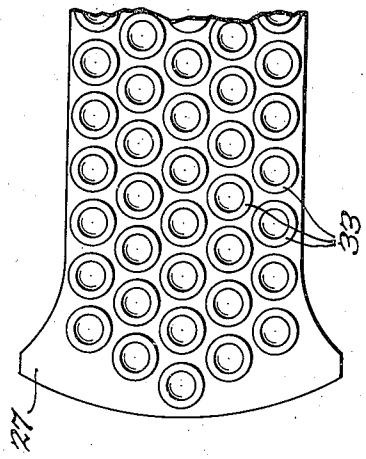

Fig. 7.

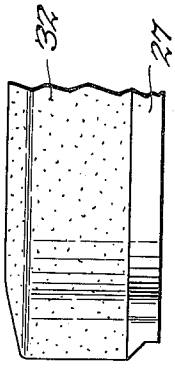

Fig. 5.

INVENTOR.
Howard W. McCready
BY
Parker Prochnow & Parker
Attorneys

Patented Mar. 22, 1949

2,465,250

UNITED STATES PATENT OFFICE

2,465,250

THERAPEUTIC DEVICE

Howard W. McCready, New York, N. Y., assignor to Edwin H. Tompkins, New York, N. Y.

Application January 26, 1945, Serial No. 574,767

8 Claims. (Cl. 128—46)

1

This invention relates to therapeutic devices of the type in which gyratory impulses are imparted to local zones of the human body.

An object of the invention is to provide an improved device of this type, with which the gyratory impulses imparted to the body will be restricted to a minimum extent by the housing for the device, with which the device may be manipulated and held in the hand without materially restricting the gyratory impulses transmitted to the body, and which will be relatively small, effective, practical, efficient, compact and inexpensive.

Another object of the invention is to provide an improved device for imparting gyratory impulses to local zones of the body, which may be held in the hand and manipulated, with which the means for creating the gyratory impulses will have a maximum freedom of movement relatively to the housing in which it is incorporated, and by which it is manipulated, with which the part engaging the body may be removed for cleaning and sterilization, and which will have a minimum of assembly operations.

Another object of the invention is to provide an improved device for imparting gyratory impulses to a local zone of the body, with which the impulses may be transmitted to the body through bristles as a brush, or through massage elements or a cushioning pad, as may be desired.

Other objects and advantages will be apparent from the following description of one embodiment of the invention, and the novel features will be particularly pointed out hereinafter in connection with the appended claims.

In the accompanying drawing:

Fig. 1 is a longitudinal, sectional elevation of a device constructed in accordance with this invention, in the nature of a hairbrush;

Fig. 2 is a transverse, sectional elevation of the same, the section being taken approximately along the line 2—2 of Fig. 1;

Fig. 3 is a perspective of portions of certain parts of the device separated from each other and illustrating details of assembly and of the manner of securing the motor plate in position at one end;

Fig. 4 is a plan of the same, with the bristle plate removed;

Fig. 5 is a side elevation of part of a member to replace the bristle carrying plate or member;

Fig. 6 is a similar side elevation of part of another member to replace the bristle carrying plate or member; and

Fig. 7 is a plan of the part of the member shown in Fig. 6.

2

In the illustrated embodiment of the invention and referring particularly to Figs. 1 to 4, the improved device includes a hollow housing 1 having, if desired, a handle 2 extending from one end thereof. The housing has a chamber 3 with an open face 4. A rigid plate 5 is disposed across the chamber 3 adjacent the open face 4 of the housing, so as to close the housing at such open face. The end wall of the housing, opposite from the handle 2, on its inside face is provided with a groove 6 in which is disposed a U-shaped cushion or channel strip 7, with the groove or channel facing into the chamber and receiving one end edge of the plate 5. The handle 2, on its face toward the open face 4, has a channel 8, see Fig. 3, which extends the full length of the handle and into the chamber 3, and this channel 8 is closed by a handle strip or bar 9, see Figs. 1 and 4, which fits flush in the channel 8 against a shoulder 10. The handle bar 9, has one end forming part of an end wall of the chamber 3, which carries a U-shaped cushion or channel strip 11, with the groove or channel facing inwardly and at the level of the plate 5. The adjacent end edge of the plate 5 is received in the groove or channel of the cushion 11.

The cushions 7 and 11 are of soft, resilient, easily compressed material such as very soft gum rubber or sponge rubber, and provide the sole and a floating support for opposite end edges of the plate 5. The plate 5, around its entire marginal edge, is spaced from the wall of the chamber 3 so that it floats entirely in the cushions 7 and 11. The handle bar 9 is held in place, at one end, by a locking pin 12, shown in Fig. 3 as removed from the handle, which passes through aligned openings 13 in the handle 2 at opposite sides of the channel 8, but close to the body 1, and also through a passage 14 in the adjacent end of the handle bar 9. One or more fasteners 15 pass through the handle 2 into the bar 9 adjacent the free end of the handle. The fasteners 15 may be screws which are threaded into the bar 9.

A small, electric motor 16 has its base 17 secured by lugs 18 and screws 19 to the inner face of plate 5 so that the motor will lie in the chamber 3, closed by the plate 5. Circuit wires 20 for the electric motor extend from the motor through the channel 8 to the free end of the handle where they are connected to terminals 21 carried by a cross bar 22 of insulating material secured in the channel 8 a short distance inwardly from the open end of the channel. These contact posts 21 are concealed entirely

within the handle, but may be reached at the free end of the handle to apply thereover a connector plug by which a connection from an operating circuit may be made to the motor 16.

The motor 16 may be of any suitable type with a shaft 23 mounted for rotation, in the frame of the motor, about an axis which is approximately parallel to the plane of the plate 5 and extending in a direction lengthwise of the plate 5, that is, in the dimension of the plate 5 between the ends secured in the cushions 7 and 11. The shaft 23 is provided with an axial unbalance of substantial extent well in excess of any accidental and unintentional unbalance due to inaccuracy of manufacture, so that when the motor operates and shaft 23 rotates about its axis, the unbalance will cause the entire motor 16 to gyrate in a small, closed loop path parallel to and adjacent the axis of the shaft 23. Since the motor is mounted directly on the plate 5, such gyrations will be transmitted to the plate 5. The motor 16 is spaced entirely from the walls of the chamber 3, so that it is floatingly mounted for movement with the plate 5, and thus the motor and plate gyrate together within the housing.

The motor is illustrated as of the small, make and break, magnetic type in which an armature 24 is fixed on the shaft 23 for rotation therewith, with its ends moving past the poles of a U-shaped electromagnet, the winding of which is connected in series with a make and break device 25 operated by a cam on the shaft 23, to open the circuit through the electromagnet as the ends of armature 24 closely approach a position across the poles of the electromagnet. Inertia carries the armature past the dead center position with respect to the poles, and after the armature passes such a position, the cam on the shaft 23 re-establishes a circuit through the electromagnet which causes another attraction between the armature and the poles of the electromagnet to give the armature a further rotary impulse that keeps it in motion.

This is a well known type of electric motor which has been extensively used in electric razors or shavers, except that the motor used for shavers and other similar purposes does not have any additional or avoidable axial unbalance. This unbalance may be easily obtained by applying an eccentric weight 26 to the rotatable shaft 23 of the motor. In this type of motor this added unbalance is easily obtained by attaching a body to one side of the armature, as shown in Fig. 2, it being understood that the added weight or body is of non-magnetic material, such as lead.

An auxiliary plate or member 27, is disposed face to face against the plate 5 at the open face 4 of the housing. This plate or member 27 is detachably secured to the plate 5 in any suitable manner, such as by snap fasteners 28, one element of which is carried by the plate 5 and the other by the abutting face of the member 27. There are preferably at least two of such fasteners 28, one adjacent each end of the plate 5. The member 27, when secured to the plate 5, is spaced everywhere from the wall of the chamber 3 at the open face 4, so that it contacts only with the plate 5. Because of this, the member 27 will partake of the gyrations of the motor and plate 5 which were explained above. If desired, very soft, resilient cushions 29 may be disposed between the side edges of the plate 5 and the shoulder 30 on the inside wall of the chamber 3. Very soft gum rubber and sponge rubber, are excellent materials of which cushions 29 can be made, and since they extend along the sides of the chamber 3 adjacent the open face 4, they prevent any accidental contact of the member 27 directly with the housing 1 at the open face 4.

The member 27 carries a plurality of groups of bristles 31, such as are commonly used in hairbrushes, which extend generally normal to the plane of the outer face of member 27, or transversely of the axis of rotation of the unbalanced shaft 23. Along the end and side edges, the bristle groups 31 may, if desired, be tilted outwardly slightly or sidewise, in a direction away from the other bristles, as shown in Figs. 1 and 2. The bristles are secured in the member 27 in the usual manner in which bristles for brushes are secured in a base.

In a construction such as above described and illustrated in Figs. 1 to 4, the brush may be used in the manner of an ordinary hairbrush by grasping it at the handle 2 and sweeping the bristles 31 over the skin or scalp in the manner usual in hairbrushes. It may be so used even though the motor 16 is idle. When a therapeutic action is desired, a circuit connector is applied to the free end of the handle over the contact posts 21, which supplies operating current to the motor 16. The motor 16 then rotates the shaft 23, and the axial unbalance of that shaft causes the motor, the plate 5, the member 27 and the bristle groups 31 to gyrate bodily relative to the housing 1, even though the housing is held firmly by the handle 2, or by one grasping the housing 1. Since the motor 16, the plate 5 and the member 27 are all floatingly mounted relatively to the housing, their gyrations will not be hampered or restricted by a firm grasping of the housing 1 or its handle 2.

The gyrations of the member 27 and bristle groups 31 will be about axes parallel to the axis of the shaft 23, and when the bristle groups 31 are applied to the scalp or to the skin of the body in the manner in which brushes are ordinarily applied to the skin, the bristles will impart to the scalp or skin, corresponding gyratory impulses which serve to stimulate blood circulation in the scalp and also stimulate the skin nerves, or nerve terminals in the skin, on the local surface of the body over which the bristles are moved or against which they are pressed. It might ordinarily be expected that such lateral gyrations of the motor and bristles would do no more than flex the bristles 31, but it has been found that a rather unusual action on the skin or scalp is caused by the bristles 31, which is very different from the mere sidewise swishing or brushing of the bristles over the scalp that occurs when an ordinary brush is moved over the scalp in an ordinary brushing action.

Gyratory impulses transmitted to the body through the bristle groups 31 not only stimulate the local blood circulation through the skin and skin layers, but also cause a relaxation of the nerve terminals in the skin or adjacent parts of the body. The sensation is very pleasing to the patient, and it is decidedly different from the effects caused by ordinary vibration of oscillation back and forth in the same path that has been a common feature of so many vibratory brushes and therapeutic devices heretofore. The body action and the physical sensation created by this device are distinctly different from those created by the ordinary action of a brush, and by vibratory or oscillatory movements of a brush.

In the embodiment of the invention shown in Fig. 5, the member 27 which replaces the member

27 carrying the bristle groups 31 as in Figs. 1 to 4, carries a pad 32 which is preferably of sponge rubber or other soft, resilient material, that may be used, if desired, when the device is applied to a part of the anatomy where no brushing action of the hair is required. The pad 32, however, will stimulate local blood circulation in an area against which it is held, when the motor is operated, as well as relax the nerves in the adjacent portion of the body.

In Figs. 6 and 7 the member 27, instead of having the bristle groups 31 or the pad 32, carries a plurality of flexible, resilient pins 33 which extend from the outer face of the member 27 in a direction approximately normal to that face of the member. These pins 33 are quite freely flexible sidewise, and while they may be solid, flexible rubber pins of any suitable diameter, they are preferably tubular and may have somewhat the appearance and characteristics of small pieces of rubber tubing of approximately the same length disposed endwise against a face of the member 27. When these pins 33 are applied against a local surface of one's anatomy, they will have a stimulating effect on that part of the anatomy very much the same as the bristle groups 31 have, but since the pins 33 are somewhat stiffer than the bristles, they transmit somewhat stronger gyratory impulses to the body surface against which they are pressed. These pins 33 may be of the same or different sizes, and arranged in any suitable order or plan on the member 27.

The plate 5 and member 27 constitute a unit that may conveniently be termed a member or element which is floatingly mounted in the housing and which is gyrated by the motor 16 with the axial unbalance, but this unit or member is separable into two parts, one of which, such as plate 5, normally remains in the housing to protect the motor 16 from tampering and from injury due to blows thereagainst or to liquids being spilled thereon, and the other of which, such as member 27, may be detached for cleaning or sterilizing, or for replacement by a member 27 having a pad 32 or flexible pins 33. In the manufacture of the device, the motor may be assembled separately, then attached to the plate 5.

In assembling, the plate 5 is placed across the housing, and the handle bar 9 applied to the handle and attached thereto, which secures the plate 5 in position and closes the chamber 3 of the housing at the open face. One of the parts 27, with the bristles, pad or flexible pins thereon, is then applied by snapping it to the plate 5 by the snap fasteners 28, and the device is then ready for use. These snap fasteners 28 are a very inexpensive and simple means for securing member 27 to the plate 5, but any other form or type of detachable connection between the member 27 and the plate 5 is, of course, contemplated as a part of the invention in its broadest scope. The cushions 7 and 11, and the side cushions 29 are preferably of sponge rubber or a very soft, resilient gum rubber, but they may, of course, be replaced with any other suitable and available soft cushioning means.

It will be understood that various other changes in the details, materials and arrangements of parts, which have been herein described and illustrated in order to explain the nature of the invention, may be made by those skilled in the art within the principle and scope of the invention, as expressed in the appended claims.

I claim:

1. A therapeutic device comprising a hollow housing having an open face, and a handle extending therefrom in a direction parallel to said open face, said handle having a channel on the same side as the open face of the housing, and extending endwise into the chamber of said housing, a bar detachably coupled to said handle, closing said channel, and having an end portion forming a closure for the opening of the channel into said chamber, a soft, resilient cushion carried by said end portion of said bar, another soft, resilient cushion carried by said housing at the opposite side of the chamber, an element supported by said cushions in fully spaced relation to the walls of said housing and bar, an electric motor secured to the inner face of said element and spaced fully from the walls of said chamber, said motor having a shaft driven thereby, with a substantial axial unbalance well in excess of any accidental and unintentional unbalance due to inaccuracy of manufacture, the axis of said shaft being parallel to said open face, and a part extending outwardly from said element beyond said open face for contact with a local zone of the anatomy.

2. A therapeutic device comprising a hollow housing having an open face, and a handle extending therefrom in a direction parallel to said open face, said handle having a channel on the same side as the open face of the housing, and extending endwise into the chamber of said housing, a bar detachably coupled to said handle, closing said channel, and having an end portion forming a closure for the opening of the channel into said chamber, a soft, resilient cushion carried by said end portion of said bar, another soft, resilient cushion carried by said housing at the opposite side of the chamber, an element supported by said cushions in fully spaced relation to the walls of said housing and bar, an electric motor secured to the inner face of said element and spaced fully from the walls of said chamber, said motor having a shaft driven thereby, with a substantial axial unbalance well in excess of any accidental and unintentional unbalance due to inaccuracy of manufacture, the axis of said shaft being parallel to said open face, a part extending outwardly from said element beyond said open face for contact with a local zone of the anatomy, circuit wires for said motor extending along the channel from said chamber, a member provided across said channel adjacent the free end of the handle, and circuit connectors carried by said last named member so as to extend in a direction outwardly and endwise of the handle, and connected to said circuit wires, said member being confiined in said channel by said bar.

3. A therapeutic device comprising a hollow housing having an open face, and a handle extending therefrom in a direction parallel to said open face, said handle having a channel, on the same side as the open face of the housing, and extending endwise into the chamber of said housing, a bar detachably coupled to said handle, closing said channel, and having an end portion forming a closure for the opening of the channel into said chamber, a soft, resilient cushion carried by said end portion of said bar, another soft, resilient cushion carried by said housing at the opposite side of the chamber, an element supported by said cushions in fully spaced relation to the walls of said housing and bar, soft, resilient strips extending along the remaining

periphery of said element between said element and the side walls of the housing, an electric motor secured to the inner face of said element and spaced fully from the walls of said chamber, said motor having a shaft driven thereby, with a substantial axial unbalance well in excess of any accidental and unintentional unbalance due to inaccuracy of manufacture, the axis of said shaft being parallel to said open face, and a part extending outwardly from said element beyond said open face for contact with a local zone of the anatomy.

4. A skin stimulating device comprising a housing which may be manipulated and having a chamber therein, an electric motor disposed in and only partially filling said chamber and having a shaft rotatably driven thereby, the shaft having a substantial axial unbalance well in excess of any accidental and unintentional unbalance due to inaccuracy of manufacture, means resiliently and floatingly mounting said motor within said chamber for movement in all directions crosswise of the axis of rotation of said shaft, and providing the sole and a floating support of said motor in said chamber, a member extending from said motor to the exterior of said housing, spaced from said housing so as to be free to move with said motor, and terminating outwardly in a relatively broad and generally flat surface approximately parallel to the axis of rotation of said shaft, and a plurality of resilient, freely flexible, elongated elements projecting from said broad surface of said member exteriorly of said chamber for contact with a local zone of the skin to which the gyratory movements of the motor will be imparted as gyratory impulses.

5. A skin stimulating device comprising a housing which may be manipulated and held, and having a chamber therein substantially closed but opening outwardly through an open face, an electric motor disposed in and only partially filling said chamber and having a shaft rotatably driven thereby, the shaft having a substantial axial unbalance well in excess of any accidental and unintentional unbalance due to inaccuracy of manufacture, a relatively rigid member mounting said motor, spaced from the walls of the chamber, and having an outwardly facing, broad, generally flat face, means resiliently and floatingly mounting said member, and through it said motor, for movement in all directions crosswise of the axis of rotation of the shaft, and providing the sole and a floating support for said motor and member from said housing, an element abutting face to face with said generally flat face of said member detachably coupled thereto, and having an outwardly exposed broad face, and a plurality of resilient, freely flexible elongated elements secured at their ends to said outwardly exposed face of said element and projecting side by side therefrom for contact with a local zone of the skin to transmit thereto impulses received from said motor.

6. A skin stimulating device comprising a hollow housing which may be held and manipulated, and having an opening to the exterior, a relatively rigid member within said housing, exposed through said opening, and free of direct contact with the housing, soft, resilient cushioning means resiliently and floatingly mounting said member from said housing for movement in all directions relatively to said housing and forming the sole and a floating support of said member, motor operated means carried by said member within

the housing and spaced fully from the walls of said housing for imparting to said member rapid local periodic movements of small amplitude, and a plurality of freely flexible elements projecting from said member, exteriorly of said housing, in side by side relation for contact at their ends with the skin and transmitting thereto impulses received from said motor means.

7. A skin stimulating device comprising a hollow housing which may be held and manipulated, and having an opening to the exterior, a relatively rigid member within said housing, exposed through said opening, and free of direct contact with the housing, soft, resilient cushioning means resiliently and floatingly mounting said member from said housing but confining it therein for movement in all directions relatively to said housing and forming the sole and a floating support of said member, motor operated means carried by said member within the housing and spaced fully from the walls of said housing for imparting to said member rapid local periodic movements of small amplitude, and a plurality of freely flexible elements projecting from said member, exteriorly of said housing, in side by side relation for contact at their ends with the skin and transmitting thereto impulses received from said motor means, said motor operated means being operable to impart to said rigid member increments of movement in directions approximately parallel to the longitudinal axes of said flexible elements, whereby impulses will be transmitted lengthwise of said elements to the skin.

8. A skin stimulating device comprising a housing, having a chamber, an open face leading to the chamber, and grooves in and extending along opposed walls of the chamber and parallel to said open face but spaced inwardly therefrom, a strip of soft, elastic material in each groove and projecting into said chamber from the opposed chamber walls, and towards the opposite wall of the chamber, each strip having a channel opening into said chamber and extending parallel to said open face, a relatively rigid member having its edges received in said channels, supported entirely therefrom, extending across said chamber, and spaced around its entire periphery from said housing, electrically operated means attached to the inner face of said member within said chamber and spaced entirely away from the chamber walls, for imparting to said member, repeated, rapid, periodic, local movements of small extent, an element detachably secured to the outer face of said member, and a plurality of freely, flexible long, slender members extending from the outer face of said element, in side by side relation for contact at their outer ends with the skin for transmitting thereto impulses received from said electrically operated means.

HOWARD W. McCREADY.

REFERENCES CITED

The following references are of record in the file of this patent:

UNITED STATES PATENTS

Number	Name	Date
838,096	Fenstermacher	Dec. 11, 1906
955,339	Lumsden	Apr. 19, 1910
2,018,046	Wilson	Oct. 22, 1935
2,174,452	Torrison	Sept. 26, 1939
2,287,501	Thomas	June 23, 1942
2,307,554	Wettlaufer	Jan. 15, 1943
2,345,438	Tompkins	Mar. 28, 1944