(19) Europäisches Patentamt
European Patent Office
Office européen des brevets

(11) EP 2 623 227 A1

(12) EUROPEAN PATENT APPLICATION

(43) Date of publication:
07.08.2013 Bulletin 2013/32

(51) Int Cl.:
B21D 43/00 (2006.01)
B21F 23/00 (2006.01)
B21D 43/28 (2006.01)
B21D 11/12 (2006.01)
B65G 47/14 (2006.01)

(21) Application number: 13153175.8

(22) Date of filing: 30.01.2013

(84) Designated Contracting States:
AL AT BE BG CH CY CZ DE DK EE ES FI FR GB GR HR HU IE IS IT LI LT LU LV MC MK MT NL NO PL PT RO RS SE SI SK SM TR
Designated Extension States:
BA ME

(30) Priority: 01.02.2012 IT TO20120083

(71) Applicant: OSCAM S.p.A.
10127 Torino (IT)

(72) Inventor: Peruzzo, Stefano
I-10127 Torino (IT)

(74) Representative: Frontoni, Stefano
Buzzi, Notaro & Antonielli d'Oulx
Via Maria Vittoria, 18
10123 Torino (IT)

(54) Plant for bending metal bars

(57) A plant for bending metal bars, in particular bars for reinforcing concrete, comprising:
- at least one bending unit (2, 4) defining a bending plane and a space for receiving a number of bars (A, B, C) to be bent, arranged parallel to one another and on top of one another in a plane orthogonal to the bending plane; and
- means for aligning the bars with one another, comprising a thrust member (8) mobile in the longitudinal direction of the bars received in said receiving space and designed to act on first ends of said bars. The aforesaid means comprise a stop element (12) provided for acting on second ends of said bars opposite to said first ends, so as to cause the bars to slide on one another as a result of the action of said thrust member, until said bars find themselves substantially aligned with one another.

FIG. 3

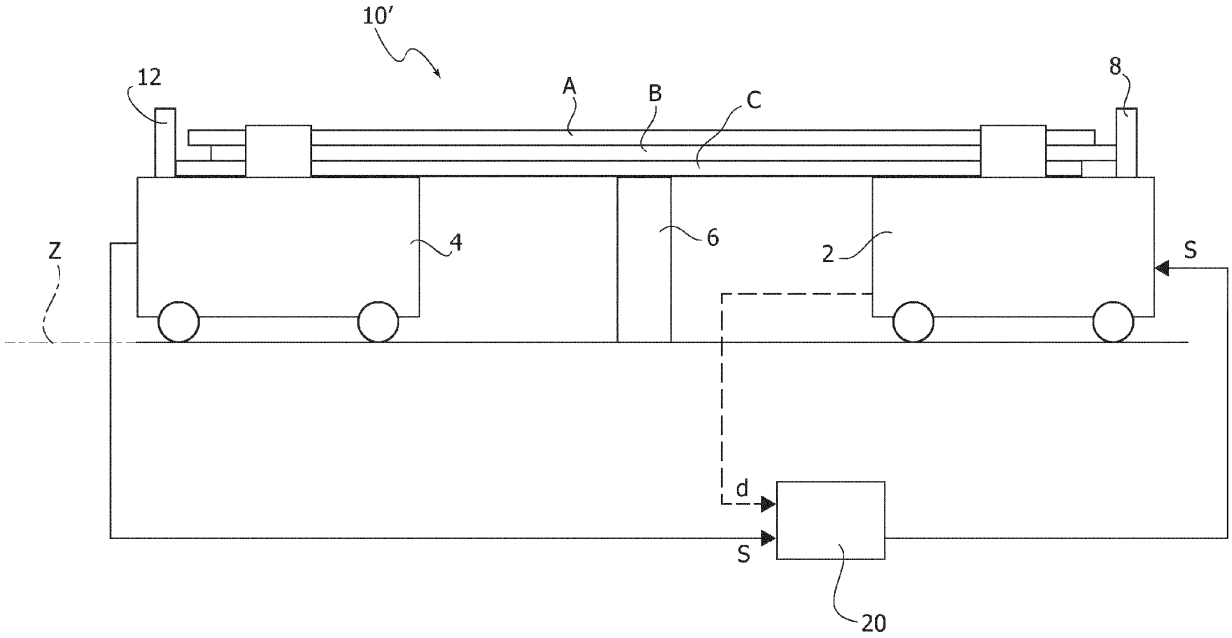

EP 2 623 227 A1

Description

TEXT OF THE DESCRIPTION

[0001] The present invention relates to a plant for bending metal bars, in particular bars for reinforcing concrete, comprising:

- at least one bending unit defining a bending plane and a space for receiving a number of bars to be bent, arranged parallel to one another and on top of one another in a plane orthogonal to the bending plane; and
- means for aligning said bars with one another, comprising a thrust member mobile in the longitudinal direction of the bars received in said receiving space and designed to act on a first ends of said bars.

[0002] A plant of the type referred to above is, for example, described in the Italian patent No. IT 1360184, filed in the name of the present applicant. In its introductory part, the aforesaid document refers to plants of the known art in which the thrust member is constituted by a flat stop plate that is oriented perpendicular to the plane of the bending units and can be moved via appropriate means in the longitudinal direction of the bars so as to cause the bars to slide on one another in said direction in order to set them up and align them with one another. For the same purpose, instead of the stop plate referred to above, the Italian patent No. IT 1360184 teaches using as thrust member the eccentric pin of one of the two bending units; this enables simplification of the overall structure of the plant and the possibility of operating also on "short" bars on which the plants that use the stop plate have instead some difficulty in operating, since this must be located at a certain distance from the bending mandrel so as not to constitute a hindrance to the bending means of the bending units.

[0003] In all the solutions described in the patent No. IT 1360184 - i.e., the solution provided with stop plate as likewise the alternative solution in which the eccentric pin of the bending unit takes the place of the stop plate, there is the drawback that, when the bars are of large diameter, for example, 30 mm, the thrust member - whether it is the stop plate or else the eccentric pin - does not manage to bring them into a mutually aligned condition. This drawback is due to the forces of friction that are generated between the bars, which prevent the bars from sliding on one another, so that the action of thrust by the stop plate or the eccentric pin, instead of causing a relative displacement between the bars into a mutually aligned condition thereof, determines, instead, displacement of the entire set of bars, which continue then to remain misaligned. The forces of friction in question are mostly caused by the surface ribbings of the bars and, as may be readily understood for the person skilled in the sector, their value increases as the diameter of the bars and their length increase.

[0004] The object of the present invention is to overcome the aforesaid drawback. This object is achieved via a bending plant having the characteristics specified in Claim 1.

[0005] The claims form an integral part of the technical teaching provided herein in relation to the invention.

[0006] Further characteristics and advantages of the invention will emerge clearly from the ensuing description with reference to the annexed drawings, which are provided purely by way of non-limiting example and in which:

- Figures 1 and 2 are schematic illustrations of a bending plant according to the known art, in two successive steps of operation of the plant; and
- Figures 3 and 4 illustrate an embodiment of the plant described herein, in two successive steps of operation of the plant.

[0007] In the ensuing description, the various specific details are illustrated, aimed at providing an in-depth understanding of the embodiments. The embodiments may be obtained without one or more specific details, or with other methods, components, materials, etc. In other cases, known structures, materials or operations have not been described in detail so that various aspects of the embodiments will not be obscured.

[0008] The references used are merely provided for convenience and hence do not define the sphere of protection of the embodiments.

[0009] Figures 1 and 2 illustrate in an altogether schematic way a bending plant 10 of the type already known in the art. Said plant comprises two bending units 2 and 4 that define a bending plane and a space for receiving a number of bars A, B, C to be bent, arranged parallel to one another and on top of one another in a plane orthogonal to the bending plane. One or both of the bending units are mobile in the longitudinal direction Z of the bars received in the aforesaid receiving space in order to be able to execute bending in any desired point of the bars. The plant moreover envisages a vicing apparatus 6 that keeps the metal bars still during bending and during translation of one or both of the bending units in the longitudinal direction of the bars.

[0010] The known plant of Figures 1 and 2 moreover envisages a stop plate 8, which is provided with a contrast surface orthogonal to the bending plane and is set in front of the ends of the bars on one side in the receiving space. The stop plate 8 is designed to be moved in the direction of the bars (according to the movement S indicated in the figures) and against them to push the bars against which it goes gradually so as to bring them into a condition where they are mutually aligned with the other bars that are in the receiving space. In the example illustrated, the stop plate is carried by the bending unit 2 and the action of thrust by said stop plate is obtained as a result of the movement of the unit 2 in the longitudinal direction Z. As has been mentioned previously, as an alternative to the stop plate, the plant of the Italian patent No. IT1360184

uses, instead, the eccentric pin of the bending unit itself for exerting the action of thrust referred to above.

[0011] Figure 1 illustrates the bars A, B, C in a mutually misaligned condition after they have been unloaded onto the bending units via, for example, an apparatus for automatic loading of the bars. To carry out alignment, the stop plate 8 is moved in the direction of the bars towards the left (as viewed in the figures). As has been mentioned above, in theory, this action should enable the bars B, C, which are displaced towards the stop plate, to be brought into the condition where they are aligned with the bar A, which is the furthest from the stop plate. However, in the case illustrated (which regards operations on bars of "large" diameter) the thrust of the stop plate determines, on account of the friction between the bars, only a movement of all the bars together, i.e., without any change in their relative positions, so that they remain misaligned with respect to one another (see Figure 2).

[0012] In order to overcome the above drawback, the plant according to the present invention comprises a stop element that, acting on the ends of the bars opposite to the ones pushed by the stop plate, prevents the movement of all the bars together and enables the stop plate to overcome the forces of friction between the bars so as to make them slide on one another, thus obtaining their mutual alignment.

[0013] Figures 3 and 4 illustrate an example of embodiment of the plant according to the present invention. Designated by the reference number 10' is the plant as a whole, which has the same means as the ones so far described with reference to the known plant of Figures 1 and 2 (it is to be noted that the means in common between the two plants are designated in the figures by the same reference numbers). Figure 3 illustrates a set of bars A, B, C of "large" diameter, all substantially of the same length, arranged on the two bending units 2 and 4 in a mutually misaligned condition.

[0014] As schematically represented in the figures, the plant 10' envisages a stop element 12 provided with a contrast surface orthogonal to the bending plane, which sets itself in front of the ends of the bars that are opposite to the ends at which the stop plate 8 is located. In various embodiments, it is possible to envisage that both the stop plate and the stop element can be displaced from their respective operative positions referred to above, where they extend above the bending plane, to respective inoperative positions in which they come to be underneath the bending plane so as not to interfere with the operations of bending of the bars.

[0015] As has already been illustrated previously, the stop plate 8 has the function of moving towards the bars and of pushing the ends of the bars that it encounters in its movement S. The stop element 12 is instead designed to determine a force of reaction to the thrust exerted by the stop plate, which is transmitted to the bars, so as to cause the bars to slide on one another and thus obtain their mutual alignment. In preferred embodiments, the stop element defines a contrast surface that blocks in position the bars that come into contact therewith, whilst in the meantime the stop plate acts so as to bring also the other bars against said surface.

[0016] With specific reference to Figures 3 and 4, in operation the stop plate 8 pushes the bars A and B towards the left, whereas the stop element keeps the bar C still. Then the bar A also comes into contact with the element 12, pushed by the stop plate through the bar B, so that at that point it is only the bar B that is pushed by the stop plate. Finally, whilst the two bars A and C are kept still by the element 12, also the bar B is brought by the stop plate into contact with the stop element 12, and all the bars A, B, C are thus aligned with one another.

[0017] As schematically represented in the figures, the action of thrust by the stop plate is obtained as a result of the movement S of the bending unit that carries the stop plate. It is, however, clear that as an alternative it is possible to envisage a stop plate mobile via purposely designed drive means.

[0018] Moreover, as taught by the Italian patent No. IT 1360184 discussed above, instead of the stop plate it is possible to use the eccentric pin of the bending unit itself. In the same way, the stop element may be an additional element of the bending unit, similar to the stop plate, or else the eccentric pin of the bending unit, or even any other element of said unit suited to the purposes referred to.

[0019] Once the condition illustrated in Figure 4 is reached, the stop plate is stopped by purposely designed control means 20 designed to govern the movement S of the stop plate 8. For this purpose, the control means can be configured for detecting the distance d between the stop plate and the stop element and stop the advance of the stop plate when the aforesaid distance assumes a value equal to the length L of the bars. In the light of Figure 4, it is clear in fact that in this case - i.e., when the distance between the stop plate and the stop element is equal to the length of the bars being treated - the bars are necessarily in their mutually aligned condition.

[0020] Said control modality is not, however, the preferred one in so far as it leads any possible bars of effective length greater than the nominal one to be banged against and deformed by the stop plate, since this, as has been mentioned, always moves up to a distance, with respect to the stop element, equal to the nominal length of the bars. In this connection, it is also to be noted that it is not rare for the rebars to be obtained with high tolerances, up to the point where they are a few centimetres longer than the nominal length, so that in these cases there is also the risk, not only of damaging the bars, but also of causing damage to the plant and/or of exposing the operator to situations of danger.

[0021] For this reason, in a preferred embodiment of the plant described herein, there is envisaged a different control modality, as described hereinafter.

[0022] In said preferred embodiment, the stop element can be displaced in the same direction and in the same sense as the movement of the stop plate 8 when it is

subjected to a force of thrust in said direction and sense that exceeds a predetermined limit value; in general, the aforesaid value must be greater than the force of friction between the bars - i.e., than the force, to be impressed on the bars by the stop plate, that is necessary to displace said bars with respect to one another as far as a mutually aligned condition - and at the same time cannot exceed - or in any case not beyond a certain range - the bending strength of the individual bars.

[0023] Said characteristic determines an operation where, in the condition illustrated in Figure 3, i.e., when the bars are not yet aligned and hence exert on the stop element a force of thrust that is clearly less than the aforesaid limit value, the element 12 remains stationary and consequently acts as a stop for the bars, whereas, in the condition of Figure 4, i.e., when the condition where the bars are aligned is reached and these are squeezed between the stop plate and the stop element, the bars push against the stop element with a force that exceeds the limit value referred to above, and the stop element then starts to move (according to the movement S' indicated in Figure 4).

[0024] In this embodiment, the control means 20 are configured for interrupting actuation of the stop plate 8 as soon as they detect the movement S' by the stop element (for example, detecting the signal coming from the encoder associated to the bending unit 4); this enables stopping of the stop plate practically immediately after the condition of mutual alignment of the bars has been reached, thus preventing the bars from being displaced from their position of loading on the plant.

[0025] From what has been said above, even when between the bars to be aligned some were to be longer than the nominal value, this would not create any consequence on operation of the plant in that as soon as these were pressed before the others between the stop plate and the stop element, there would immediately be caused displacement of the stop element and hence blocking of the stop plate by the control means. As has been mentioned above, the aforesaid limit value must not in fact exceed - or in any case not by very much - the bending strength of the individual bars, precisely to prevent the longer bar or bars that are present among the set of bars to be bent, once they are compressed between the stop plate and the stop element, from starting to undergo deformation instead of causing the aforesaid element to move.

[0026] With specific reference to the embodiment illustrated in the figures, to obtain the movement indicated above by the stop element, the bending unit that carries said element is left in a configuration such as to be freely mobile; in this case, the value of the force of inertia opposed by the bending unit corresponds to the aforesaid limit value and is precisely such as to be greater than the force of friction between the bars and smaller (or, in any case, only slightly greater) than the bending strength of the individual bars. Consequently, in the condition illustrated in Figure 3, the bending unit 4 remains stationary in such a way that the element 12 will act as a stop, whereas, once the condition in Figure 4 is reached, it starts to move, pushed by the stop plate 8 by means of the bars. Once the movement S' is detected, the control means 20 halt actuation of the stop plate 8. The bending units can thus immediately start the bending operations, setting themselves in predetermined points along the bars, without any need for further displacements by the latter.

[0027] Of course, without prejudice to the principle of the invention, the details of construction and the embodiments may vary, even significantly, with respect to what has been illustrated herein purely by way of non-limiting example, without thereby departing from the scope of the invention, as defined by the annexed claims.

[0028] In this connection, it is to be noted that the safety travel that the stop element performs can be obtained also according to modalities alternative to the one illustrated; for example, the stop element can be connected to a structure of the plant different from the bending unit (or to the bending unit that is blocked in the longitudinal direction of the bars) via interposition of elastic means designed to enable movement of the stop element - in the same direction and in the same sense as the movement of the stop plate 8 - only when the element itself is subjected to a force of thrust greater than the limit value indicated above. Moreover, even though the plant has been described as presenting two bending units, it is clear that these units may be different in number according to the application requirements; for example, there may be one or three of them. In a further alternative embodiment, the plant comprises a fixed stop element and control means configured for interrupting the action of the thrust member according to the electric power consumed by the drive means (or the motor means designed to move the bending unit 2) of said thrust member. In various embodiments, the control means are configured for interrupting the action of the thrust member as soon as the electric power consumed exceeds a pre-set limit value corresponding to generation of a force, by said thrust member, greater than the force necessary for overcoming the friction between one bar and another and displacing said bars up to a mutually aligned condition. In various embodiments, the control means comprise a current sensor pre-arranged for measuring the current that is supplied to the drive means (or to the aforesaid motor means). In various embodiments, the drive means are constituted by an electric actuator of a linear type, such as, for example, a brushless motor.

Claims

1. A plant for bending metal bars, in particular bars for reinforcing concrete, comprising:

   - at least one bending unit (2, 4) defining a bending plane and a space for receiving a number of

bars (A, B, C) to be bent, arranged parallel to one another and on top of one another in a plane orthogonal to the bending plane; and
- means for aligning the bars with one another, comprising a thrust member (8) mobile in the longitudinal direction of the bars received in said receiving space and designed to act on first ends of said bars received in said receiving space,
said plant being **characterized in that** said means comprise a stop element (12) provided for acting on second ends of said bars opposite to said first ends so as to cause said bars to slide on one another as a result of the action of said thrust member, until said bars find themselves substantially aligned with one another.

2. The plant according to Claim 1, wherein said stop element (12) is provided for determining a force of reaction to the force of thrust exerted on said bars by said thrust member.

3. The plant according to any one of Claims 1 and 2, wherein said stop element is mobile in the same direction and sense as said movement by said thrust member, when subjected to a force of thrust in said direction and sense that exceeds a predetermined limit value.

4. The plant according to Claim 3, wherein said predetermined value is greater than the force, to be impressed on the bars by said thrust member, that is necessary to overcome the friction between one bar and another and displace said bars as far as a mutually aligned condition.

5. The plant according to any one of Claims 3 and 4, comprising control means (20) configured for interrupting the action of thrust of said member as soon as they detect said movement of said stop element.

6. The plant according to any one of Claims 3 to 5, wherein said stop element is carried by said bending unit, said bending unit being prearranged for being left freely mobile in said longitudinal direction during said action of thrust by said member.

7. The plant according to any one of the preceding claims, comprising a first bending unit (2) and a second bending unit (4), said first unit (2) carrying said thrust member (8) and said second unit (4) carrying said stop element (12).

8. The plant according to Claim 7, wherein said first bending unit is mobile in said longitudinal direction so as to perform said movement of said thrust member.

9. The plant according to any one of Claims 7 and 8, wherein said second bending unit is prearranged for being left freely mobile in said longitudinal direction, during the action of thrust by said member.

10. The plant according to Claim 1 or Claim 2, comprising a fixed stop element and control means configured for interrupting the action of the thrust member according to the electric power consumed by the drive means of said thrust member.

11. The plant according to Claim 10, wherein said control means are configured for interrupting the action of the thrust member as soon as the electric power consumed exceeds a pre-set limit value corresponding to generation of a force, by said thrust member, greater than the force necessary for overcoming the friction between one bar and another and displacing said bars up to a mutually aligned condition.

12. The plant according to any one of the preceding claims, comprising control means configured for interrupting the action of said thrust member as soon as a force generated by said thrust member is detected greater than the force necessary for overcoming the friction between one bar and another and displacing said bars up to a mutually aligned condition.

13. A method for aligning metal bars in a plant according to any one of Claims 1 to 9, comprising the steps of:

- receiving a number of bars to be bent, arranged parallel to one another and on top of one another in a plane orthogonal to the bending plane; and
- pushing first ends of said bars and in the meantime acting on second ends of said bars opposite to said first ends so as to cause said bars to slide on one another until said bars find themselves substantially aligned with one another.

14. The method according to Claim 13, wherein said step of pushing said first ends is interrupted when a force generated by said thrust member is detected greater than the force necessary for overcoming the friction between one bar and another and displacing said bars up to a mutually aligned condition.

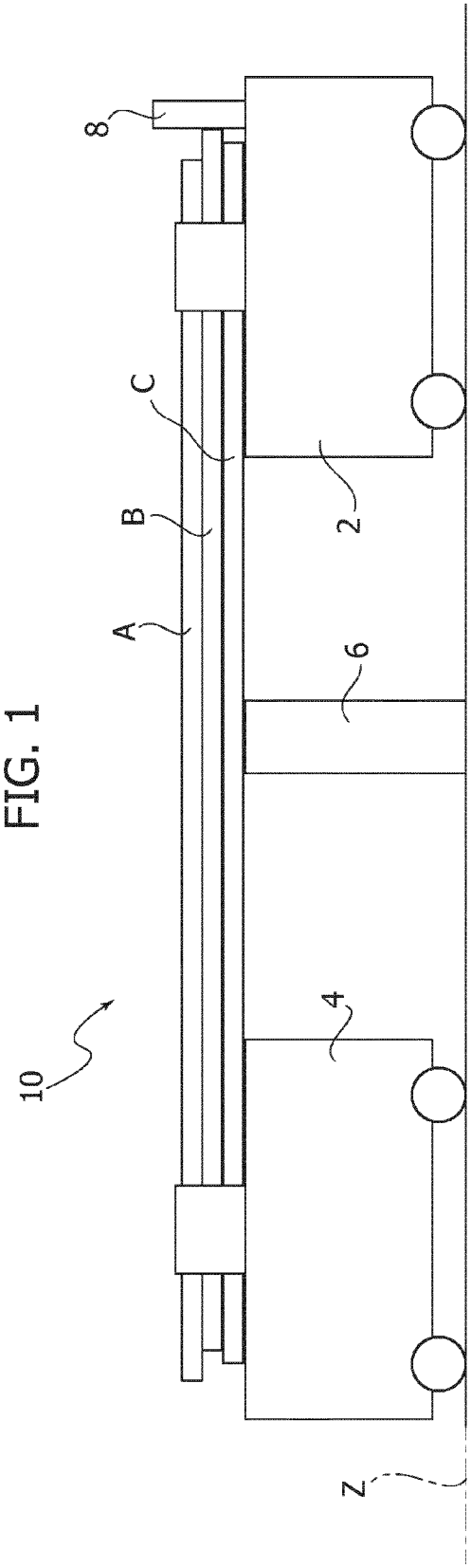

FIG. 1

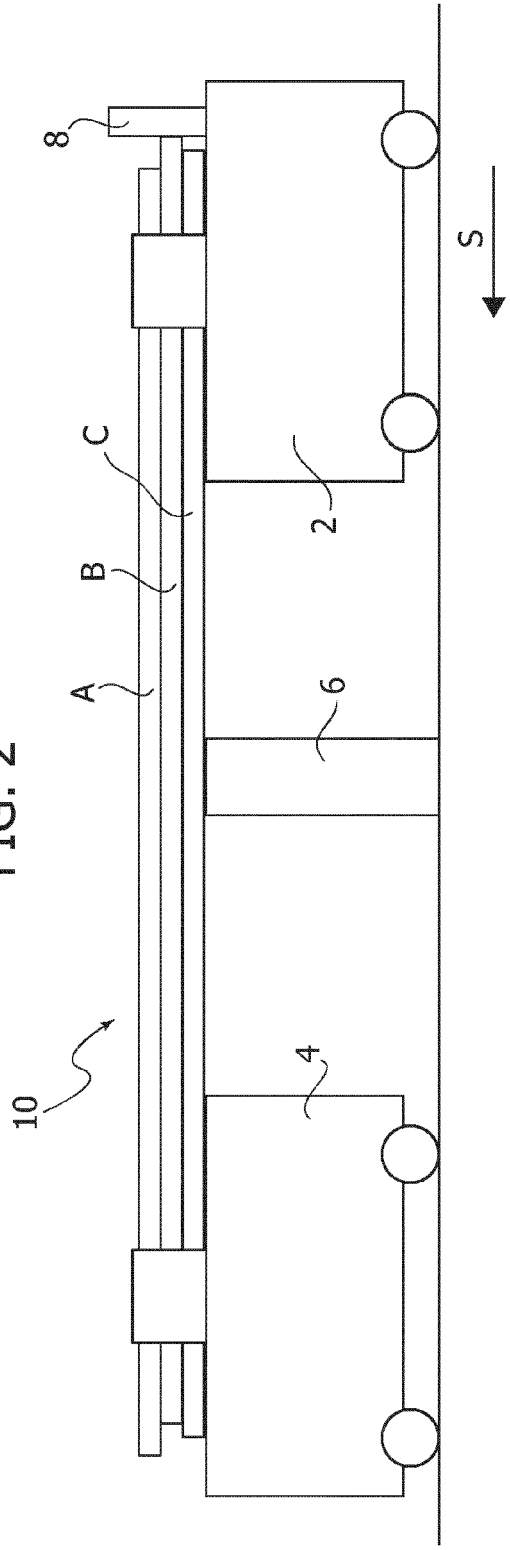

FIG. 2

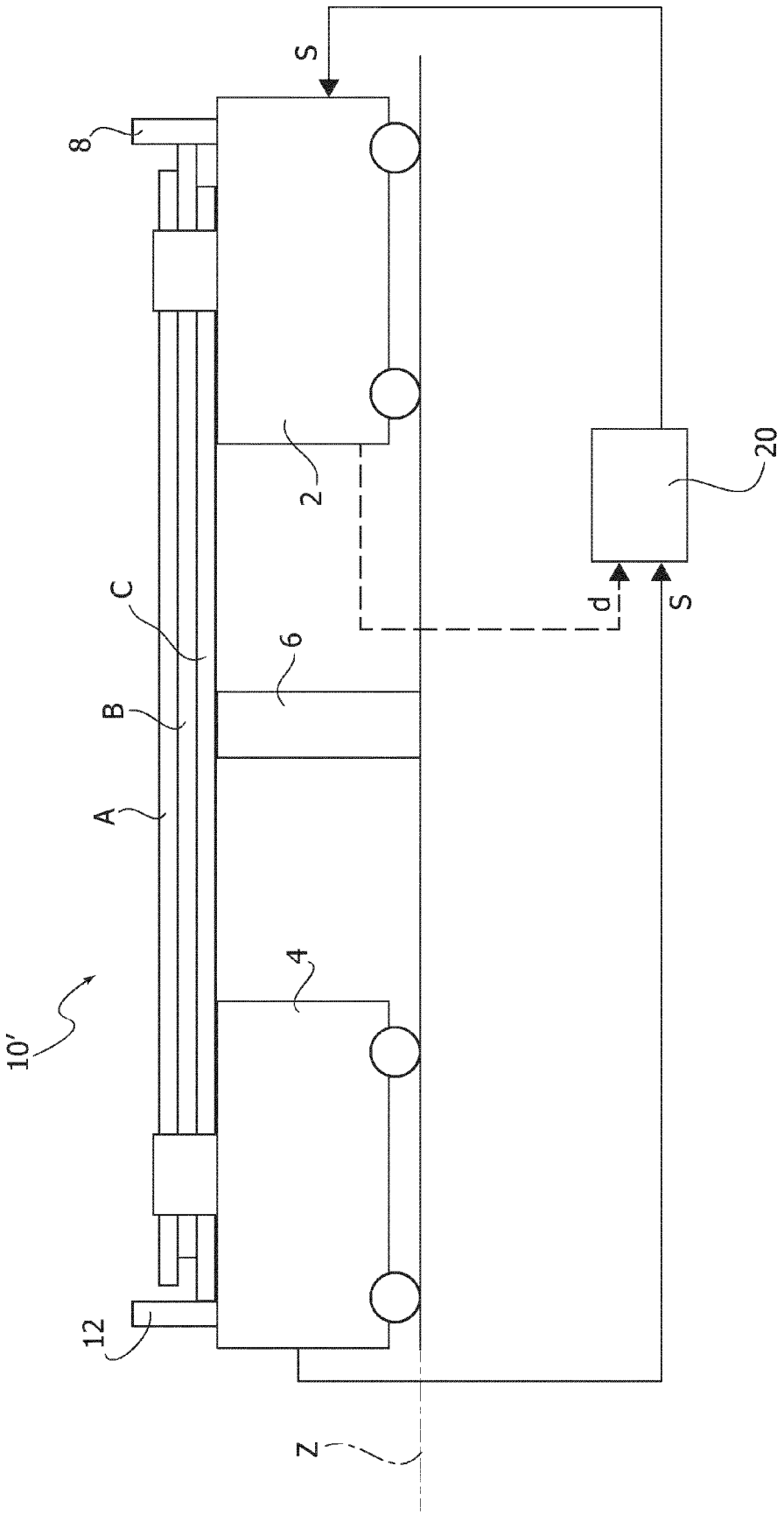

FIG. 3

FIG. 4

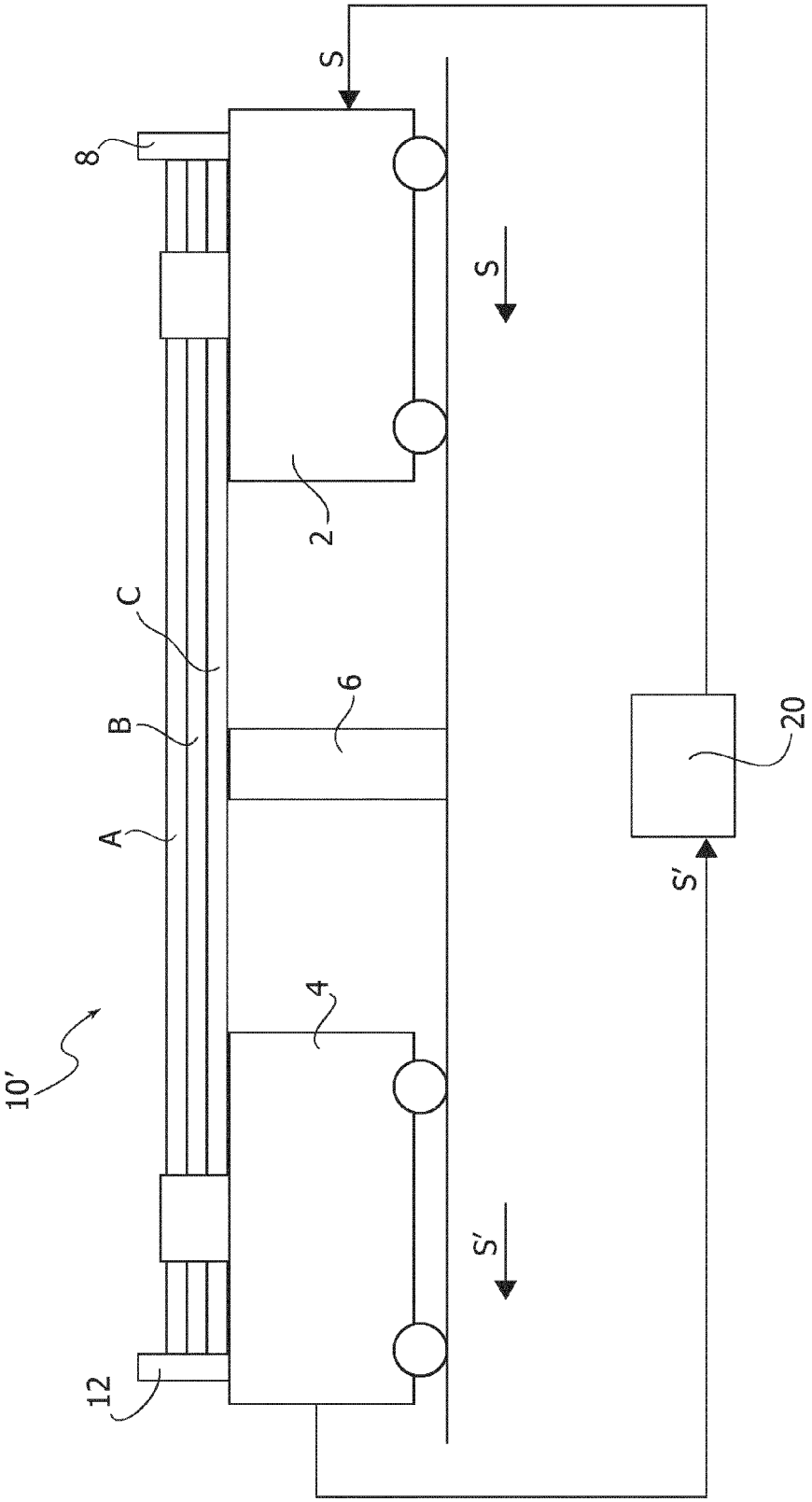

Europäisches Patentamt
European Patent Office
Office européen des brevets

EUROPEAN SEARCH REPORT

Application Number
EP 13 15 3175

DOCUMENTS CONSIDERED TO BE RELEVANT

Category	Citation of document with indication, where appropriate, of relevant passages	Relevant to claim	CLASSIFICATION OF THE APPLICATION (IPC)
Y,D	IT 1 360 184 B (OSCAM S.P.A.) 6 May 2009 (2009-05-06)	1-9,13, 14	INV. B21D43/00
A	* the whole document *	10-12	B21D11/12 B21F23/00

Y	EP 0 419 441 A1 (EVG ENTWICKLUNG VERWERT GES [AT]) 27 March 1991 (1991-03-27)	1-9,13, 14	B65G47/14 B21D43/28
A	* column 5, paragraph 11 - column 5, paragraph 20; figure 1 *	10-12	

Y	EP 0 188 850 A2 (E SRL SOCIETA AUTOMATISMI ELET [IT]) 30 July 1986 (1986-07-30)	1-4,13	
A	* figures 2-4 *	5-12,14	

Y	EP 0 564 446 A1 (EVG ENTWICKLUNG VERWERT GES [AT]) 6 October 1993 (1993-10-06)	1,2,13	
A	* column 4, line 1 - column 8, paragraph 23; figure 4 *	3-12,14	

Y	EP 0 648 577 A1 (OSCAM SPA [IT]) 19 April 1995 (1995-04-19)	1,2,13	
A	* column 5, line 37 - column 5, line 46; claim 5; figure 1 *	3-12,14	TECHNICAL FIELDS SEARCHED (IPC)
	-----		B21D
Y	EP 1 407 839 A1 (OSCAM SPA [IT]) 14 April 2004 (2004-04-14)	1,2,13	B21F B65G
A	* figure 1 *	3-12,14	B23Q

The present search report has been drawn up for all claims

1

Place of search	Date of completion of the search	Examiner
Munich	10 June 2013	Vinci, Vincenzo

CATEGORY OF CITED DOCUMENTS

X : particularly relevant if taken alone
Y : particularly relevant if combined with another document of the same category
A : technological background
O : non-written disclosure
P : intermediate document

T : theory or principle underlying the invention
E : earlier patent document, but published on, or after the filing date
D : document cited in the application
L : document cited for other reasons
.....
& : member of the same patent family, corresponding document

EPO FORM 1503 03.82 (P04C01)

ANNEX TO THE EUROPEAN SEARCH REPORT ON EUROPEAN PATENT APPLICATION NO. EP 13 15 3175

This annex lists the patent family members relating to the patent documents cited in the above-mentioned European search report.
The members are as contained in the European Patent Office EDP file on
The European Patent Office is in no way liable for these particulars which are merely given for the purpose of information.

10-06-2013

Patent document cited in search report		Publication date	Patent family member(s)			Publication date
IT 1360184	B	06-05-2009				
EP 0419441	A1	27-03-1991	AT	121324	T	15-05-1995
			AU	6055590	A	18-04-1991
			CA	2042021	A1	21-03-1991
			DE	59008926	D1	24-05-1995
			EP	0419441	A1	27-03-1991
			GR	91300061	T1	15-11-1991
			JP	H04501825	A	02-04-1992
			PT	95366	A	29-05-1992
			US	5182932	A	02-02-1993
			WO	9104113	A1	04-04-1991
EP 0188850	A2	30-07-1986	DE	3580264	D1	29-11-1990
			EP	0188850	A2	30-07-1986
			ES	8700115	A1	01-01-1987
			IT	1187529	B	23-12-1987
			JP	S61182715	A	15-08-1986
			US	4732066	A	22-03-1988
EP 0564446	A1	06-10-1993	NONE			
EP 0648577	A1	19-04-1995	DE	69402284	D1	30-04-1997
			DE	69402284	T2	09-10-1997
			EP	0648577	A1	19-04-1995
			ES	2101477	T3	01-07-1997
			IT	1260998	B	29-04-1996
EP 1407839	A1	14-04-2004	AT	395151	T	15-05-2008
			DK	1407839	T3	28-07-2008
			EP	1407839	A1	14-04-2004
			ES	2305377	T3	01-11-2008

EPO FORM P0459

For more details about this annex : see Official Journal of the European Patent Office, No. 12/82

REFERENCES CITED IN THE DESCRIPTION

This list of references cited by the applicant is for the reader's convenience only. It does not form part of the European patent document. Even though great care has been taken in compiling the references, errors or omissions cannot be excluded and the EPO disclaims all liability in this regard.

Patent documents cited in the description

- IT 1360184 **[0002] [0003] [0010] [0018]**