No. 755,484. PATENTED MAR. 22, 1904.

W. HARGROVE.

CLOTHES HORSE.

APPLICATION FILED APR. 14, 1903.

NO MODEL. 2 SHEETS—SHEET 1.

FIG. 4.

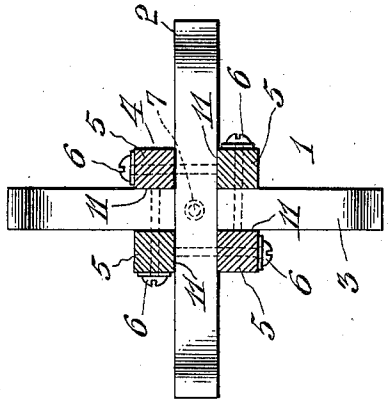

FIG. 5.

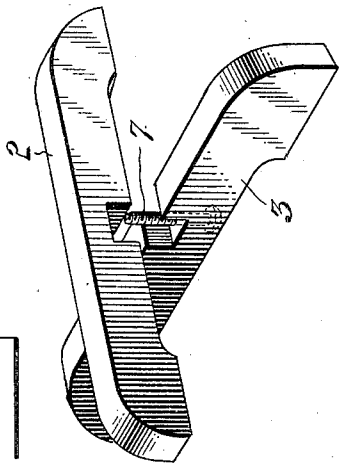

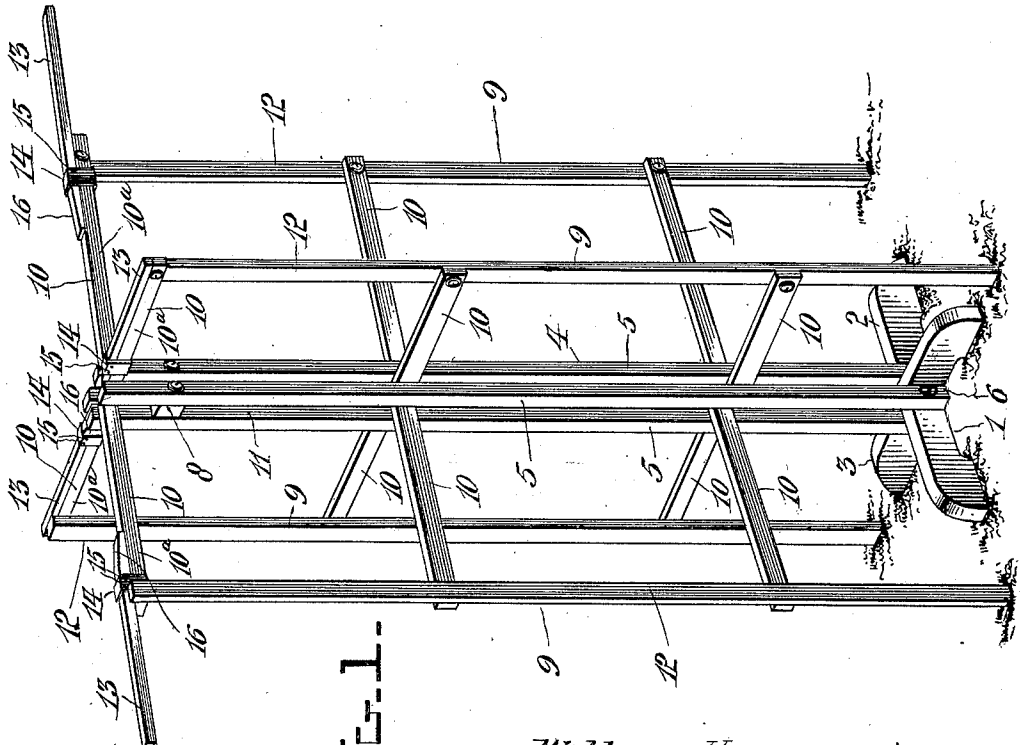

FIG. 1.

Witnesses:

John F. Deufferwald

F. D. Ammen

William Hargrove, Inventor

By Marion & Marion

Attorneys

THE NORRIS PETERS CO., PHOTO-LITHO., WASHINGTON, D. C.

No. 755,484. PATENTED MAR. 22, 1904.

W. HARGROVE.

CLOTHES HORSE.

APPLICATION FILED APR. 14, 1903.

NO MODEL. 2 SHEETS—SHEET 2.

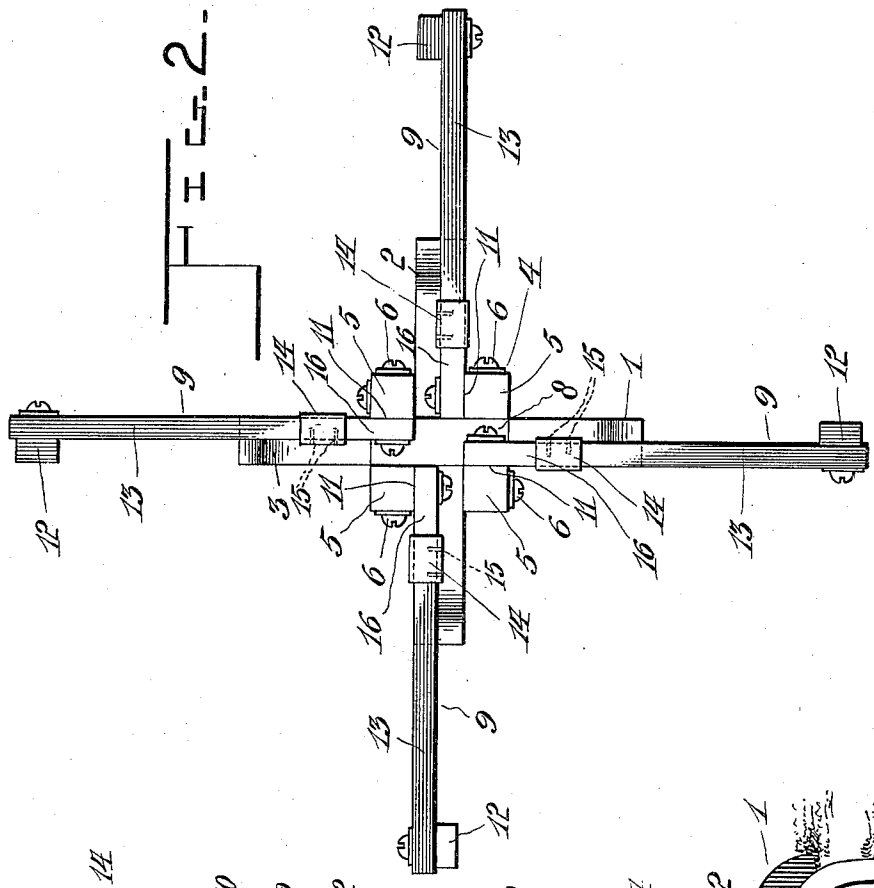

FIG. 2.

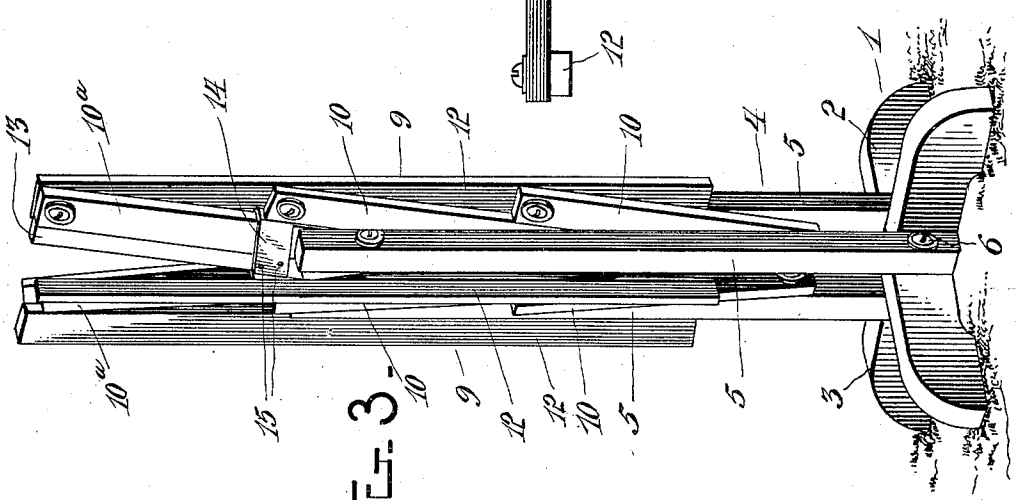

FIG. 3.

Witnesses:

John F. Deufferwick

F. D. Ammen

William Hargrove, Inventor

By Marion & Marion

Attorneys

THE NORRIS PETERS CO., PHOTO-LITHO., WASHINGTON, D. C.

No. 755,484. Patented March 22, 1904.

UNITED STATES PATENT OFFICE.

WILLIAM HARGROVE, OF MONTREAL, CANADA, ASSIGNOR TO JOHN A. HARRISS, OF NEW YORK, N. Y.

CLOTHES-HORSE.

SPECIFICATION forming part of Letters Patent No. 755,484, dated March 22, 1904.

Application filed April 14, 1903. Serial No. 152,562. (No model.)

To all whom it may concern:

Be it known that I, WILLIAM HARGROVE, a subject of the King of Great Britain, residing in the city and district of Montreal, Province of Quebec, Canada, have invented certain new and useful Improvements in Clothes-Horses; and I do hereby declare that the following is a full, clear, and exact description of the invention, such as will enable others skilled in the art to which it appertains to make and use the same.

My invention relates to a clothes-horse or rack such as used in laundries and households for drying clothes or table-linen, &c., which may be hung upon the same.

The object of the invention is to provide a device for the purpose mentioned which is very simple in construction and normally adapted to be kept in a folded condition, but which may be readily extended and set up to receive articles to be dried.

In its general construction the invention comprises a centrally-disposed standard to which are attached a plurality of movable frames which normally fold against the said standard, but may be extended from the same to afford opportunity to support the articles to be dried. These frames are themselves extensible or have extensible parts.

The invention consists in the construction and combination of parts to be more fully described hereinafter and definitely set forth in the claim.

In the drawings, which fully illustrate my invention, Figure 1 represents the clothes-horse in perspective, this view representing the same as in an extended or open position. Fig. 2 is a plan representing the device in an extended condition. Fig. 3 is a perspective representing the device as folded or unextended. Fig. 4 is a horizontal cross-section taken through the standard of the horse just above the base. Fig. 5 is a perspective of the parts of the base.

Throughout the drawings and specification the same numerals of reference indicate like parts.

Referring more particularly to the parts, 1 represents the base of the device, which consists, preferably, of two crossed members 2 and 3, which make a mortised joint with each other, as indicated. The standard 4, which is attached to this base, consists of four upright scantlings 5, preferably square in section, and which are attached at their lower extremities, respectively, in the four angles formed in the aforesaid members 2 and 3. Each of these upright members 5 is connected by means of a suitable screw 6 to the base, and the two members 2 and 3, which constitute the base, may be connected by means of a screw 7, which passes upwardly from the bottom in the manner indicated. The four uprights 5 are attached near their upper extremities to a block or head 8.

The standard 4 constitutes a support for the folding frames 9. These frames comprise pivoted arms 10, there being three in connection with each frame, which arms are pivoted upon the inner faces 11 of the uprights 5 in the manner indicated, the uppermost frames being located, preferably, above the aforesaid head 8. At their extremities these arms are connected by upright members 12, being pivotally connected with the same. It should be understood that the members 10 occupy a horizontal position when the frames 9 are extended, as indicated in Fig. 1; but these frames may be folded up against the standard 4, in which position these standards are shown in Fig. 3. From this arrangement evidently the available hanging-space for the article to be dried may be varied, as desired, and also to suit the circumstances with respect to floor-space which the close-rack may be allowed to occupy.

The uppermost bars 10^a of the frames 9 are also provided with extensible members 13, which are disposed above the said bars or arms and are connected thereto at their inner extremities by brackets or sleeves 14, which brackets are attached, as indicated at 15, to the bars 13, and are adapted to slide upon the arms 10^a, as will be readily understood. From this arrangement it should be evident that these arms 13 may be extended, as desired, to increase the hanging-space. These extension-arms 13 are beveled or inclined, as indicated

at 16, upon their inner extremities, so that the compactness of the article when folded is enhanced.

In Fig. 3 the article is represented in folded position, and it should be evident that when the frames are so disposed the article occupies very little space. Also it will be apparent that when the frames 9 are in their extended condition the lower extremities of the members 12 rest upon the floor and are adapted to support the arms 10 in a substantially horizontal position. When folded in the manner indicated, the device is well adapted for shipping or packing to move.

While I have shown in the accompanying drawings the preferred form of my invention, it will be understood that I do not limit myself to the precise form shown, for many of the details may be changed in form or position without affecting the operativeness or utility of my invention, and I therefore reserve the right to make all such modifications as are included within the scope of the following claim or of mechanical equivalents to the structures set forth.

Having described my invention, what I claim, and desire to secure by Letters Patent, is—

In a clothes-horse, in combination, a base composed of two sections crossed substantially at their middle, standards attached to said base in the angles between said sections, a block disposed between said standards near the upper extremities thereof, to which said standards attach, jointed frames having arms pivotally attached to the respective inner faces of said standards, said frames being adapted to fold into the spaces between said standards.

In witness whereof I have hereunto set my hand in the presence of two witnesses.

WILLIAM HARGROVE.

Witnesses:
M. McALEER,
T. MYNARD.