Oct. 23, 1934. O. C. FUNDERBURK 1,977,721

CARBURETOR

Filed Jan. 28, 1931 5 Sheets-Sheet 1

Fig. 1

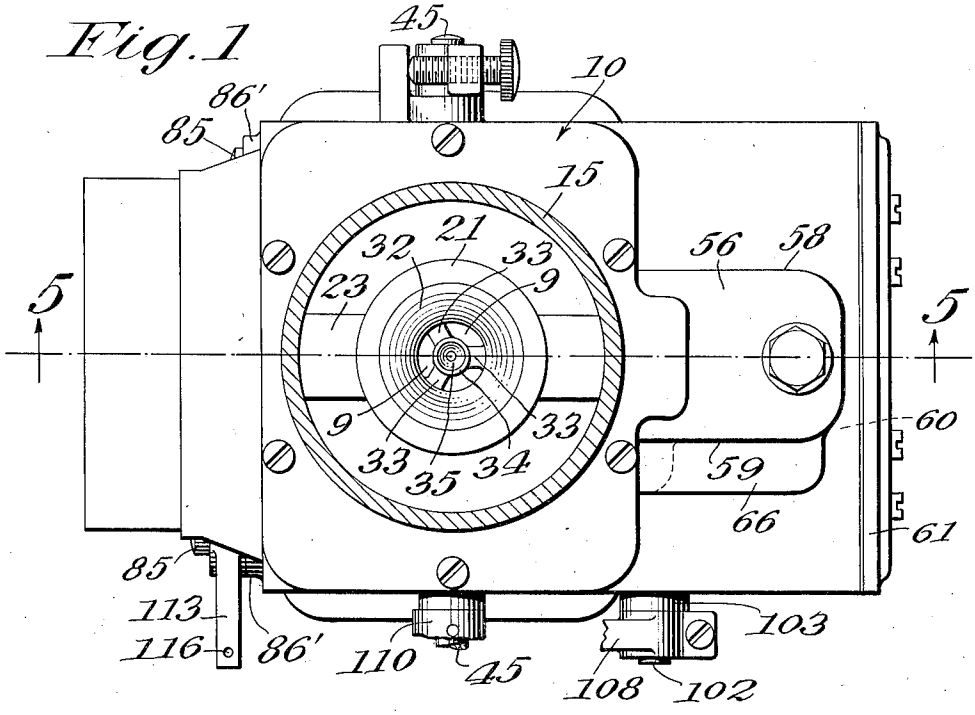


Fig. 7

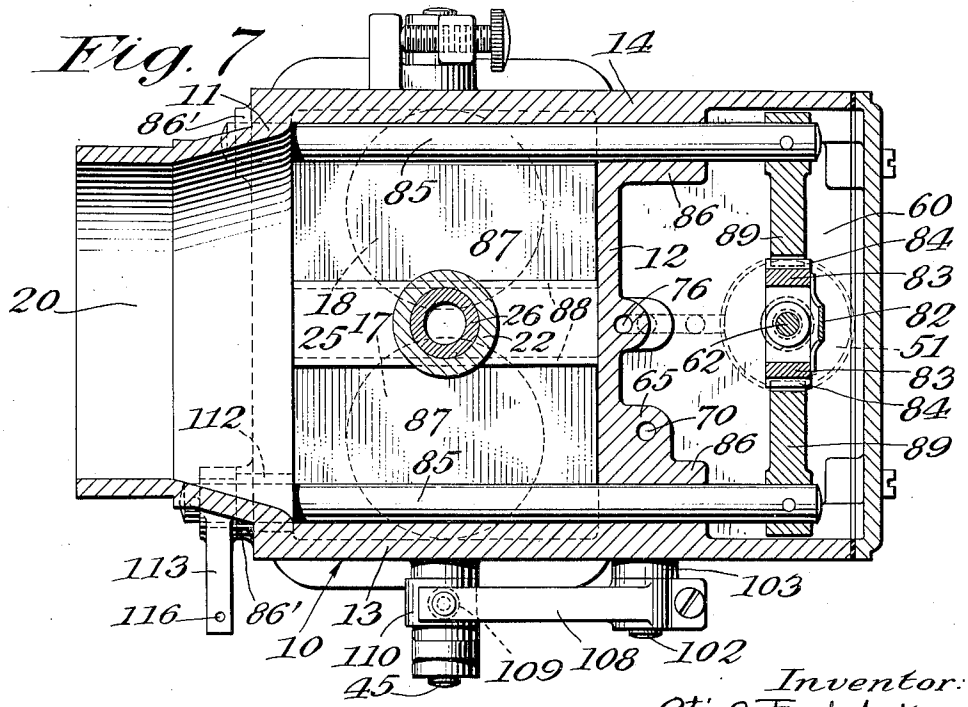


Inventor:
Otis C. Funderburk

By Macleod, Calvin, Copeland & Dike
Attorneys.

Oct. 23, 1934. O. C. FUNDERBURK 1,977,721

CARBURETOR

Filed Jan. 28, 1931 5 Sheets-Sheet 2

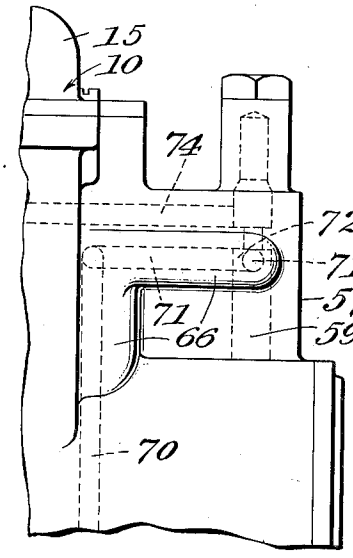


Fig. 3




Fig. 2

Fig. 4

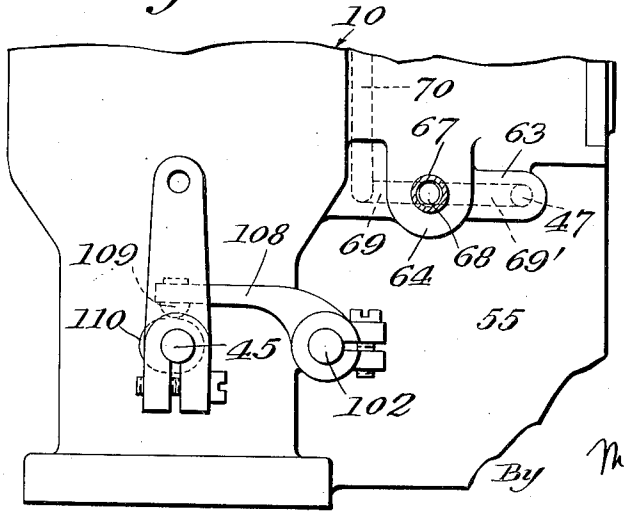


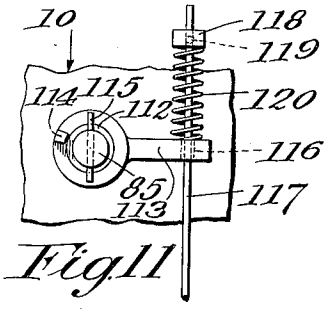


Fig11

Inventor:
Otis C. Funderburk

By Macleod, Calver, Copeland & Dike

Attorneys.

Oct. 23, 1934. O. C. FUNDERBURK 1,977,721

CARBURETOR

Filed Jan. 28, 1931 5 Sheets-Sheet 3

Fig. 5

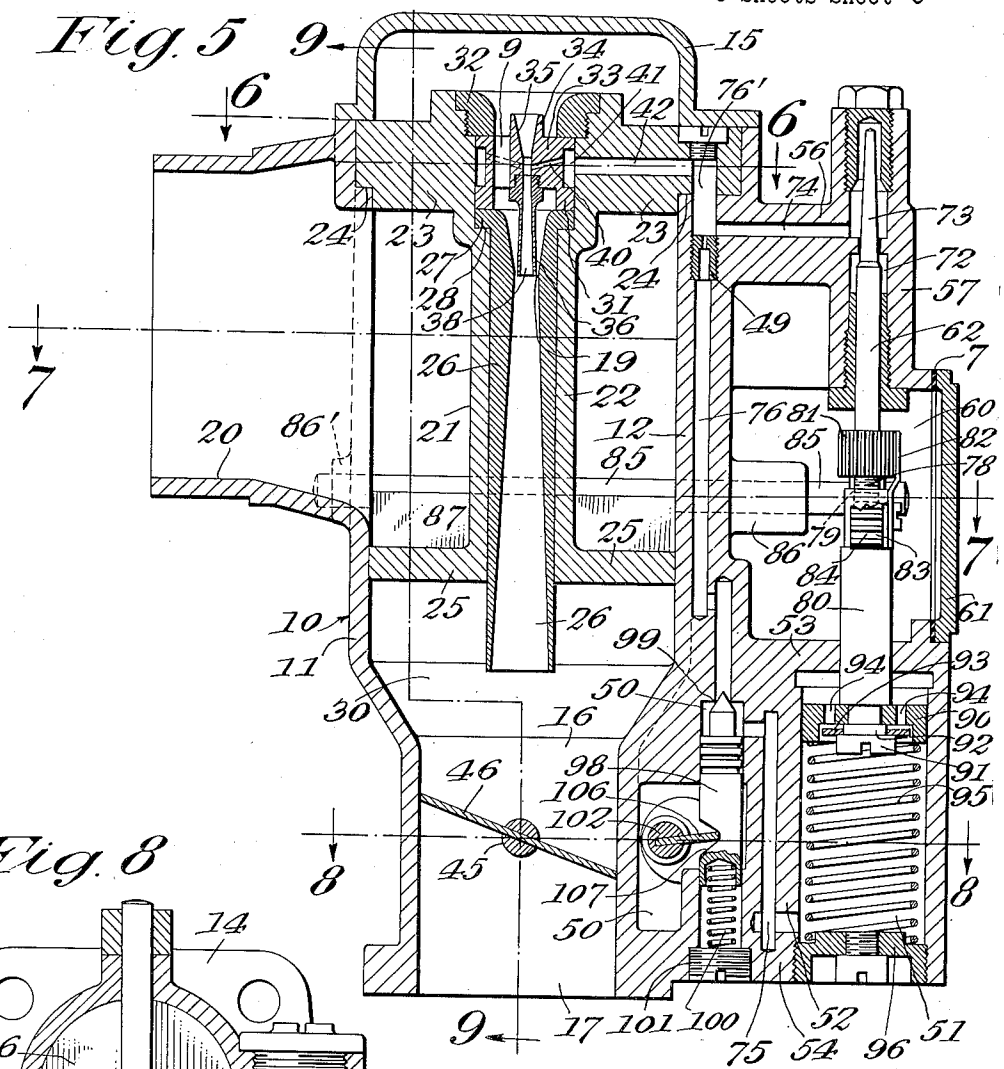


Fig. 8

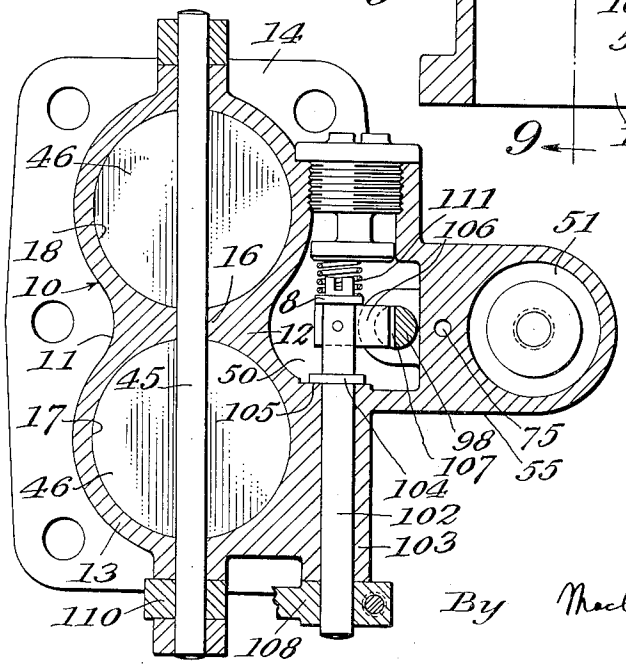


Inventor:
Otis C. Funderburk

By Macleod, Calver, Copeland & Dike

Attorneys.

Oct. 23, 1934. O. C. FUNDERBURK 1,977,721

CARBURETOR

Filed Jan. 28, 1931 5 Sheets-Sheet 4

Fig. 10

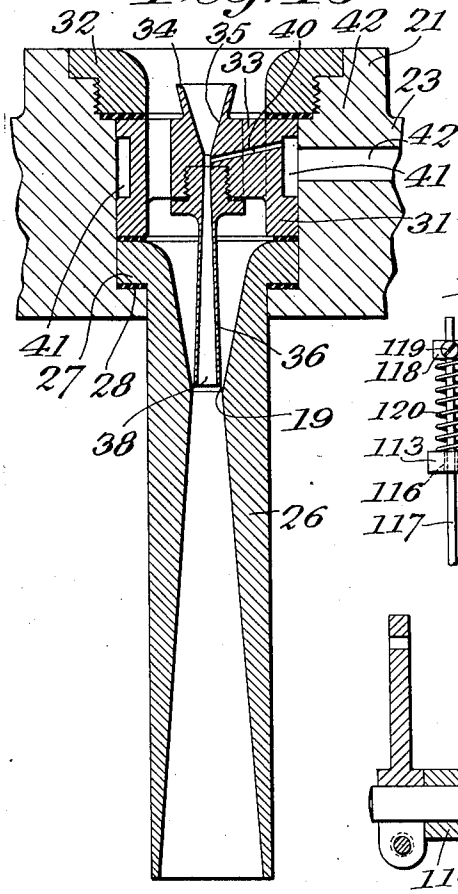


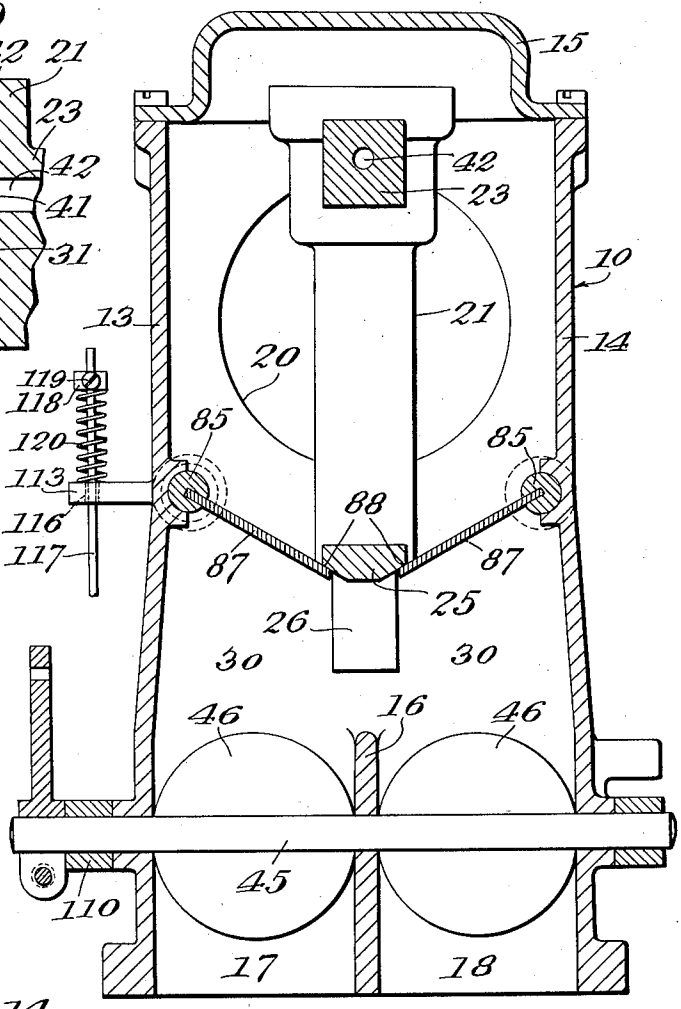


Fig. 9

Fig. 6

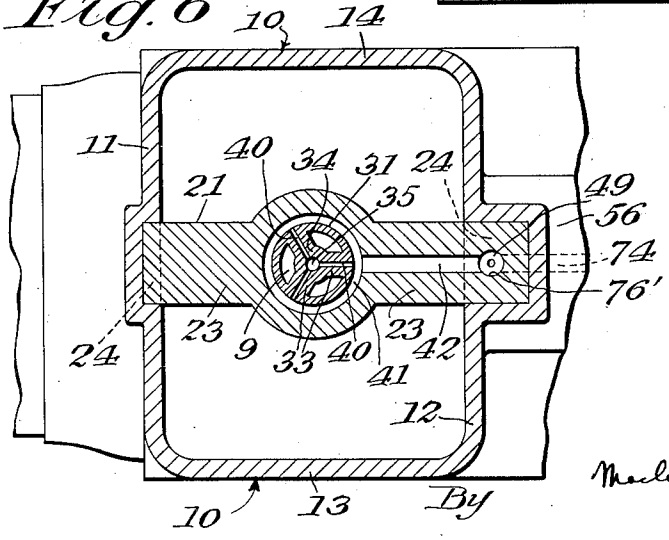


Inventor:
Otis C. Funderburk
Macleod, Calver, Copeland & Dike
Attorneys

Oct. 23, 1934. O. C. FUNDERBURK 1,977,721

CARBURETOR

Filed Jan. 28, 1931 5 Sheets-Sheet 5

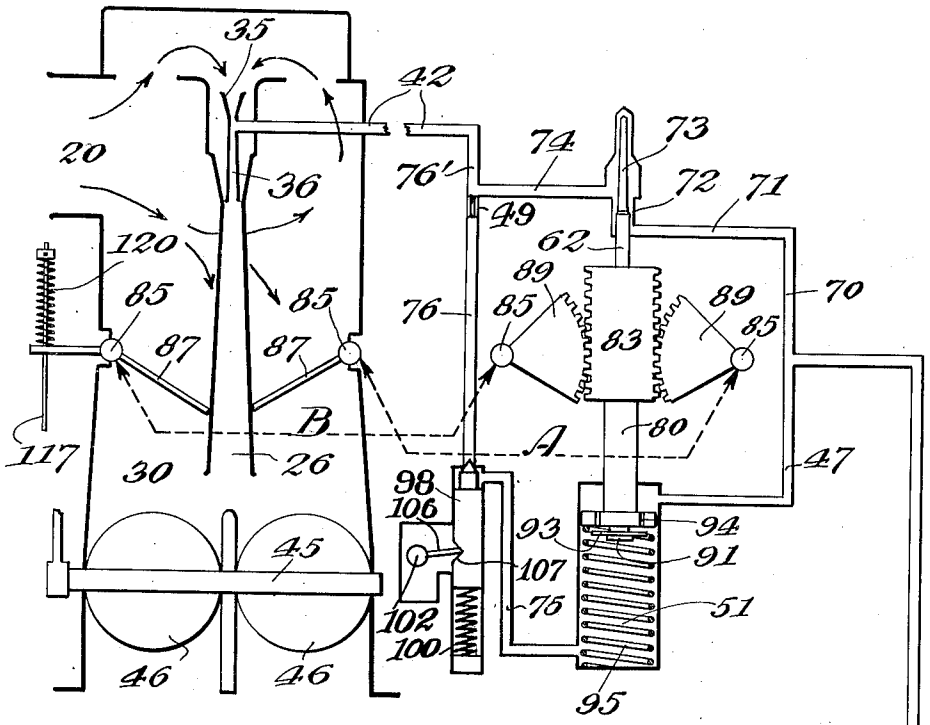


Fig. 12

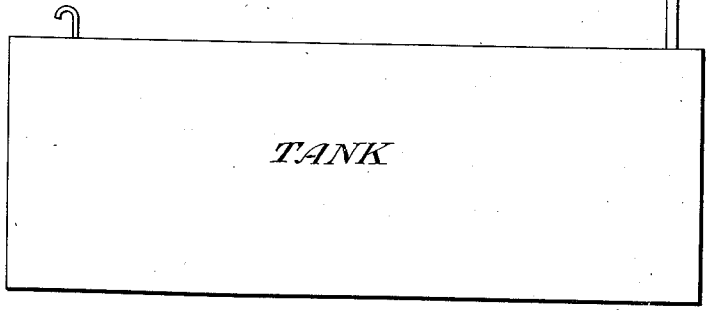


Inventor:
Otis C. Funderburk

By Macleod, Calver, Copeland & Dike
Attorneys.

Patented Oct. 23, 1934

1,977,721

# UNITED STATES PATENT OFFICE

1,977,721

## CARBURETOR

Otis C. Funderburk, Boston, Mass., assignor to Self Feeding Carburetor Company, Inc., Boston, Mass., a corporation of Massachusetts

Application January 28, 1931, Serial No. 511,768

15 Claims. (Cl. 261—34)

This invention relates to an improved system for supplying a combustible mixture to internal combustion engines.

A primary object of the invention is to convey fuel from a main source of supply, such as the tank usually located at the rear end of an automobile, directly and in continuous flow to a mixing chamber, normally above the level of the fuel in the tank, and to induce such flow by utilizing suction in the mixing chamber, and thereby to eliminate any form of gravity feed, fuel pump, and float chamber or equivalent intermediate constant level source of supply or other means between the mixing chamber and the tank for intermittently stopping the flow of fuel from the tank.

Another primary object is to regulate the flow of fuel and the flow of air into the mixing chamber so as to provide a combustible mixture at all times, and to control such regulation automatically by variations of suction in the mixing chamber.

It has been the common practice to embody an intermediate fuel reservoir as a constant level source of supply, such as a float chamber or equivalent element forming an integral or associated part of a carburetor, and from which fuel is fed to the carbureting elements of the carburetor. Ordinarily it is assumed, in carburetor design, that some means will be provided for bringing fuel to the carburetor, or its reservoir, but the particular method adopted has been immaterial, whether by pressure in the tank, fuel pump, gravity feed, vacuum tank, or a partial vacuum in the upper portion of the reservoir, since in every case some form of check valve has been employed to stop the flow of fuel from the tank, intermittently, under predetermined conditions, as when the fuel rises to a predetermined level.

In the present invention, where the fuel is conducted directly from the tank to the mixing chamber without the intervention of an intermediate, constant level source of supply, some of the disadvantages of other methods are avoided, such as flooding, float chamber assembly and complicated mechanisms, the difficulty of maintaining even pressure or depression in a float chamber or equivalent element, and the intermittent and irregular flow of fuel due to the stopping and starting of the entire body of fuel throughout the supply line from the tank. In giving up the apparent advantages of a constant level, continuous feed, intermediate float chamber heretofore considered an essential part of every system, new and different problems arose, such as the wide variation, compared with a constant level supply, in the height to which fuel must be raised, the necessity of maintaining the flow continuously and without interruption, even under the most adverse conditions of operation, and overcoming the lag in the flow of fuel all the way from the tank, a long distance compared with the flow from the float chamber of a carburetor, all without appreciably increasing the suction in the intake manifold of the engine.

The general principles applied in accomplishing the above objects may be illustrated by way of example as follows. A continuous conduit, preferably effectively closed to the atmosphere, leads from the fuel in the tank to the throat or restricted portion of a Venturi tube, having one end open to the atmosphere and the other end discharging into a mixing chamber formed by a casing attachable to the intake manifold of the engine. The throttle valve between the mixing chamber and the manifold provides a control by which the depression in the manifold may be increased for braking purposes or reduced while operating under a load, and by which such depression may be communicated to the mixing chamber. By appropriate design of flow passages and regulation of air admitted to the mixing chamber, the depression therein can be reduced to any given minimum amount desired.

The fuel conduit, and its discharge orifice in the venturi, are of a size sufficient to pass the maximum amount of fuel that can be consumed by the engine under any given conditions of operation. The size and shape of the Venturi passages are such that an assumed minimum depression in the mixing chamber will induce an air flow through the venturi and thus create a depression in the discharge orifice of the fuel conduit, sufficient to induce such maximum flow of fuel and to lift fuel the greatest vertical distance necessary under the most adverse conditions, such as an automobile going up a steep grade with wide open throttle. Since minimum depression in the mixing chamber is capable of inducing maximum fuel flow, means are provided to restrict the flow to the requirements of the engine, when less than a maximum amount of fuel is needed.

Suitable means for accomplishing the results achieved and further objects of the invention will be made clear in the following description and specifications: in which,

Fig. 1 is a top plan view, partly in section, of the casing forming part of the fuel system embodying the invention;

Fig. 2 is a rear end elevational view of the same partly broken away;

Figs. 3 and 4 are fragmentary side elevational views looking from the left of Fig. 2;

Fig. 5 is a sectional elevational view taken upon the line 5—5 of Fig. 1;

Figs. 6, 7 and 8 are sectional views taken upon the lines 6—6, 7—7 and 8—8 of Fig. 5 respectively;

Fig. 9 is a sectional view taken upon the line 9—9 of Fig. 5;

Fig. 10 is an enlarged sectional view of a portion of the casing forming part of the fuel system embodying the invention;

Fig. 11 is a fragmentary front end elevational view; and

Fig. 12 is a diagrammatic view of one embodiment of a fuel system embodying the invention, certain of the parts at the rear of the mixing chamber being shown at the right with the corresponding elements connected by dotted lines.

One embodiment of the invention is illustrated in the accompanying drawings and comprises a tubular casing 10 having walls 11, 12, 13 and 14 (Figs. 5 and 9). A web 16 extends between the walls 11 and 12 near the bottom thereof to divide the lower portion of the interior of the casing into two passages 17 and 18 leading to the manifold of the engine. The wall 11 is provided with an opening 20 providing an air inlet. A shaft 45 extends through the passages 17 and 18 and is rotatably mounted in the walls 13 and 14 and the web 16. A throttle valve 46 for controlling the flow of a mixture of air and fuel into the manifold is positioned in each of the passages 17 and 18 and each is secured upon the shaft 45.

A member 21 is positioned within the casing and comprises a hollow centrally located sleeve 22 provided at its upper end with a pair of outwardly extending arms 23 adapted to rest upon shoulders 24 provided in the opposite walls 11 and 12. An inverted cup-shaped cover 15 is suitably secured to the top of the casing to abut the arms 23 of the member 21, thus enclosing a passage leading from the air inlet to the interior of the sleeve 22. The lower end of the sleeve 22 is provided with a pair of arms 25 extending therefrom into engagement with the walls 11 and 12 and defining the upper boundary of a mixing chamber 30. A Venturi tube 26 is fitted within the sleeve 22 and is provided at its upper end with an outwardly extending flange 27 adapted to rest upon a shoulder 28 on the sleeve. The lower end of the Venturi tube 26 projects below the lower ends of the sleeve 22 into the mixing chamber 30.

A ring 31 (Figs. 1, 5, 6 and 10) is positioned within the member 21 with its lower face resting upon the flange 27 and is held in place by a washer 32 having threaded engagement with the member 21. A plurality of spoke-like members 33 project inwardly from the ring 31 and are connected at their inner ends to a hub-like member 34 having a tapered passage 35 therein adapted to receive air directly from the air inlet. A member 36 depends from and is secured to the lower face of the hub 34 and is provided with a flared passage 38. The passages 35 and 38 cooperate to form a Venturi passage. The lower end of the member 36 terminates adjacent the throat of the Venturi tube 26 to provide an air passage 19 therebetween which communicates with the air inlet through the passages 9 formed between the spoke-like members 33. A fuel passage 40 is provided in each of the spoke-like members 33 and each extends from the passage 35 to an annular passage 41 formed in the ring 31. The annular passage 41 communicates with a passage 42 extending through one of the arms 23 at the top of the member 21.

The casing 10 is provided with a hollow projection (Figs. 2 and 5) extending laterally from near the bottom of the wall 12 to provide a chamber 50 and a reservoir 51 separated by a web 52 and enclosed at their top and bottom by walls 53 and 54 respectively and at their sides by a U-shaped wall 55. An inverted cup-shaped projection extends laterally from near the top of the wall 12 of the casing and comprises a top wall 56, end wall 57 and side walls 58 and 59. The side walls 58 and 59 extend downwardly and outwardly and then inwardly to meet the top wall 53 of the lower lateral projection on the casing to provide a chamber 60 of substantially hexagonal cross section which is closed at its outer end by a cover 61 hermetically sealed by a gasket 7. The wall 55 of the lower lateral projection is provided with a horizontally extending rib 63 having an enlargement 64 and connected at its inner end with a vertically extending rib 65 on the wall 12 of the casing. The upper end of the rib 65 is connected with a rib 66 formed upon the wall 59 near the top thereof.

A threaded fuel connecting passage 68 (Figs. 2, 3, 4 and 5) is provided in the enlargement 64 to receive one end of a fuel supply line 67 the other end of which is connected directly with the usual fuel supply tank located at the rear of a motor vehicle, which together with the extension thereof form a continuous passage for fuel from the tank. The fuel connecting passage 68 communicates with the junction of passages 69 and 69′ formed in the ribs 63, the latter of which communicates at one end with the reservoir 51 and the former of which communicates with a passage 70 formed in the rib 65 which in turn communicates with a passage 71 formed in the rib 66. The passage 71 connects with the passage 71′ which communicates with a passage 72 in which is movably mounted a restricting member, such as a metering pin 73. A passage 74 formed in the top wall 56 and leading from the passage 72 is connected with the passage 42 by a passage 76′. A passage 75 in the wall 52 connects the bottom of the reservoir 51 with the top of the chamber 50 and the chamber 50 in turn is connected by a passage 76 with the passage 76′. A restricting member 49 is positioned in the passage 76. Thus, a main fuel passage or conduit is provided leading directly from the tank and comprises passages 67, 68, 69, 70, 71, 71′, 72, 74, 76′ and 42. A branch fuel passage comprising two parts, one leading from the fuel connecting passage 68 comprises passages 69′ and 47 leading to above the bottom of the reservoir 51, and the other part comprises passage 75 leading from the bottom of the reservoir to the chamber 50 and passage 76 leading from the chamber 50 and communicating with passages 76′ and 42.

The metering pin 73 is provided with an extension 62 which extends downwardly through the end wall 57 into the chamber 60 and is pro-

vided with a threaded portion 78 at its lower end adapted to be received in a threaded hole 79 in the upper end of a rod 80 extending downwardly through the wall 53 into the reservoir 51. A knurled adjusting collar 81 is fixed on the metering pin 73. The upper end of the rod 80 is provided with an enlargement formed by projections 83 extending radially therefrom at diametrically opposite points. A spring lock 82 is secured upon the enlargement 83 and is adapted to engage the knurled collar 81 to maintain the metering pin in adjusted position.

The outer edge of each of the projections 83 is provided with teeth 84 forming a rack (Figs. 2, 5, 7 and 9). Shafts 85 are rotatably mounted in bearings 86 formed near each end of the wall 12 of the casing and are adapted to engage bearings 86' formed in the wall 11. Air valves 87 are fixed upon each of the shafts 85 and, preferably, are inclined downwardly and inwardly to engage seats 88 formed upon the arms 25 of the member 21 and control the flow of air directly from the air inlet past the discharge end of the Venturi tube 26 to the mixing chamber 30. The other ends of the shafts 85 project into the chamber 60 and each have a sector gear 89 mounted thereon for engagement with one of the racks 84.

A plunger 90 (Fig. 5) is mounted upon the lower end of the rod 80 within the reservoir 51 and is held against the end thereof by a screw 91 having a shoulder 92 adapted to engage the lower face of the plunger. A valve 93 in the form of a washer surrounds the enlargement forming the shoulder on the screw 91 and rests normally against the head of the screw. Ports 94 are provided in the plunger opposite the valve 93. A spring 95 is positioned in the reservoir 51 with one end in engagement with the plunger 90 and its other end engaging a plug 96 threaded in the wall 54.

An economizer valve 98 is movably mounted in the chamber 50 (Figs. 4, 5 and 8) and is adapted to control communication between the chamber 50 and passage 76. The valve 98 normally is held against its seat 99 by a spring 100 one end of which engages the valve 98 and the other end of which engages a plug 101 threaded in the wall 54. A shaft 102 is rotatably mounted in a boss 103 on the casing and extends into the chamber 50. A collar 104 is fixed on the shaft 102 to engage a seat 105 formed upon the wall of the chamber 50. The collar 104 is maintained against its seat by a spring 111 surrounding the end of the shaft 102 with one end engaging a shoulder 8 on the shaft and its other end engaging a plug in the opposite wall of the chamber 50. An arm 108 is fixed upon the shaft 102 outside of the casing and is provided with a cam follower 109 adapted to engage a cam 110 fixed upon the throttle valve shaft 45. One end of one of the shafts 85 is rotatably mounted in a bushing 112 (Figs. 2, 7 and 11) fixed in the casing 10. An arm 113 is rotatably mounted on the bushing and is provided with a lug 114 adapted to engage a pin 115 projecting from the shaft 85. The end of the arm 113 is provided with a hole 116 in which a wire 117 is slidably mounted. A stop 118 is adjustably secured upon the end of the wire by a set screw 119. A spring 120 surrounds the wire with one end engaging the stop 118 and its other end engaging the arm 113.

When the engine is at rest, all the fuel in the system is drained back to the tank by gravity, except the small amount trapped in the dash pot reservoir 51, chamber 50, and fuel passages directly connected therewith and below the level of the fuel connecting passage 68. Air enters the main fuel passage, past the metering pin, into the supply line 67, and thus serves as an air vent preventing fuel in the reservoir 51 from being syphoned back to the tank, and assuring an adequate supply remaining in the reservoir for starting purposes.

When it is desired to start the motor the throttle valves 46 are partially opened. The choke, which is operatively connected with the wire 117, is then pulled out to compress the spring 120 and cause the arm 113 to rotate to bring the lug 114 into engagement with the pin 115 to lock the air valves against their seats 88. At the same time the metering pin 73 almost but not entirely closes the main fuel passage, and the dash pot piston 90 is held in a fixed position. Opening of the throttle actuates the arm 108 to cause the arm 106 to move the valve 98 off its seat and thereby open communication between the fuel reservoir 51 and the mixing chamber 30. When the starter is actuated suction is created by the motor to create a high depression in the passages 40 and create a partial vacuum throughout the fuel passages and the supply line and draw fuel from the tank. To overcome the lag in this initial flow through a relatively great distance, the fuel in the reservoir 51 is available, drawn by suction through the passage 75, chamber 50, passages 76, 76' and 42 where it is delivered to the annular reservoir 41 and thence is supplied through the passages 40, Venturi passage 38 and Venturi tube 26 to the mixing chamber 30. At the same time air is drawn through the air inlet 20 and through the Venturi tube formed by the passages 35 and 38 as well as through the passages 9 and restricted passage 19 between the end of the member 36 and the throat of the Venturi tube 26 and thence through the Venturi tube 26. Up to this point all fuel drawn into the mixing chamber has been supplied by reservoir 51.

As soon as the fuel from the tank reaches the fuel connecting passage 68, there are two passages provided, a restricted passage past the metering pin, and the by-pass passage through reservoir 51, through both of which fuel will flow to the mixing chamber, in quantities depending on the restriction in each passage. The dash pot assembly, comprising reservoir 51 and connecting passages, thus constitutes not only a starting well, but also a by-pass around the metering pin. In this capacity it continues to operate at all times while valve 98 is open, the reservoir being virtually an enlargement of the by-pass conduit, through which, under the choking conditions given above, for starting the engine, substantially all of the fuel passes in a continuous flow. It will be noted that the check valve 93 permits fuel to flow in one direction only, thus operating as a one way valve. When the motor begins to operate under its own power the choke is pushed in, thereby unlocking the air valves and permitting freedom of motion of the air valves, the metering pin, and the dash pot piston 90, all previously held in a fixed position. Upon closing the throttle for idling operation, valve 98 is closed, thereby stopping the flow of fuel through the dash pot assembly and no longer permitting it

to function as a by-pass or fuel conduit. Fuel is then supplied to the mixing chamber 30 for the idling operation of the engine directly from the supply tank at the rear of the vehicle through the feed line 67, fuel connecting passage 68, passages 69, 70, 71 and 71' and is metered by the metering pin 73 through the passage 72 and then flows through passages 74, 76', 42 and 40 into the Venturi passage 38. Reservoir 51 with its piston 90 and check valve 93, then performs the primary function of a dash pot, namely, to retard a sudden opening of the air valves while permitting a quick closing, in accord with modern practice, this function being operative at all times during operation of the engine, except when the air valves are locked by the choke. At the same time, it operates synchronously to steady the metering pin, permitting a corresponding slow opening and quick return, and preventing erratic or sudden movements of the pin.

The Venturi tube formed by the passages 35 and 38 sets up an action tending to draw fuel through the fuel supply passages. This action is stepped up and increased by the cooperation of the secondary Venturi tube 26. By this arrangement a high depression is set up in the fuel passages sufficient to draw fuel from the main supply tank at the rear of the vehicle under any condition of operation or position of the vehicle while maintaining a low manifold depression. The greatest depression in the fuel feed passages is obtained in starting the motor by locking the air valves 87 closed thereby preventing any air being drawn from the air passage into the mixing chamber except that which is drawn directly into the Venturi passages 26, 35 and 38. The effective area of the air valves 87 exposed to air under atmospheric pressure is such as to balance substantially the action of the spring 95 tending to maintain the air valves closed during the idling operation of the engine and as a result a slight flow of air is permitted directly from the air passage to the mixing chamber during the idling operation. This balance of the air valves during idling makes possible a smooth pick up from the idling operation of the motor. This balance of the air valves is further assisted by the provision of the restricted passage 19 discharging air into the Venturi tube 26. On account of this balance, the air valves open readily to supply the additional quantity of air to provide a suitable mixture in the mixing chamber when the throttle valves are operated to increase the speed of the motor. The air valves are arranged to open outwardly from the nozzle formed by the Venturi tubes and, preferably, incline upwardly therefrom so as to direct the incoming air upon the discharge end of the fuel nozzle. Preferably, the air valve seats 88 are arranged, as illustrated, to project outwardly and restrict the supply of air to the mixing chamber during the initial opening of the air valves.

To speed the engine the throttle valves are opened, thus increasing the suction in the mixing chamber. As the air valves are drawn open by this increase of suction, the metering pin is moved to permit more fuel to pass in response to the increased requirements of the engine, and at the same time the piston 90 is forced to move in the reservoir 51. If the throttle movement is sufficient to move valve 98 from its seat, the dash pot assembly again begins to function as a by-pass. At the same time another function of the dash pot becomes operative. As the motion of the piston tends to compress fuel in the reservoir it acts as a ram to force fuel through the passage past valve 98. The dash pot thus functions as an accelerating reservoir, as well as a starting reservoir, but in doing so it accomplishes a new object not heretofore applicable.

In former practice an accelerator well served merely to inject a supply of fuel into the mixing chamber, to offset a sudden increase of air due to quick opening of the throttle, and thus accelerate the speed of the engine, the accelerator well being used primarily if not exclusively for purposes of acceleration of engine speeds. In the present invention, it is desirable not only to provide the usual means for acceleration of the engine, but also to accelerate the flow of fuel from the tank and thus overcome the lag due to the inertia of a relatively large body of fuel flowing through a relatively long distance from the tank to the mixing chamber. The movement of the plunger synchronously with an opening movement of the metering pin displaces fuel in the by-pass, so that the plunger operates as a suction pump as well as a ram, and increases the momentum of the fuel flow, necessary to satisfy the increased capacity of the main fuel passage due to the movement of the metering pin.

It will be noted that all of the above functions except the by-pass valve are controlled automatically and are actuated by suction or variations of suction in the mixing chamber.

Consequently, during the acceleration of the engine the volumetric increase of mixture admitted to the engine is calibrated with respect to the automatic centrifugal spark advance mechanism commonly used by present day motor cars to obtain a proper flame propagation in the cylinder at all times. The volume of air admitted to the cylinders is initially retarded and is thereafter gradually increased as the amount of fuel admitted is increased so that the volume of mixture admitted is gradually increased as the spark advances. As a result the compression in the cylinders is gradually increased as the spark advances to obtain a most efficient flame propagation at all times. The graduated rise in the volume of mixture admitted permits of a gradual rise in the mean effective pressure in the engine's combustion chambers by retarding the flame propagation of the combustible charge due to the gradual increase in compression progressively rising as the car accelerates from a low speed when the throttle is suddenly opened, thus allowing the car to accelerate smoothly with even torque.

In the normal operation of the engine the throttle valves 46 are gradually opened and as a result the air valves 87 are gradually subjected to a greater degree of suction. Consequently, an increased amount of fuel is gradually supplied to the mixing chamber due to the gradual movement of the metering pin 73. When the engine has reached a predetermined speed, the cam 110 upon the throttle valve shaft 45 actuates the arm 108 to gradually open the economizer valve 98 and thereby permit fuel to be supplied through the fuel reservoir 51 to supplement the fuel supply through the main fuel passage as controlled by the metering pin. When the engine has attained a speed corresponding to an opening of the throttle valves such as to completely open the valve 98 the

supply of fuel through the by-pass or auxiliary fuel passage is restricted and controlled by the restricting member 49 positioned in the passage 76.

The invention provides a system adapted to supply a proper and economical amount of fuel and air to the mixing chamber throughout the entire speed range of an internal combustion engine. The balance of the air valves and the cooperative relation of the metering pin, economizer valve, throttle valve, and air valves brings about a smooth operation of the system. The fuel supply line is substantially hermetically sealed and the main fuel passage is free from restrictions except that provided by the metering pin which is always open to a sufficient extent at least for the idling operation of the motor, consequently it is possible with a low manifold depression to create a high depression in the fuel supply line sufficient to draw fuel directly to the mixing chamber from the supply tank at the rear of the vehicle which is positioned considerably below the mixing chamber.

What I claim is:

1. In a fuel supply system for internal combustion engines, a casing having a mixing chamber and an air inlet passage communicating with the mixing chamber, a fuel supply source below the level of the casing, means providing a fuel passage open under all conditions of operation between the fuel supply source and the mixing chamber, means for drawing fuel through said fuel passage comprising a Venturi tube arranged to receive air from said air passage and discharge into the mixing chamber, means providing a restricted passage adapted to draw additional air into said Venturi tube, and a hydraulic dash pot actuated by engine suction adapted to create a force tending to draw fuel from said source and propel it into the mixing chamber.

2. In a carburetor for internal combustion engines, a casing having a mixing chamber and an air inlet passage communicating with the mixing chamber, a fuel nozzle having its discharge end positioned in said mixing chamber, a resiliently seated air valve adapted to be actuated by engine suction for controlling the flow of air from the air passage past the discharge end of the nozzle, a throttle valve, means for operating the throttle valve, means providing a main fuel passage and an auxiliary fuel passage to said nozzle, a restricting member movable to control the supply of fuel through the main fuel passage, operative connections between said valve and restricting member whereby movement of the former causes movement of the latter, and means controlled by the operation of the throttle valve for controlling the supply of fuel through said auxiliary fuel passage.

3. In a carburetor for internal combustion engines having a casing and means for supplying fuel to a nozzle therein, an auxiliary fuel passage to the nozzle, a valve for controlling the flow of fuel through said passage, means for operating said valve including a shaft rotatably mounted in said casing and exposed to fuel in said passage, a collar on said shaft, and means for seating said collar upon said casing.

4. In a carburetor for internal combustion engines having a mixing chamber and an air inlet passage communicating with the mixing chamber, a fuel nozzle having one end open to the air passage and its other end arranged to discharge into the mixing chamber, an air valve movable to control the flow of air directly from the air passage into the mixing chamber past the discharge end of the nozzle, means operatively connected with the air valve tending to close the same, the effective area of said valve subjected to atmospheric pressure when substantially closed being such as to balance substantially the action of said air valve closing means, means providing a fuel passage to the fuel nozzle, a movable restricting member in said fuel passage, operative connections between said restricting member and said air valve, means providing an auxiliary fuel passage to the fuel nozzle, and a control valve in the auxiliary passage operative when said restricting member has moved a predetermined amount to permit a gradually increasing fuel flow through the auxiliary passage.

5. In a carburetor for internal combustion engines having a mixing chamber and an air inlet passage communicating with the mixing chamber, a fuel nozzle having one end open to the air passage and its other end arranged to discharge into the mixing chamber, an air valve movable to control the flow of air directly from the air passage into the mixing chamber past the discharge end of the nozzle, means operatively connected with the air valve tending to close the same, the effective area of said valve subjected to atmospheric pressure when substantially closed being such as to balance substantially the action of said air valve closing means, means providing a fuel passage to the fuel nozzle, a movable restricting member in said fuel passage, operative connections between said restricting member and said air valve, means providing an auxiliary fuel passage to the fuel nozzle, a control valve in the auxiliary passage operative when said restricting member has moved a predetermined amount to permit a gradually increasing fuel flow through the auxiliary passage and a restriction in the auxiliary passage for controlling the fuel flow when the control valve has opened a predeterminted amount.

6. In a carburetor forming part of a fuel system for internal combustion engines having a rotatable shaft and a mounting therefor, said shaft extending into a fuel passage, the combination therewith of a collar on said shaft, and means for seating the collar on the mounting so as to prevent escape of fuel from said passage.

7. A fuel system for internal combustion engines comprising a fuel tank, means providing a mixing chamber attachable to the intake manifold of the engine and normally above the level of fuel in the tank, means providing an air passage into the mixing chamber, an air valve for controlling said passage adapted to be actuated by suction in said chamber, a continuous conduit from the tank to said air passage, means rendered operative by suction in the mixing chamber for inducing a continuous uninterrupted flow of fuel through said conduit at all times and under all conditions during operation of the engine, a restricting member movable in said conduit for controlling the flow of fuel therethrough, a dash pot communicating with said conduit, a valve controlled plunger in said dash pot, and operative connections between said air valve, plunger and restricting member.

8. A fuel system for internal combustion engines comprising a fuel tank, means providing a mixing chamber attachable to the intake manifold of the engine and normally above the level of fuel in the tank, means providing an air passage into the mixing chamber, an air valve

for controlling said passage adapted to be actuated by suction in said chamber, a continuous conduit from the tank to said air passage, means rendered operative by suction in the mixing chamber for inducing a continuous uninterrupted flow of fuel through said conduit at all times and under all conditions during operation of the engine, a restricting member movable in said conduit for controlling the flow of fuel therethrough, a by-pass communicating with the conduit between the tank and the restricting member and subjected to said suction and adapted to supply fuel to the mixing chamber, said by-pass including a dash pot, a valve controlled plunger movable in said dash pot to supply fuel to said mixing chamber, and operative connections between said air valve, restricting member and plunger.

9. A fuel system for internal combustion engines comprising a fuel tank, means providing a mixing chamber attachable to the intake manifold of the engine and normally above the level of fuel in the tank, means providing an air passage into the mixing chamber, an air valve for controlling said passage adapted to be actuated by suction in said chamber, a continuous conduit from the tank to said passage, means rendered operative by suction in the mixing chamber for inducing a continuous uninterrupted flow of fuel through said conduit at all times and under all conditions during operation of the engine, a restricting member movable in said conduit for regulating the flow of fuel therethrough, a by-pass communicating with the conduit between the tank and restricting member subjected to said suction and adapted to supply fuel to the mixing chamber, means for controlling the flow of fuel through said by-pass, said by-pass including a dash pot having an inlet communicating with said conduit and an outlet communicating with said mixing chamber, a valve controlled plunger movable in said dash pot to supply fuel to said mixing chamber, and operative connections between said air valve, restricting member and plunger.

10. A fuel system for internal combustion engines comprising a fuel tank, means providing a mixing chamber attachable to the intake manifold of the engine and normally above the level of fuel in the tank, means providing an air passage into the mixing chamber, a continuous conduit from the tank to said air passage, means rendered operative by suction in the mixing chamber for inducing a continuous uninterrupted flow of fuel through said conduit at all times and under all conditions during operation of the engine, means actuated by said suction for regulating the flow of fuel through said conduit, a by-pass communicating with the conduit between the tank and regulating means subjected to said suction and adapted to supply fuel to the mixing chamber, means for controlling the flow of fuel through said by-pass, said by-pass including a dash pot between said conduit and by-pass control means having an inlet at its top and an outlet at its bottom, said outlet and inlet having communication respectively with said mixing chamber and conduit, and a valve controlled plunger movable in said dash pot by said suction to supply fuel to said mixing chamber:.

11. A fuel system for internal combustion engines comprising a fuel tank, means providing an air passage adapted to communicate with the intake manifold of the engine and normally above the level of fuel in the tank, an air valve for controlling said passage adapted to be actuated by suction in said passage, a continuous conduit from the tank to said air passage, means rendered operative by suction in the air passage for inducing a continuous uninterrupted flow of fuel through said conduit at all times and under all conditions during operation of the engine, a restricting member movable in said conduit for controlling the flow of fuel therethrough, a dash pot communicating with said conduit, a valve controlled plunger in said dash pot, operative connections between said air valve, plunger and restricting member, and a valve controlled fuel passage for supplying fuel from said dash pot to said air passage.

12. In a fuel system for internal combustion engines, in combination, an air passage adapted to communicate with the engine manifold, an air valve movable by engine suction to control the admission of air to said air passage, a fuel supply tank, a continuous fuel supply conduit adapted to supply fuel from said tank to said air passage including a venturi open to the atmosphere and discharging into said air passage between said air valve and the engine manifold whereby the depression in said air passage draws air through said venturi to create a depression in said conduit sufficient to draw fuel from said tank to said air passage, means for varying the flow of fuel through said conduit to said air passage including a tapered member movable in said conduit, operative connections between said air valve and said member whereby movement of the former controls movement of the latter to control the flow of fuel through said conduit into said air passage, resilient means tending to close the air valve, a throttle valve in said air passage between said air valve and the engine manifold, means providing a dash pot adapted to be supplied with fuel from said conduit, a piston movable in said dash pot, operative connections between said air valve and piston, said piston having a passage providing communication between the portions of the dash pot separated by said piston, and a valve carried by said piston adapted to close the passage therein when said air valve is opened suddenly.

13. In a fuel supply system for internal combustion engines, in combination, an air passage adapted to communicate with the engine manifold, an air valve movable by engine suction to control the admission of air to said air passage, a fuel supply tank, a continuous fuel supply conduit adapted to supply fuel from said tank to said air passage including a venturi open to the atmosphere and discharging into said air passage between said air valve and the engine manifold whereby the depression in said air passage draws air through said venturi to create a depression in said conduit sufficient to draw fuel from said tank to said air passage, means for varying the flow of fuel through said conduit to said air passage including a tapered member movable in said conduit, operative connections between said air valve and said member whereby movement of the former controls movement of the latter to control the flow of fuel through said conduit into said air passage, means providing a dash pot adapted to be supplied with fuel from said conduit, a piston movable in said dash pot, operative connections between said air valve and piston, means providing an auxiliary fuel passage extending between said dash pot and air passage, a valve closing said

auxiliary fuel passage, and means operatively associated with the throttle valve to move said valve to open said auxiliary fuel passage when said throttle valve has been opened beyond a position corresponding to a predetermined high speed of the engine.

14. In a fuel supply system for internal combustion engines, in combination, an air passage adapted to communicate with the engine manifold, an air valve movable by engine suction to control the admission of air to said air passage, a fuel supply tank, a continuous fuel supply conduit adapted to supply fuel from said tank to said air passage including a venturi open to the atmosphere and discharging into said air passage between said air valve and the engine manifold whereby the depression in said air passage draws air through said venturi to create a depression in said conduit sufficient to draw fuel from said tank to said air passage, means for varying the flow of fuel through said conduit to said air passage including a tapered member movable in said conduit, operative connections between said air valve and said member whereby movement of the former controls movement of the latter to control the flow of fuel through said conduit into said air passage, resilient means tending to close the air valve, a throttle valve in said air passage between said air valve and the engine manifold, means providing a fuel passage communicating with said conduit between said tank and movable member and adapted to by-pass fuel to said air passage, a valve closing said by-pass fuel passage, and means operatively associated with the throttle valve to move said valve to open said fuel passage when said throttle valve has been opened beyond a position corresponding to a predetermined high speed of the engine.

15. In a fuel supply system for internal combustion engines, in combination, an air passage communicating with the engine manifold, a fuel supply tank, a continuous fuel supply conduit adapted to supply fuel from said tank to said air passage including a venturi open to the atmosphere and discharging into said air passage whereby the depression in said air passage draws air through said venturi to create a depression in said conduit sufficient to draw fuel from said tank to said air passage, means for varying the flow of fuel through said conduit to said air passage including a tapered member movable in said conduit, a gate valve in said air passage adapted to move open by engine suction away from said venturi and control the flow of air past the discharge end of the venturi, resilient means tending to close the air valve, a throttle valve in said air passage between said gate valve and the engine manifold, operative connections between said gate valve and said tapered member whereby movement of the former controls movement of the latter to control the flow of fuel through said conduit to said air passage, means providing a fuel passage communicating with said conduit between said tank and movable member and adapted to by-pass fuel to said air passage, a valve closing said by-pass fuel passage, and means operatively associated with the throttle valve to move said valve to open said by-pass fuel passage when said throttle valve has been opened beyond a position corresponding to a predetermined high speed of the engine.

OTIS C. FUNDERBURK.