(No Model.)

L. J. YARNELL & J. H. SCHMIDT.

CAR COUPLING.

No. 590,352. Patented Sept. 21, 1897.

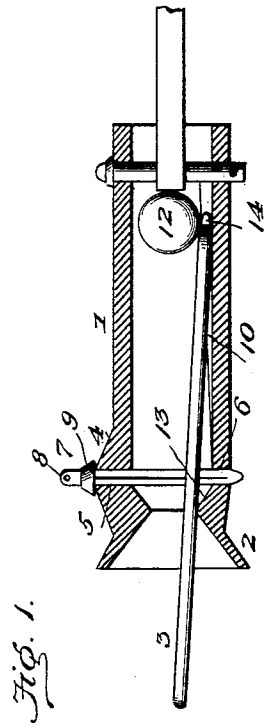

Fig. 1.

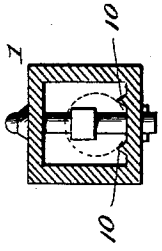

Fig. 2.



Fig. 4.

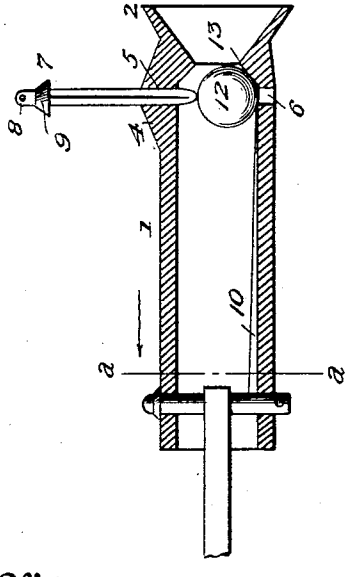

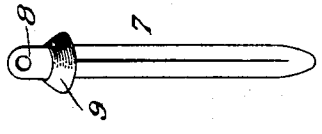

Fig. 5.

Witnesses
W. E. Gaskill
A. D. Smith

Inventors
Leon Joseph Yarnell,
Joseph Henry Schmidt.
By A. B. Wilson
Attorney

THE NORRIS PETERS CO., PHOTO-LITHO., WASHINGTON, D. C.

UNITED STATES PATENT OFFICE.

LEON J. YARNELL AND JOSEPH H. SCHMIDT, OF DEEPWATER, TEXAS.

CAR-COUPLING.

SPECIFICATION forming part of Letters Patent No. 590,352, dated September 21, 1897.

Application filed March 1, 1897. Serial No. 625,590. (No model.)

To all whom it may concern:

Be it known that we, LEON J. YARNELL and JOSEPH H. SCHMIDT, citizens of the United States, residing at Deepwater, in the county of Harris and State of Texas, have invented certain new and useful Improvements in Automatic Car-Couplings; and we do declare the following to be a full, clear, and exact description of the invention, such as will enable others skilled in the art to which it appertains to make and use the same.

Our invention has relation to automatic car-couplings; and the object is to provide a simple, reliable, and effective device of this kind; and to this end the novelty consists in the construction, combination, and arrangement of the same, as will be hereinafter more fully described, and particularly pointed out in the claim.

In the accompanying drawings the same reference-characters indicate the same parts of the invention.

Figure 1 is a longitudinal section of our improved automatic car-coupling. Fig. 2 is a vertical section of one of the draw-heads on the line *a a* of Fig. 1. Fig. 3 is a perspective view of the coupling-pin detached from the draw-head, and Fig. 4 is a similar view of the coupling-link.

1 represents the approximately rectangular draw-head, formed with flaring jaws 2 2 to facilitate the entry of the link 3.

4 represents an integral enlarged boss on the top face of the draw-head, through which extends a square vertical orifice 5, below which is a similar alined orifice 6 in the bottom of the draw-head.

7 represents the rectangular coupling-pin, formed with a head or handle 8 and a horizontal flange 9, said pin being adapted to engage the vertical alined orifices in the draw-head and secure the link in place. The inner upper face of the bottom of the draw-head is provided with two parallel V-shaped rails 10 10, which are slightly inclined forward and downward from their rear ends to the front end of the draw-head.

12 represents a loose ball or sphere rolling on said forwardly-inclined rails 10 10, and when normally at rest is adapted to come in contact with the transverse shoulder 13 on the bottom of the draw-head and remain stationary in line with the vertical orifices 5 and 6 and form a support for the coupling-pin 7, so that when the link 3 is inserted it forces the ball 12 backward and allows the pin to drop through the link and into the orifice 6 and secure the link in place in said draw-head.

When the pin 7 is raised to uncouple the cars and the link removed, the ball 12 rolls down the V-shaped rails 10 10 and comes to rest under the pin, which is then allowed to drop on the ball, which supports it in the elevated position shown on the left of Fig. 1.

The link 3 is provided at one end with a longitudinally-projecting bevel-edged toe 14, and when said link is inserted in the draw-head for the purpose of coupling with another car, as shown on the right of Fig. 1, the link pushes the ball 12 backward, its toe 14 supporting the ball, while its forward end rests on top of the shoulder 13, so as to support the link in a horizontal position, with its projecting end in position to enter the draw-head on the opposite car and automatically couple the same when the cars come together.

Although we have specifically described the construction and relative arrangement of the several elements of our invention we do not desire to be confined to the same, as such changes or modifications may be made as clearly fall within the scope of our invention without departing from the spirit thereof.

Having thus fully described our invention, what we claim, and desire to secure by Letters Patent, is—

A car-coupling comprising the draw-head 1, provided with the integral boss 4 having the vertical rectangular orifice 5, an alined orifice 6, a contiguous transverse shoulder 13, and the parallel forwardly-inclined rails 10 10 in the bottom of said draw-head, in combination with the rectangular coupling-pin 7, and the link 3 provided with the forwardly-projecting bevel-edged toe 14, substantially as shown and described.

In testimony whereof we hereunto affix our signatures in presence of two witnesses.

LEON J. YARNELL.
JOSEPH H. SCHMIDT.

Witnesses:
S. A. BRADLEY,
HENRY SCHMITT.