June 24, 1941. W. F. OHME 2,246,692

BAG RACK

Filed Aug. 16, 1937 2 Sheets-Sheet 1

Fig. 1

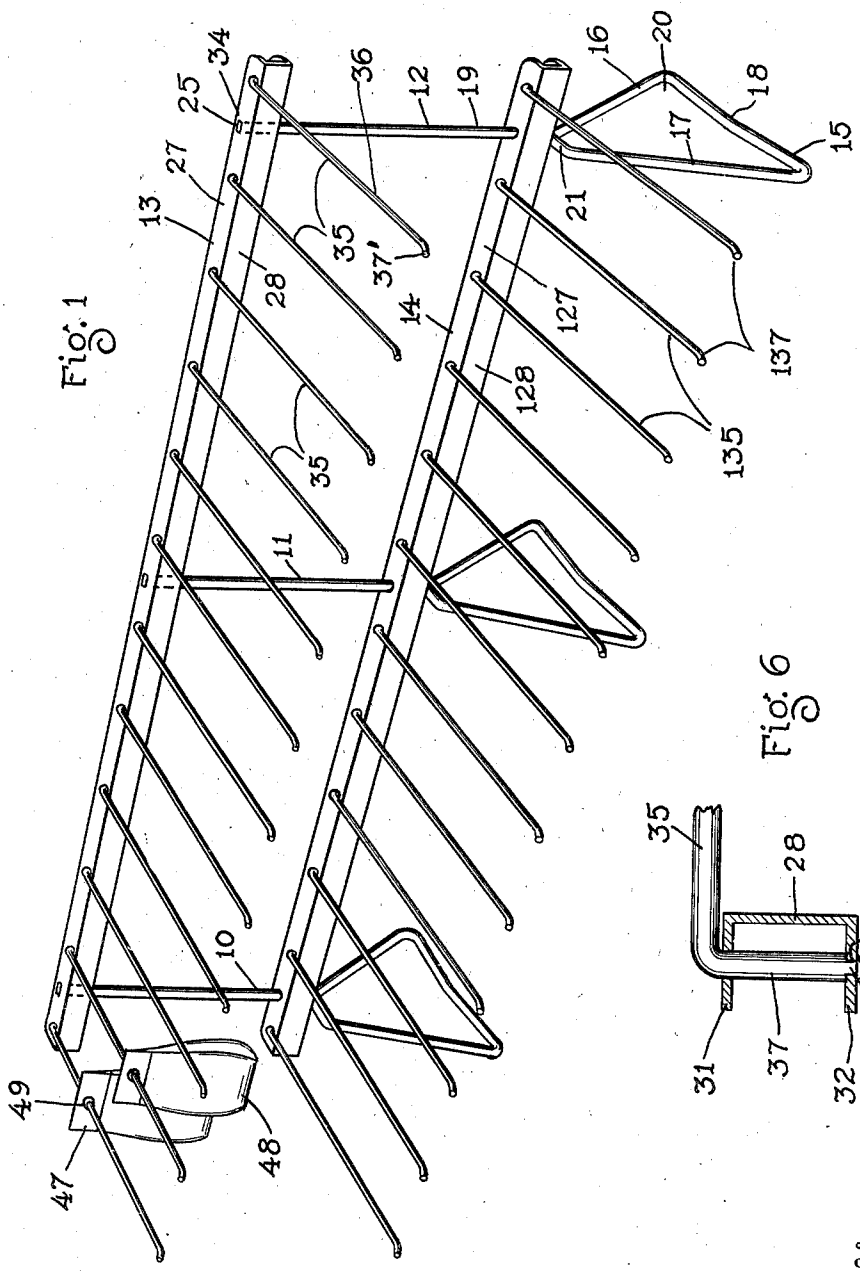


Fig. 6




Inventor

Walter F. Ohme

By Caswell & Lagaard

Attorney

June 24, 1941. W. F. OHME 2,246,692

BAG RACK

Filed Aug. 16, 1937 2 Sheets-Sheet 2

Fig. 2

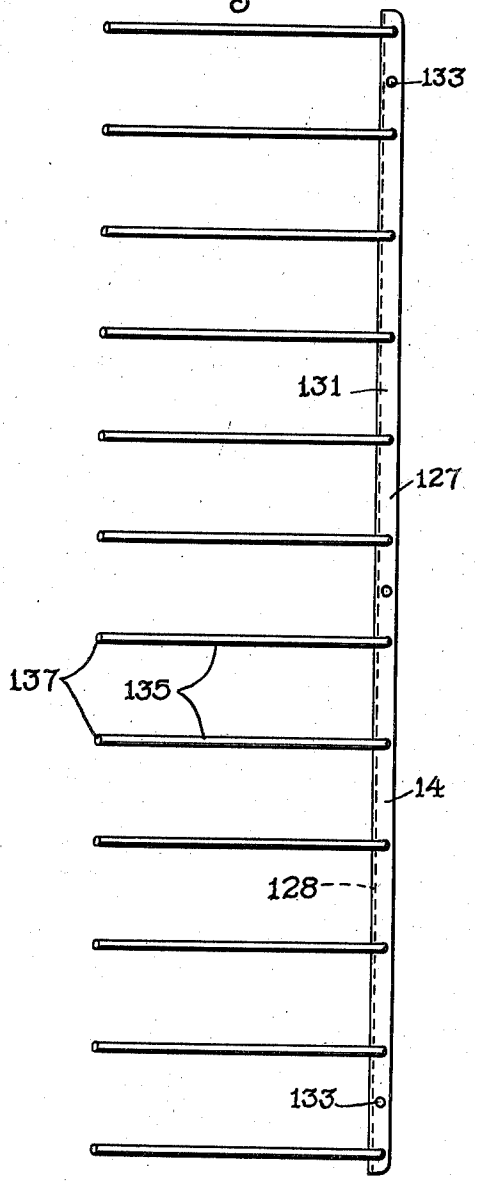


Fig. 3

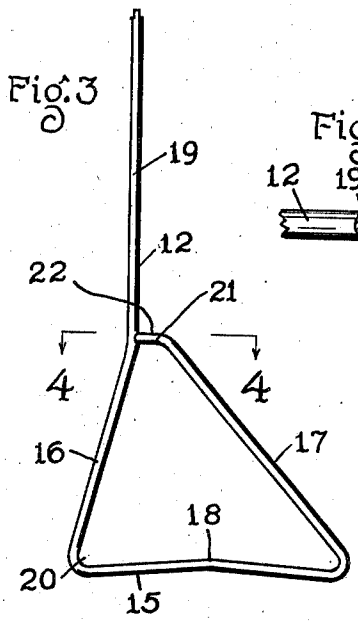


Fig. 4

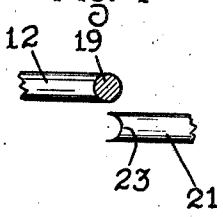


Fig. 5

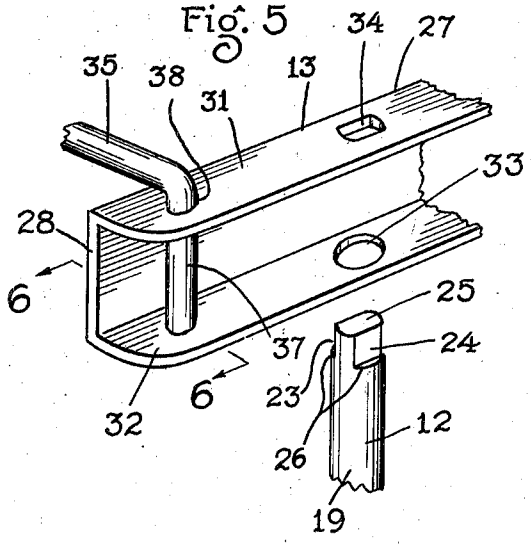


Inventor

Walter F. Ohme

By Caswell & Lagaard

Attorney

Patented June 24, 1941 2,246,692

# UNITED STATES PATENT OFFICE

2,246,692

## BAG RACK

Walter F. Ohme, Minneapolis, Minn.

Application August 16, 1937, Serial No. 159,357

6 Claims. (Cl. 211—59)

My invention relates to bag racks and has for an object to provide an extremely simple and practical construction for supporting bags such as candy and nut bags whereby the same may be readily available for inspection and dispensing.

Another object of the invention resides in providing a bag rack which may be constructed at a nominal cost and from ready available materials.

A feature of the invention resides in providing a bag rack that may be constructed from wire and sheet metal.

An object of the invention resides in providing a bag rack which may receive and support a great number of bags and which, at the same time, is sturdy in construction and stable.

Another object of the invention resides in constructing the bag rack with a number of standards to which a plurality of cross bars are attached and from which issue supporting arms upon which the bags may be hung.

Another object of the invention resides in constructing the standards and arms of wire and the cross bars of sheet metal, channel shaped in cross section.

Another feature of the invention resides in providing simple and inexpensive supporting means whereby the arms and standards may be held from rotation with reference to the cross bars and from which the cross bars are supported at spaced elevation with reference to the standards.

Another object of the invention resides in providing a readily collapsible bag rack.

With the foregoing and other objects in view, which will appear in the following description, the invention resides in the novel combination and arrangement of parts and in the details of construction hereinafter illustrated and/or described.

In the drawings:

Fig. 1 is a perspective view of a bag rack illustrating an embodiment of my invention.

Fig. 2 is a plan view of one of the rack sections removed from the supporting standards.

Fig. 3 is an elevational view of one of the standards.

Fig. 4 is a detailed sectional view taken on line 4—4 of Fig. 3 and showing the parts disconnected from one another.

Fig. 5 is a detailed perspective view of the end of the upper cross bar and associated structures showing the manner of connecting the various parts thereto.

Fig. 6 is a vertical cross sectional view taken on line 6—6 of Fig. 5.

My invention, as shown in the drawings, comprises three standards or supports 10, 11 and 12 which support two rack sections 13 and 14. These various parts will now be described in detail.

The standards 10, 11 and 12 are identical in construction and only the standard 10, which is shown in Fig. 3, will be described in detail. This standard is constructed from round wire which is bent to form base 20. The base 20 consists of a foot 15 and two legs 16 and 17 issuing upwardly therefrom. The foot 15 is humped at the middle as designated at 18 to cause the said foot to set squarely on the table or other support on which the standards rest. The two legs 16 and 17 converge toward their upper ends. Issuing upwardly from the leg 16 is an upright 19 which is of the proper height to support the rack section 13 in proper elevation above the rack section 14. At the upper end of leg 17 the same is constructed with a bent portion 21 which extends toward the upright 19 and is formed with a horizontal upper surface 22 forming a rest or a shoulder on which the rack section 14 is supported. The extreme end of the portion 21 is constructed with an arcuate notch 23 shown in detail in Figure 4 which fits against the upright 19. The legs 16 and 17 are normally bent beyond their final positions so that the notch 23 is urged into engagement with the upright 19 through the spring action of the base 20. At the upper end of the upright 19 the standard 12 is cut away as indicated at 23 and 24 to form a non-circular portion 25 having upwardly facing shoulders 26.

The rack section 13 consists of a cross bar 27 U shaped or channel shaped in cross section which is constructed with a web 28 and upper and lower flanges 31 and 32 issuing outwardly therefrom. When the parts are arranged in operating position the two flanges 31 and 32 lie horizontally. At suitable localities in the flange 32 are formed circular holes 33 which receive the uprights 19 of standards 10, 11 and 12. Superimposing the holes 33 and in the flange 31 are other holes 34 which correspond in configuration to the portions 25 of the uprights 19. The portions 25 are received in these holes and the flange 31 rests on the shoulders 26 whereby the cross bar 13 is held in position at the upper portion of the standards. By constructing the holes 34 and the portions 25 non-circular rotation of the

standards with reference to the rack section 13 is prevented.

The rack section 13 includes a number of arms 35 which are identical in construction and which project outwardly therefrom and form supports for the bags to be carried by the rack. These arms are constructed from wire and each have an elongated substantially horizontally positioned body portion 36, an upturned tip 37' at its outer free end and a depending substantially vertically extended shank 37 at its attached end. These shanks extend through the flanges 31 and 32 of the cross bar 27 in much the same manner as the uprights 19 of standards 10, 11 and 12. The upper-most portions of these shanks are received in circular holes 38 in the flange 27 while the lower ends of said shanks are constructed with non-circular portions 39 which are received in non-circular openings 41 formed in the lower flange 32 of the cross bar 27. The portions 39 are slightly longer than the thickness of the material through which they extend and are riveted over as shown in 42 in Fig. 6. By means of this construction the arms 35 are securely attached to the cross bar 27 and are held from rotation with respect to the same.

The rack section 14 is constructed identical with rack section 13 excepting that the upper openings in the flange 31 thereof for the reception of uprights 19 are circular so that the cross bar 27 of this rack section slides down upon the upright 19 and rests upon the surface 22 of the portion 21 forming the seat previously referred to. Since the construction of this rack section is otherwise identical with section 13 the description thereof will not be repeated and similar reference numeral preceded by the digit 1 will be used to indicate corresponding parts.

The use of the invention is as follows:

The rack sections are normally detached from the standards and the parts easily pack in a small box or in an envelope. When desired for use the uprights 19 of the standards are threaded through the circular holes of the cross bar 127 of rack section 14 and the cross bar slid along these uprights until the same becomes seated on the rests 22. These parts are then self-supporting. Rack section 13 is next applied in a similar manner and the standards 10, 11 and 12 rotated until the non-circular portions 25 of the uprights 19 are received within the non-circular holes 34. As soon as the flanges 31 rest upon the shoulders 26 the parts are properly assembled. The rack is now placed upon the table, counter or other support on which same is to remain and bags of merchandise, such as candy, nuts, etc., are hooked on the various arms 35. In Fig. 1 I have shown two such bags indicated at 47 and 48 which are constructed with eyes or openings 49 near the upper-most margins thereof. These bags are applied in such a manner that the arms 35 are received in the eyes or openings 49. The bags are then slid along said arms until the same reach the cross bars of the rack sections. The rack may thus be completely filled with bags.

By means of the invention a great number of bags may be supported on a relatively small light and inexpensive rack and are readily accessible for dispensing or otherwise.

Although I have specified my bag holder to be particularly adapted for supporting bags, it readily can be comprehended that the device may be used for any other article which can be hung on the arms provided.

In the drawings, I have shown the rack as constructed with two rack sections and with three standards. It can readily be comprehended that any number of standards in excess of one may be used and that the rack may also be constructed with only one rack section. Also the supporting arms may be extended in either or both directions if desired.

The advantages of my invention are manifest. An extremely inexpensive and simple construction is provided whereby bags may be readily and conveniently displayed. The parts of my invention are collapsible and may be packed for shipment in a flat and compact state. My improved bag holder will support an exceedingly great number of articles. The parts are readily erected when the device is desired for use. By means of the particular construction shown, both the standards and supporting arms can be constructed of wire and rigidly attached to the associated parts.

Changes in the specific form of my invention, as herein disclosed, may be made within the scope of what is claimed without departing from the spirit of my invention.

Having described my invention, what I claim as new and desire to protect by Letters Patent is:

1. A bag rack comprising a plurality of standards each constructed from wire and bent to form a triangular base having a foot and legs extending upwardly therefrom in converging relation, an upright extending upwardly from one of said legs and bag supporting means carried by said uprights.

2. A bag rack comprising a plurality of standards each constructed from wire and bent to form a triangular base having a foot and legs extending upwardly therefrom in converging relation, an upright extending upwardly from one of said legs, the other of said legs having its end bent toward the first named leg and upright to form a shoulder, and bag supporting means attached to said uprights and resting upon said shoulders.

3. A bag rack comprising a plurality of standards each constructed with a base and an upright connected thereto, said standards each being provided at a locality above said base with an upwardly facing shoulder projecting outwardly from said upright and bag supporting means attached to said uprights and resting upon said shoulders.

4. A bag rack comprising a plurality of standards each constructed of round wire bent to form a triangular base having a foot and legs extending upwardly therefrom in converging relation, an upright issuing upwardly from one of said legs, a finger extending from the other of said legs toward said upright said finger forming a rest and having a notched end adapted to engage said upright for holding the legs of said base in proper relation and bag supporting means carried by said uprights and seated on said rests.

5. A bag rack comprising a plurality of standards each having a base and a cylindrical upright extending upwardly therefrom, rests formed on said standards intermediate the heights thereof, a cross bar having circular holes receiving said uprights said cross bar being seated on said rests, noncircular portions formed at the upper ends of said uprights and providing shoulders, a second cross bar having circular holes to receive said uprights and being

provided with non-circular holes engaging the non-circular portions of said uprights and holding said standards from rotation relative to said cross bars and bag supporting means attached to said cross bars.

6. A bag rack comprising a plurality of standards constructed of cylindrical wire each provided with a base portion having a foot and legs bent therefrom and converging toward one another, an upright issuing upwardly from one of said legs, the end of the other of said legs being bent toward the upright to form a rest, a cross bar having cylindrical holes therein for the reception of said uprights said cross bar being seated upon said rests, the upper ends of said uprights being constructed with non-circular portions, a second cross bar having circular holes to receive said uprights and being formed with non-circular holes adapted to engage the non-circular portions of said uprights and to hold the same from rotation, the portions of said second cross bar adjacent the non-circular holes of the cross bar being seated upon said shoulders and bag supporting means carried by said cross bars.

WALTER F. OHME.