United States Patent [19]

Kester

[11] **3,865,234**

[45] **Feb. 11, 1975**

[54] **DISPLAY AND CARRYING PACKAGE FOR FLAT, FLEXIBLE MERCHANDISE**

[75] Inventor: **Melvin E. Kester**, Concord, N.C.

[73] Assignee: **Canon Mills Co.**, Kannapolis, N.C.

[22] Filed: **Jan. 17, 1973**

[21] Appl. No.: **324,415**

[52] **U.S. Cl.** **206/45.33,** 206/459, 206/492

[51] **Int. Cl.** **B65d 65/16,** B65d 77/24

[58] **Field of Search** ..... 206/45.33, 46 AP, 281, 206/459, 492

[56] **References Cited**

UNITED STATES PATENTS

2,131,699	9/1938	O'Neill et al.	206/45.33
2,732,937	1/1956	Braun	206/45.33 X
2,771,986	11/1956	Bekoff	206/45.29 X
2,773,340	12/1956	McCarthy	206/46 AP X
3,104,759	9/1963	Hansen	206/78 B
3,302,777	2/1967	Sparks	206/78 B

FOREIGN PATENTS OR APPLICATIONS

285,296	2/1928	Great Britain	206/281
339,174	8/1959	Switzerland	206/281
535,701	1/1957	Canada	206/492

Primary Examiner—Leonard Summer
Attorney, Agent, or Firm—Parrott, Bell, Seltzer, Park & Gibson

[57] **ABSTRACT**

A display carrying package for flat, flexible merchandise, such as bed sheets and the like, characterized by fold-open construction which affords greater area for display of the merchandise and advertising material associated therewith while providing a conventional size package for shelf storage in the folded condition. This package includes a stiffener of flat, stiff, sheet material conforming generally with the dimensions of the package and having at least one scored fold line thereacross for insertion of the stiffener within the merchandise and for folding the merchandise about the fold line on itself for storage on the shelf in a conventional size package and for unfolding the package for display thereof while maintaining the package of merchandise relatively stiff for easy handling. The package further includes a closed transparent bag for receiving therewithin and enclosing the merchandise with the stiffener therein to form an enclosed package and for receiving advertising material therein.

1 Claim, 7 Drawing Figures

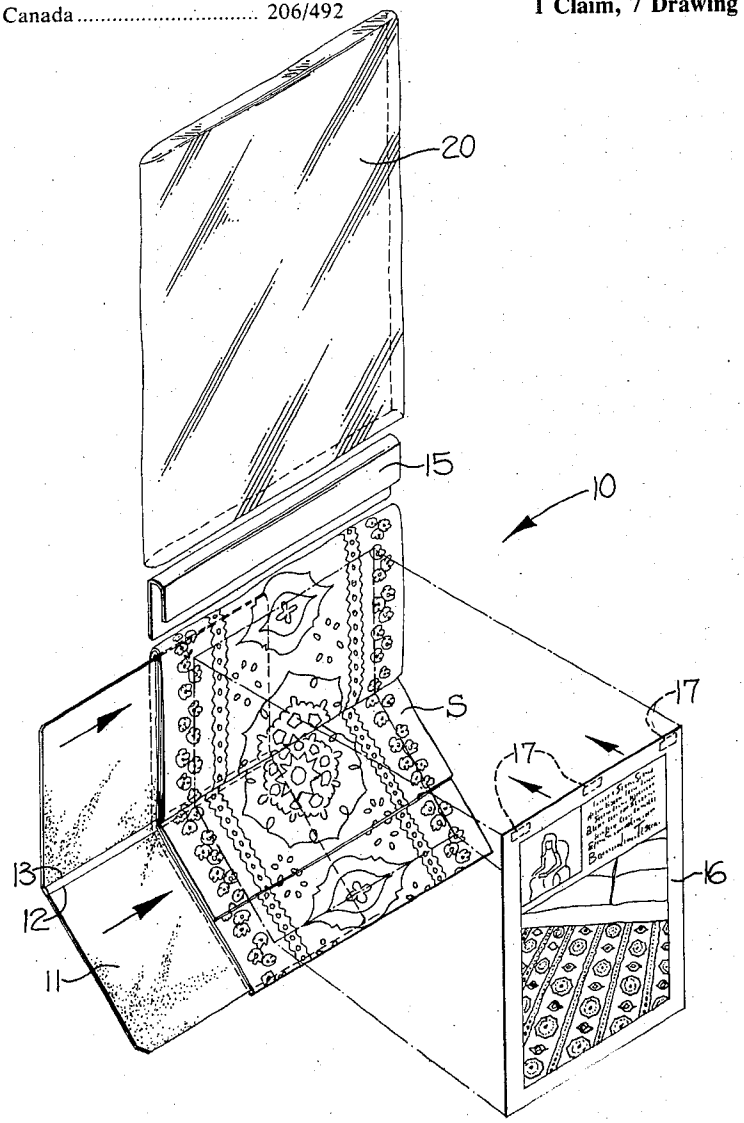

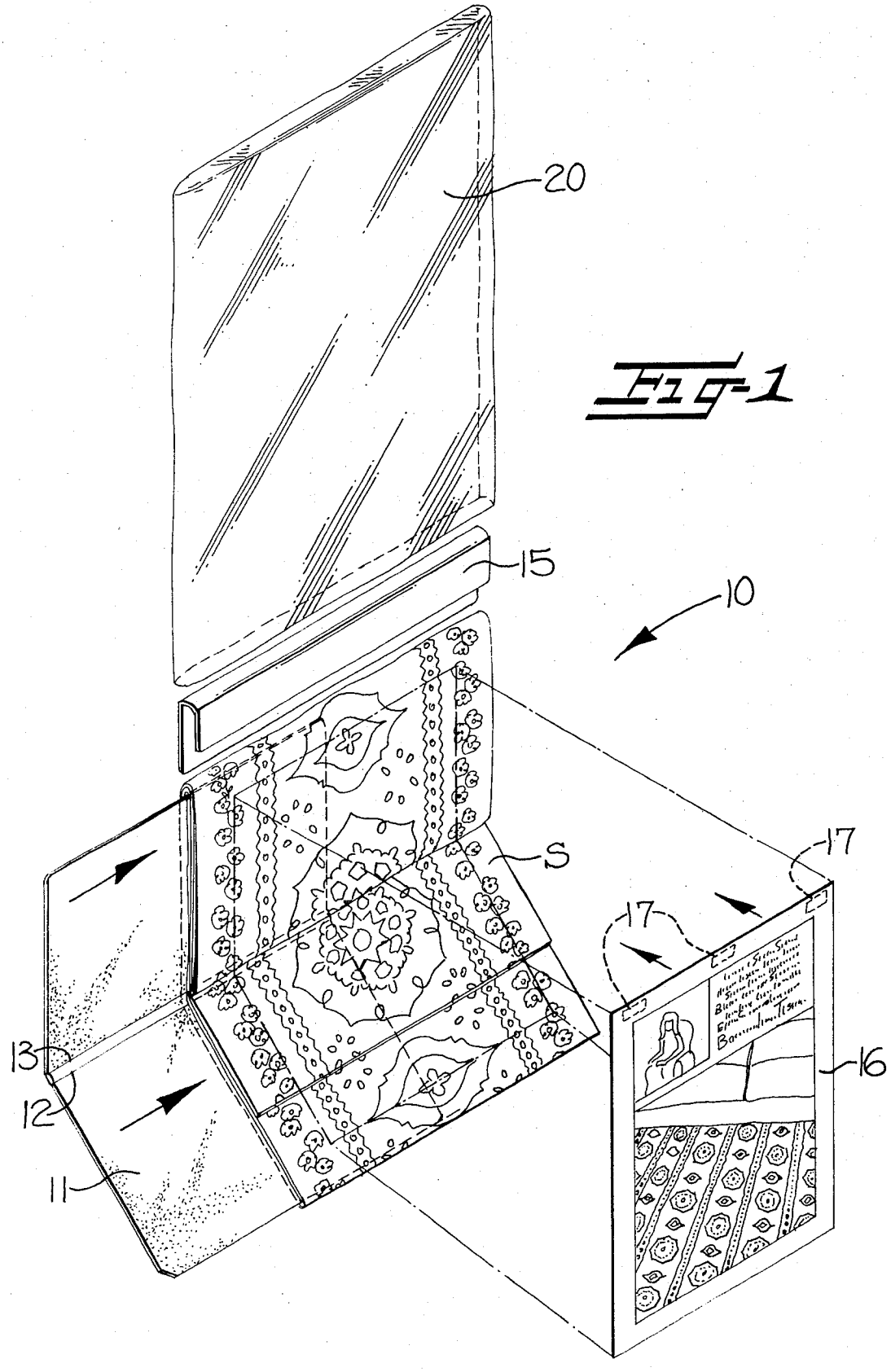

Fig-1

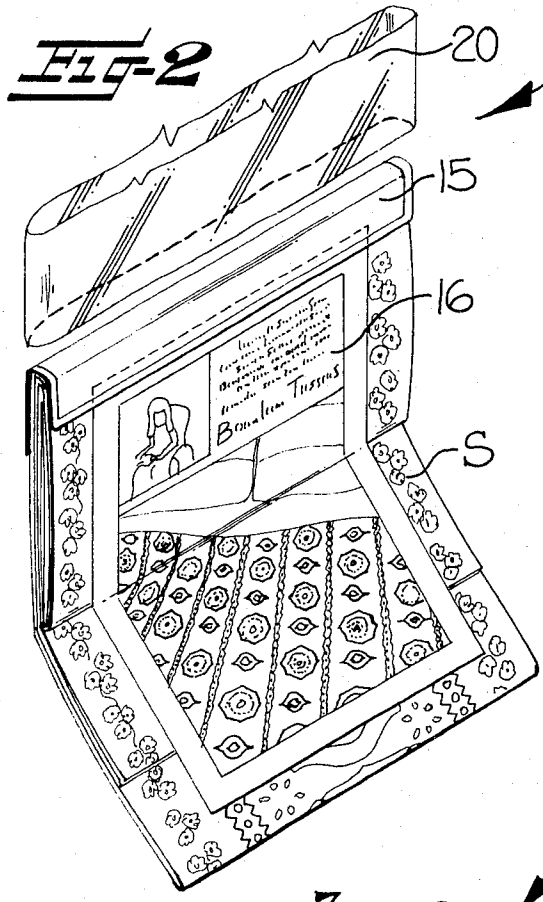

Fig-2

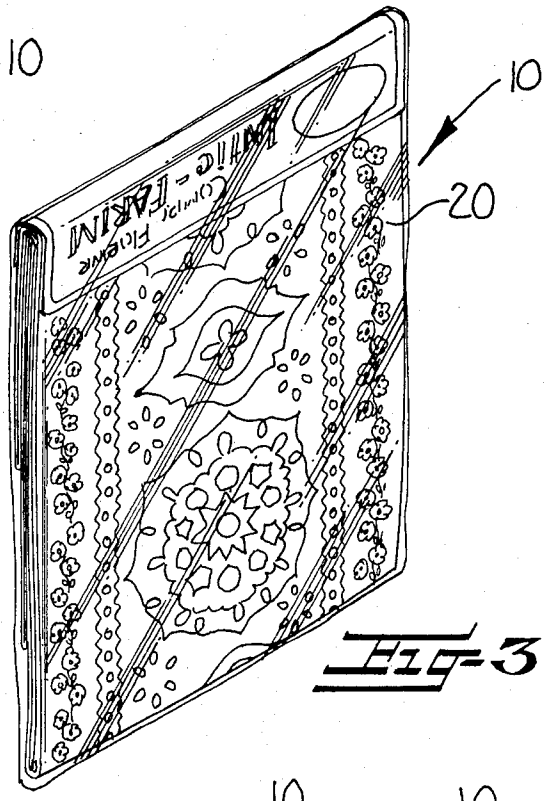

Fig-3

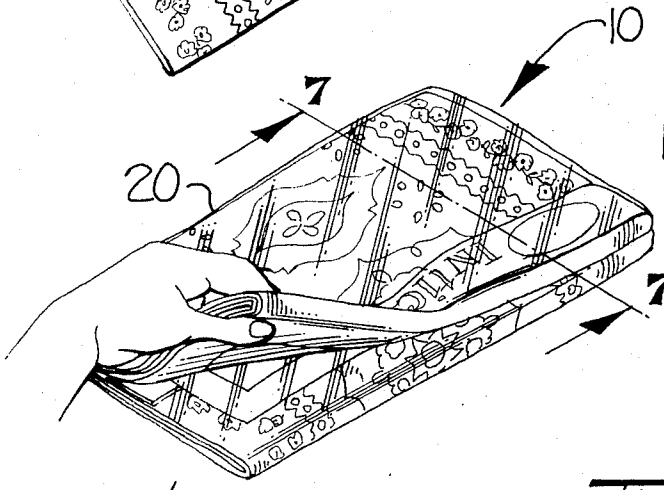

Fig-4

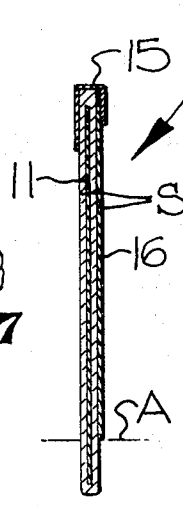

Fig-5

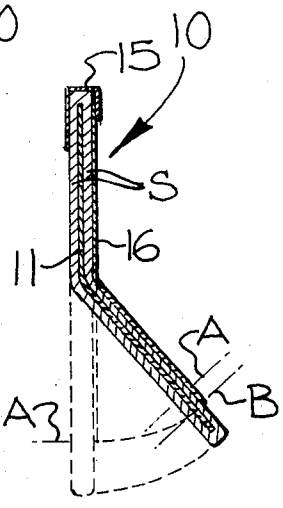

Fig-6

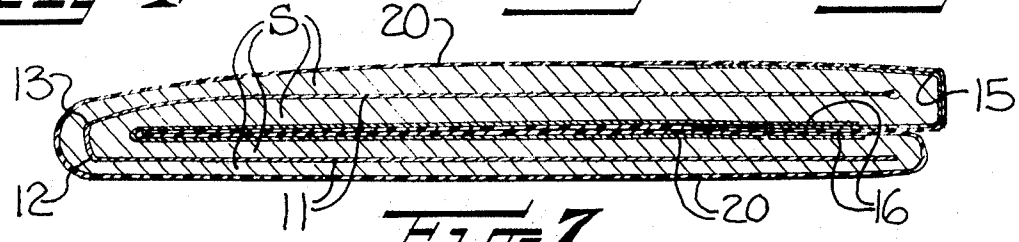

Fig-7

DISPLAY AND CARRYING PACKAGE FOR FLAT, FLEXIBLE MERCHANDISE

This invention relates to a display and carrying package for flat, flexible merchandise, such as bed sheets and the like, characterized by a fold-open construction which affords greater area for display of the merchandise and advertising material therewith while providing a conventional size package for shelf storage in the folded condition.

In the merchandising of flat, flexible products, particularly bed sheets and the like, the retail outlets normally require a standard size package for stacking and placing of the bed sheets on the shelves in the retail stores. Accordingly, the manufacturers are required to package these products in conventional, standard size packages. The conventional, standard size packages necessarily limit the amount of the bed sheet which is visible to the customer when examining the package of bed sheets in the retail outlet and limits the amount of advertising material in the form of inserts or otherwise which can be placed in the package.

Accordingly, it is the object of the present invention to provide an improved package for flexible, flat merchandise, such as bed sheets or the like, which will expose more of the product for view by the potential purchaser and which will allow the use of larger advertising inserts, while maintaining a conventional and standard size package for shelf storage.

It has been found by this invention that the above object may be accomplished by providing a display and carrying package characterized by a fold-open construction which affords greater area for display of the merchandise and advertising material associated therewith while providing a conventional size package for shelf storage in the folded condition. The package comprises stiffener means comprising a flat, stiff sheet of material conforming generally with the dimensions of the package and having at least one scored fold line thereacross for insertion of stiffener means within the merchandise and for folding the package about the fold line on itself for storage on the shelf in a conventional size package and for unfolding for display thereof while maintaining the package of merchandise relatively stiff for easy handling. The package further comprises a closed transparent bag for receiving therewithin and enclosing the merchandise with the stiffener means therein to form an enclosed package and for receiving advertising material therein. The bag means is flexible for the aforesaid folding action of the package.

Preferably, the display and carrying package further includes a folded over sleeve means for being placed on and covering one end of the merchandise within the bag means, and a flexible sheet of advertising material for being placed over one side of the merchandise within the bag means and being secured at one end thereof to one end of the sleeve means for a reciprocating action thereof within the bag means when the package is folded and unfolded to maintain the sheet of advertising material in the desired position and alignment within the bag means. Also, it is preferable to have a pair of spaced, parallel, scored fold lines on the stiffener means for ease of folding of the merchandise.

Some of the objects and advantages of this invention having been set forth, other objects and advantages will appear as the description proceeds when taken in conjunction with the accompanying drawings, in which:

FIG. 1 is a perspective, exploded view of the display and carrying package of this invention;

FIG. 2 is a perspective view of one side of the display and carrying package of this invention showing the package in substantially the unfolded condition thereof;

FIG. 3 is a perspective view of the other side of the display and carrying package of this invention in the fully unfolded condition;

FIG. 4 is a perspective view of the display and carrying package of this invention in the folded condition for shelf storage and illustrating one corner being manually unfolded by a prospective customer or the like;

FIGS. 5 and 6 are transverse sectional views of the display and carrying package of this invention illustrating the reciprocating action of the advertising insert during folding and unfolding; and

FIG. 7 is a transverse cross-sectional view, taken generally along the line 7—7 of FIG. 4.

Referring now to the drawings, the display and carrying package for bed sheets and the like of this invention is generally indicated by the reference numeral **10.**

This package **10** comprises a stiffener **11** consisting of a flat, generally rectangular, stiff sheet of suitable material, such as chipboard, cardboard or the like. The stiffener **11** includes a pair of spaced, parallel, scored fold-lines **12** and **13** extending transversely thereacross at generally the middle portion thereof for folding of the stiffener upon itself along the fold lines **12** and **13.** The stiffener is inserted centrally within a prefolded bed sheet S for allowing the prefolded bed sheet and the package **10** to fold upon itself and to unfold, while maintaining the prefolded bed sheet relatively stiff for easy handling. The spaced apart pair of fold lines facilitate folding upon itself of the prefolded bed sheet due to the thickness of the prefolded bed sheet.

The package **10** further includes a fold-over sleeve **15** for being placed on and covering one end of the prefolded bed sheet, as shown in the drawings. This fold-over sleeve may be constructed of any suitable material, such as paper coated with foil, etc., and may include printed advertising indicia on the outside thereof.

The package **10** further includes a flexible sheet of advertising material **16** for being placed on one side of the prefolded bed sheet S in the unfolded condition of the package **10** and is secured at one end thereof to one end of the sleeve **15** by any suitable means such as spaced glue spots, indicated in dotted lines in FIG. **1** at **17.**

This construction of the fold-over sleeve **15** and the sheet of advertising material **16** allows proper positioning of the advertising material on one side of the prefolded sheets during folding and unfolding of the package **10** due to the securement or anchoring of the sheet of advertising material **16** at the fold-over sleeve **15** resulting in a reciprocating action up and down of the sheet of advertising material **16** as indicated at A and B in FIGS. **5** and **6.** Thus, the sheet of advertising material **16** is always maintained in the proper position.

The package **10** further includes a closed transparent bag **20** constructed of any suitable material, such as polyethylene, for receiving therewithin and enclosing the prefolded bed sheet S with the stiffener **11** therein, the sleeve **15** and the advertising sheet **16** thereon to form an enclosed package. The bag **20** is flexible for the folding action of the package **10** and completely encloses the package for holding the components in

proper position and alignment therewithin. The bag **20** may be gusseted on the sides thereof and may be closed at the ends thereof by heat sealing or other suitable means.

Thus, it may be seen that a display and carrying package for bed sheets is provided which in the folded condition thereof, as shown in FIG. **4**, provides a conventional and standard size package of bed sheets for storage on retail counters or shelves in stacks with other packages of other manufacturers and allows the package to be folded open, as shown in FIGS. **3** and **4**, for affording a greater area for display of the bed sheets and design thereon, as shown in FIG. **3**, and the utilization and display of a larger sheet of advertising material on the other side thereof, as shown in FIG. **2**. This improved package gives sales personnel in the retail medium a selling aid at the point of sales level and affords a vehicle for improved communication with the consumer at the point of sale.

In the specification and drawings, there has been set forth a preferred embodiment of this invention and, although specific terms are employed, they are used in a generic and description sense only and not for purposes of limitation.

What is claimed is:

1. A display and carrying package for flat, flexible merchandise, such as bed sheets and the like, characterized by a fold-open construction which affords greater area for display of the merchandise and advertising material associated therewith while providing a conventional size package for shelf storage in the folded condition; said package comprising:

flat, flexible merchandise having fold-open dimensions greater than a conventionally desired, shelf size package;

a stiffener comprising a flat, stiff, sheet of material conforming generally with the fold-open dimensions of said merchandise and positioned and inserted within said merchandise in the fold-open position thereof to render said merchandise relatively stiff for easy handling, said stiffener including at least one fold line thereacross and generally centrally thereof for folding of said merchandise and said stiffener about said fold line to a folded position in which said merchandise has generally the conventionally desired, shelf size dimensions;

a closed, flexible, transparent bag disposed around and enclosing said merchandise with said stiffener means therein in the fold-open position thereof forming an enclosed transparent package for display of said merchandise in the fold-open position while folding with said package for shelf storage;

a fold-over sleeve placed around and covering one end of said merchandise; and

a flexible sheet of advertising material positioned on one side of said merchandise and secured at one end thereof to one end of said sleeve for a reciprocating action thereof when said package is folded open to maintain said sheet of advertising in the desired position and alignment.

* * * * *