C. RUOFF AND J. NITSCHMAN.

METALLIC YARN.

APPLICATION FILED NOV. 10, 1917.

1,376,730. **Patented May 3, 1921.**

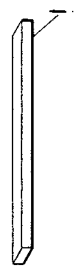

FIG. 1

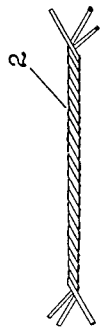

FIG. 2

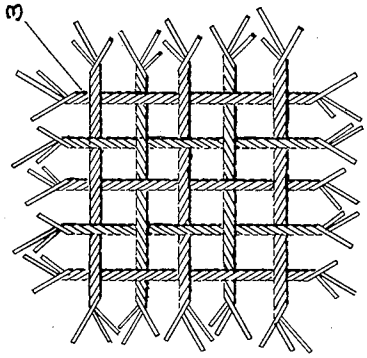

FIG. 3



FIG. 4

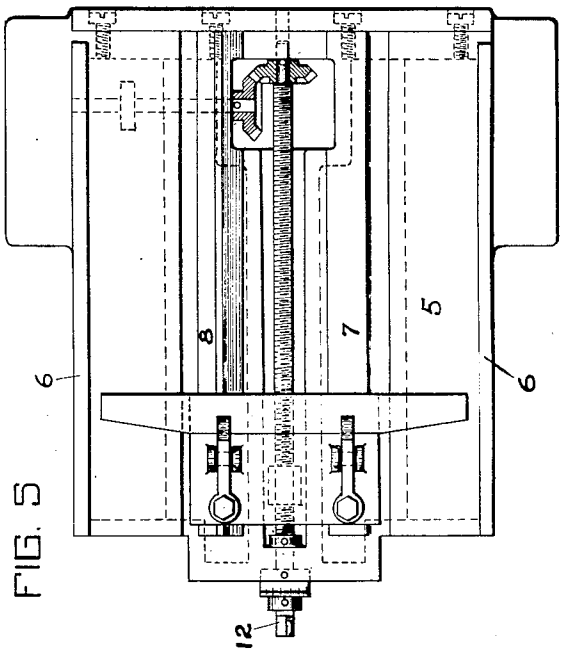

FIG. 5

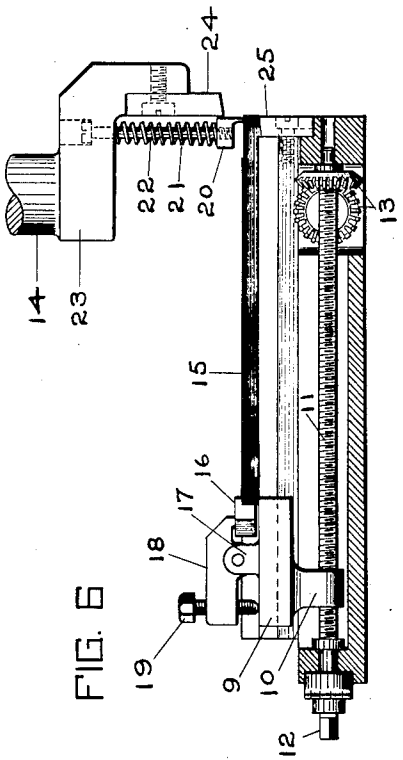

FIG. 6

WITNESSES:

Harold H. Pelzer

William E. Evers

INVENTORS

Christian Ruoff and

Joseph Nitschman

BY

[illegible]

ATTORNEY

UNITED STATES PATENT OFFICE.

CHRISTIAN RUOFF AND JOSEPH NITSCHMAN, OF NEWARK, NEW JERSEY.

METALLIC YARN.

1,376,730. Specification of Letters Patent. Patented May 3, 1921.

Application filed November 10, 1917. Serial No. 201,281.

To all whom it may concern:

Be it known that we, CHRISTIAN RUOFF and JOSEPH NITSCHMAN, both citizens of the United States of America, and both residing in the city of Newark, in the county of Essex and State of New Jersey, have invented a certain new and useful Metallic Yarn, of which the following is a specification.

The object of our invention is first, to produce filamentary strips of metal of very small cross section and of such length as to be suitable for spinning into metallic yarn; and second to produce a metallic yarn of any desired length and number of strands or gage and having the maximum strength; and suitable for weaving into a metallic fabric adapted for use as woven, or for imparting strength to other materials or compounds by being combined with or embedded therein to form blocks, sheets, rods, or other forms.

We are aware that what is commonly known as metallic or steel wool is produced from metal blocks, plates, rods or wire by various machining operations, but so far as we are aware such product is not commercially suitable for spinning into metallic yarn owing to the characteristics of the filaments produced. That is to say, the filaments are either so curly or crinkled as to make them unsuitable for carding and spinning into metallic yarn, or the fiber or continuity of grain of the metal filaments is so broken by the cutting, turning, shaving or shredding process, that the filaments, if suitable for carding and spinning, lack sufficient or uniform tensile strength to produce a strong yarn suitable for weaving into a metallic mesh or fabric of uniform strength, texture and quality. Furthermore, the method of producing these filaments, as heretofore proposed, involves the use of special tools requiring frequent resharpening and consequent resetting, resulting in loss of time and lack of uniformity of cut, both as to size and quality; and furthermore, the methods heretofore employed produce a limited quantity of filaments or footage in a given time, unless the machining is done at a relatively high rate of speed, and thus augmenting the objections above referred to. These disadvantages and objections result in relatively high cost and low grade production.

Our invention is designed to avoid these objections and to provide a simple and economical method of producing metallic filaments of substantially uniform length and cross section, and at a uniform rate and grade of production.

We have found that filaments cut, turned, shaved or shredded from blocks, plates, rods or wire by any form of cutting tool present rough or serrated edges which, while desirable for spinning the filaments into metallic yarn in that they cling together more readily than smooth fine drawn wires, the yarn made from such filaments does not possess the maximum tensile strength owing to the fact that the fiber or grain continuity of the filament is broken by the cutting, turning, shaving or shredding operation.

The disadvantages referred to we have found can be overcome, and our objects accomplished, by producing the filaments from thin sheet metal by a shearing or clipping action, resulting in substantially straight filaments, or filaments having a slight long twist, as distinguished from curled or crinkled filaments produced by cutting, turning, shaving or shredding from blocks, rods, etc., as commonly performed by various forms of cutters employed on machine tools such as lathes or planers and variations of those types of machines.

In carrying our invention into effect we use thin sheet metal of the desired thickness, about .002 of an inch, and arrange a pile of about fifty to one hundred or more sheets on a suitable bed on which the stack is fed to a pair of shearing blades. The stack will be fed forward intermittently a space of one or two thousandths of an inch and the shearing blades will shear off the end of the stack to a width equal to each forward feed, producing fifty to one hundred or more filaments with each stroke of the machine. Thus it will be seen that the filaments so produced will all be of uniform length, width and thickness; and the absence of curl or crinkle making carding unnecessary and permitting quick and easy handling when spinning into metallic yarn.

Our invention is illustrated in the accompanying drawing in which, Figure 1 is a perspective view on an enlarged scale representing a filament of metal sheared from a sheet; Fig. 2 illustrates two or more of such filaments twisted or spun into metallic yarn; Fig. 3 illustrates such yarn woven into metallic fabric; Fig. 4 illustrates the metallic filaments embedded in any kind of material

or compound, in either of the forms shown in Figs. 1, 2 and 3; and Figs. 5 and 6 are views of the essential parts of our shearing machine for forming the metallic filaments.

Referring to the drawing, 1 indicates a filamentary strip of metal measuring approximately one by two thousandths of an inch in cross section, and of a length equal to the width of sheet from which it is sheared. In shearing these filaments, the shearing blades may be arranged with or without "rake" to produce filaments practically straight or with more or less twist according to the degree of rake given to the shearing blade. It is well known that in shearing or punching sheet metal, the edges are more or less broken from the shearing stress, and this would be objectionable for our purpose, but with extremely thin sheet metal of about .002 of an inch in thickness this objection is not present or so far reduced as to be negligible. The filaments thus formed may be readily spun into yarn 2, and woven into fabric 3 of any desired weight and mesh, and for a variety of purposes. It will be noted that filaments made by shearing from sheet metal will be rectangular in cross section and present sharp edges, and that in the operation of spinning into yarn the filaments are twisted together causing the sharp edges to engage or bite into each other, thus adding materially to the tensile strength of the yarn. After the spinning operation, the yarn may be subjected to pressure between rolls or otherwise treated to bring the filaments into closer contact and further increase the tensile strength. Also the filaments may be annealed before spinning into yarn, and the yarn or woven fabric may be subjected to hardening and tempering processes as desired. If desired the metallic filaments may be embedded for strengthening purposes in other materials or compounds such as rubber, or other plastic materials, to form sheets, blocks, rods or other forms 4, or filaments spun into yarn may be so employed, or the woven fabric may be embedded in or coated with other materials.

In Figs. 5 and 6 are illustrated the essential parts of our improved shearing machine for forming the metallic filaments from thin sheets. In this machine, 5 is the bed having guide flanges 6 and which may be fixed or adjustable. The bed has a wide longitudinal slotted depression at the bottom of which are two raised ways 7 and 8, the latter preferably being higher than the other and beveled to form a V-rail. In the recess and adapted to slide on the ways is a short slide 9 having a V-groove to fit rail 8, and a lug 10 projecting through the slot to engage a feed screw 11 which is journaled in the end walls of the bed. This screw may be turned intermittently by hand by applying a crank to the squared end 12, or through miter gears 13 driven by suitable connections from the ram 14, or otherwise. Thin metal sheets 15 are placed on table 5 in a stack of the desired thickness, and clamped to the slide by a plate 16. Projecting from slide 9 are two lugs 17 in which clamping levers 18 are hinged and which levers are provided with clamping screws 19. These screws are forced against the slide to cause levers 18 to press plate 16 upon sheets 15 and bind them in position. The forward feed of the slide and the downward movement of ram 14 are so timed that, as the sheets are fed forward, the ram will descend and first cause the spring seated plate 20 to clamp the forward ends of sheets 15. The continued downward movement of the ram then compresses springs 21, and bolts 22 which carry plate 20 will slide upward through holes in head 23. During this movement blade 24 carried by head 23 and stationary blade 25 shear off the ends of sheets 15 which project beyond plate 20, as will be readily understood. The cutting and clearance angles and rake of the shearing blades will be such as are best adapted for the working conditions.

What we claim is:

1. A metallic yarn spun from metallic filaments sheared from sheet metal.

2. A metallic yarn spun from metallic filaments sheared from sheet metal and having a slight twist.

3. A metallic yarn spun from metallic filaments and comprising a plurality of metallic filaments rectangular in cross section and sheared from sheet metal.

4. A metallic yarn spun from metallic filaments and comprising a plurality of metallic filaments rectangular in cross section, sheared from sheet metal, and some or all of such filaments having a long twist.

5. A metallic yarn spun from metallic filaments and comprising a plurality of metallic filaments having flat sides and sheared from sheet metal.

6. A metallic yarn spun from metallic filaments and comprising a plurality of metallic filaments having flat sides and sharp edges and sheared from sheet metal.

7. A metallic yarn spun from metallic filaments and comprising a plurality of metallic filaments rectangular in cross section and having sharp edges and a slight twist produced by shearing from sheet metal.

This specification signed and witnessed this 5th day of November, 1917.

CHRISTIAN RUOFF.
JOSEPH NITSCHMAN.

Witnesses:
AUGUSTUS R. MULLER,
LOUIS L. MÜLLER.