United States Patent [19]

Avant

[11] **3,902,395**

[45] **Sept. 2, 1975**

[54] **STRINGED MUSICAL INSTRUMENT WITH ELECTRONIC TIME DIVISION MULTIPLEXING CIRCUITRY**

[76] Inventor: **William L. Avant**, P.O. Box 1268, Big Bear, Calif. 92315

[22] Filed: **Oct. 11, 1973**

[21] Appl. No.: **405,666**

[52] **U.S. Cl.** **84/1.16**; 84/1.01; 84/DIG. 30

[51] **Int. Cl.**..... **G10h 1/00**; G10h 5/00

[58] **Field of Search** .... 84/1.01, 1.16, 1.17, DIG. 30

[56] **References Cited**

UNITED STATES PATENTS

3,196,729	7/1965	Burns et al.	84/DIG. 30
3,482,028	12/1969	Cox et al.	84/1.16
3,482,029	12/1969	Sines	84/1.16
3,530,226	9/1970	Wheeler et al.	84/1.16
3,530,227	9/1970	Wheeler et al.	84/1.16
3,610,799	10/1971	Watson	84/1.01
3,673,304	6/1972	Dudas	84/1.01
3,697,661	10/1972	Deutsch	84/1.01
3,786,167	1/1974	Borell et al.	84/1.16

Primary Examiner—Richard B. Wilkinson
Assistant Examiner—Stanley J. Witkowski
Attorney, Agent, or Firm—Christie, Parker & Hale

[57] **ABSTRACT**

A musical instrument has electrically conductive strings and a fingerboard with an array of fingerpads each serving as an electrical contact with which each of the strings are selectively connected as they are manually adjusted in length in selecting musical notes to be played when the string is vibrated. For each string there is a separate pick-up device for indicating when the string is vibrating. Circuitry including time-division multiplexing circuitry and gating circuitry controlled by the pick-up devices provide electrical signals representing notes related either directly or preferably harmonically to those played on the instrument.

8 Claims, 7 Drawing Figures

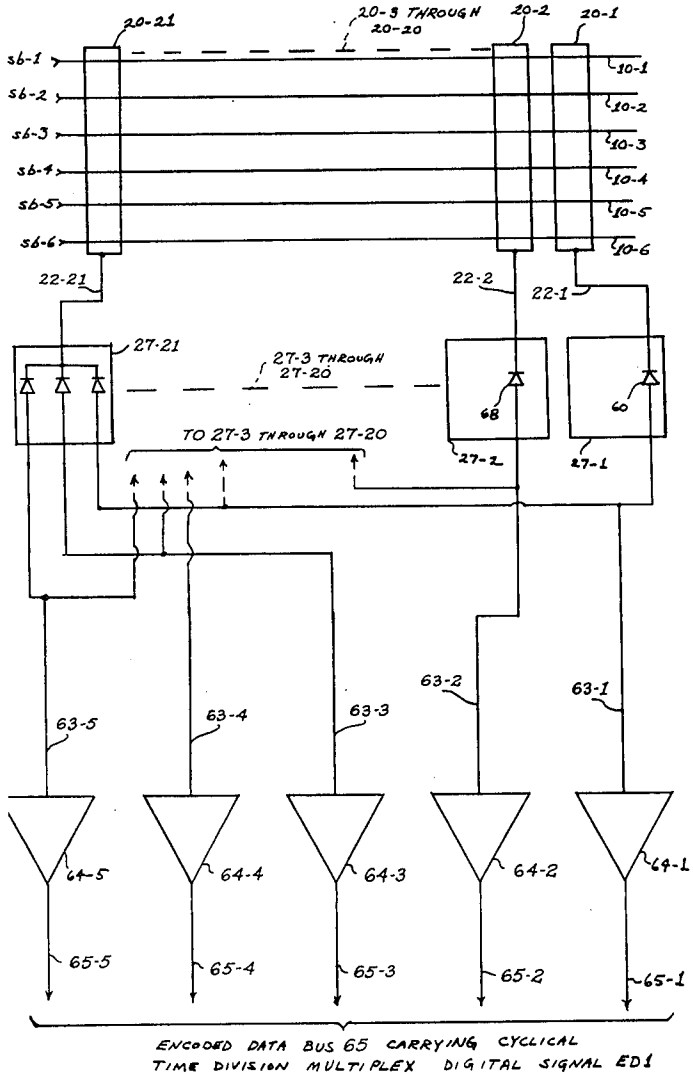

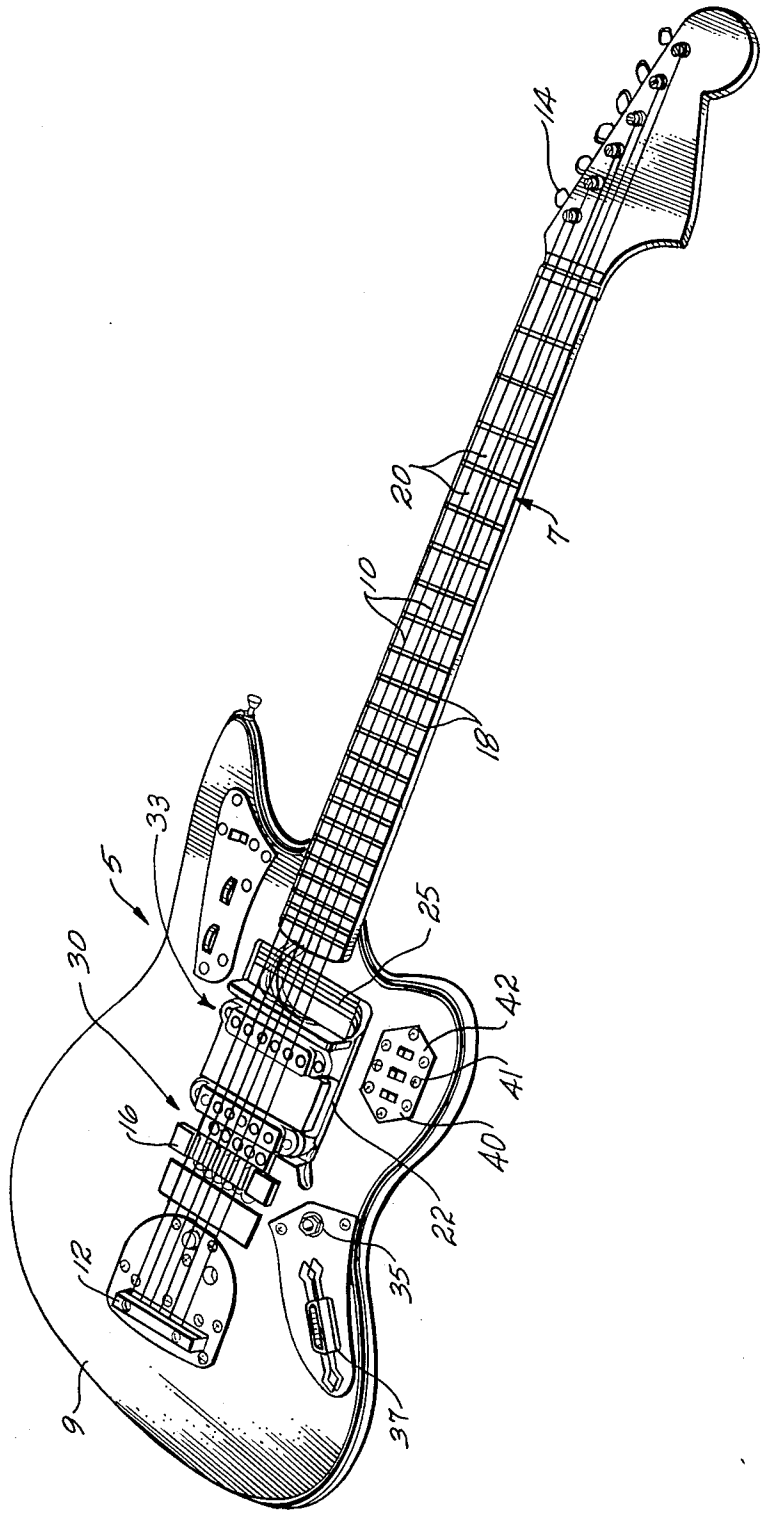

Fig. 1

FIG. 2

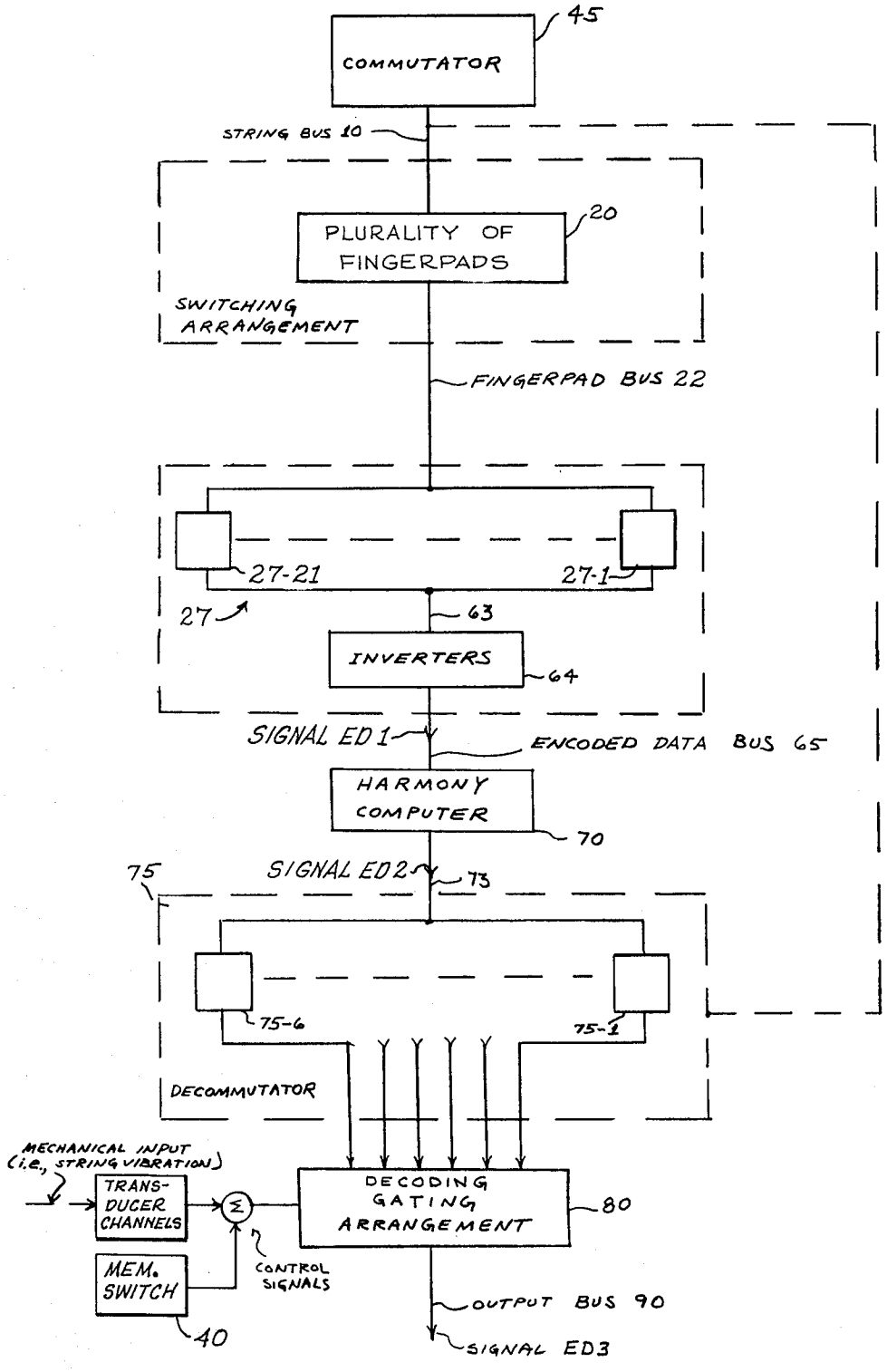
COMMUTATOR
45
STRING BUS 10
PLURALITY OF FINGERPADS
20
SWITCHING ARRANGEMENT
FINGERPAD BUS 22
27-21
27-1
27
63
INVERTERS
64
SIGNAL ED 1
ENCODED DATA BUS 65
HARMONY COMPUTER
70
75
SIGNAL ED 2
73
75-6
75-1
DECOMMUTATOR
MECHANICAL INPUT (i.e., STRING VIBRATION)
TRANS-DUCER CHANNELS
Σ
DECODING GATING ARRANGEMENT
80
MEM. SWITCH
CONTROL SIGNALS
40
OUTPUT BUS 90
SIGNAL ED 3

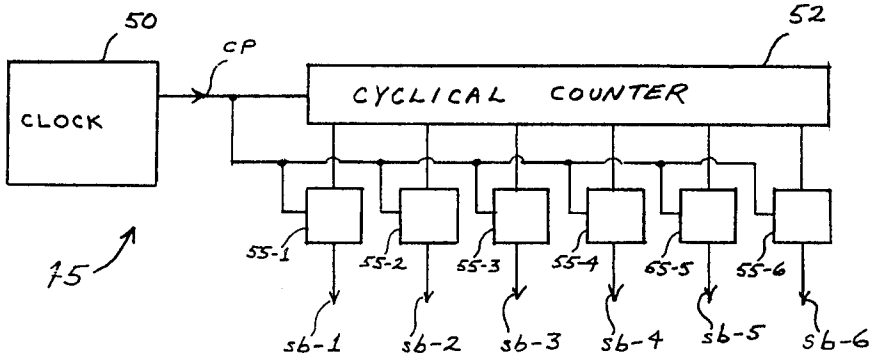
50
CP
52
CLOCK
CYCLICAL COUNTER
15
55-1
55-2
55-3
55-4
55-5
55-6
sb-1
sb-2
sb-3
sb-4
sb-5
sb-6

FIG 3A

FIG. 3B

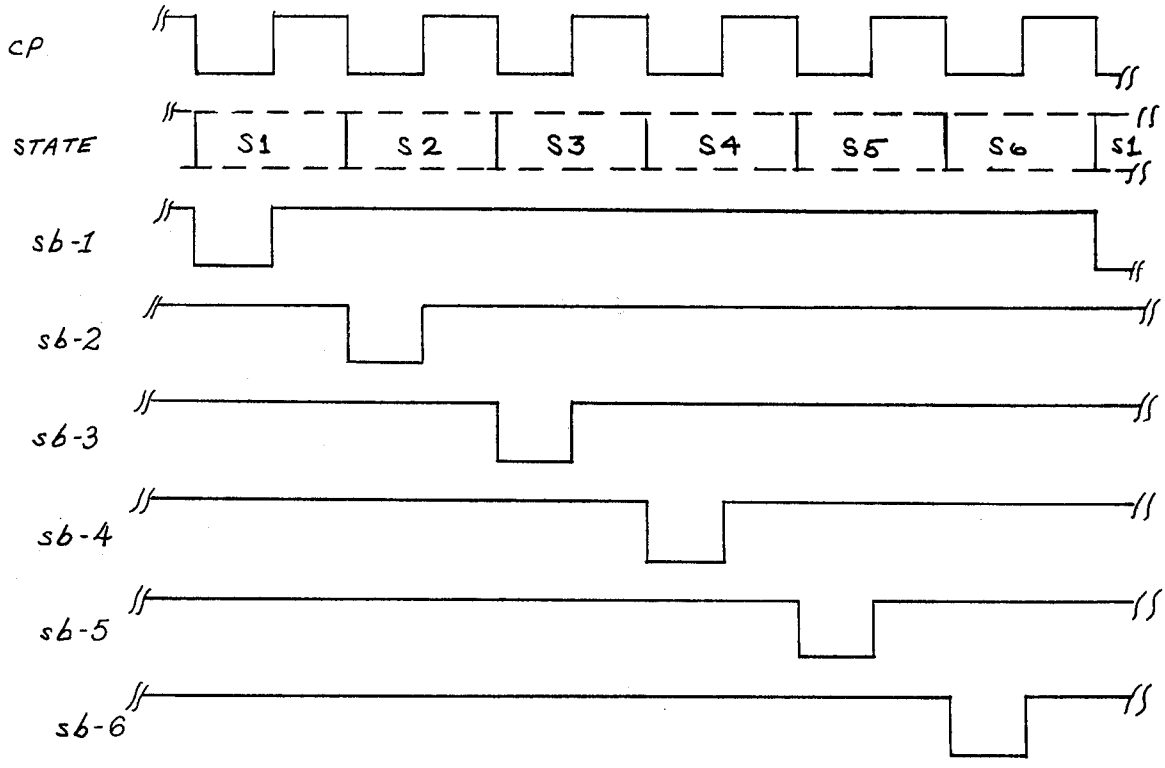
CP
STATE
S1
S2
S3
S4
S5
S6
S1
sb-1
sb-2
sb-3
sb-4
sb-5
sb-6

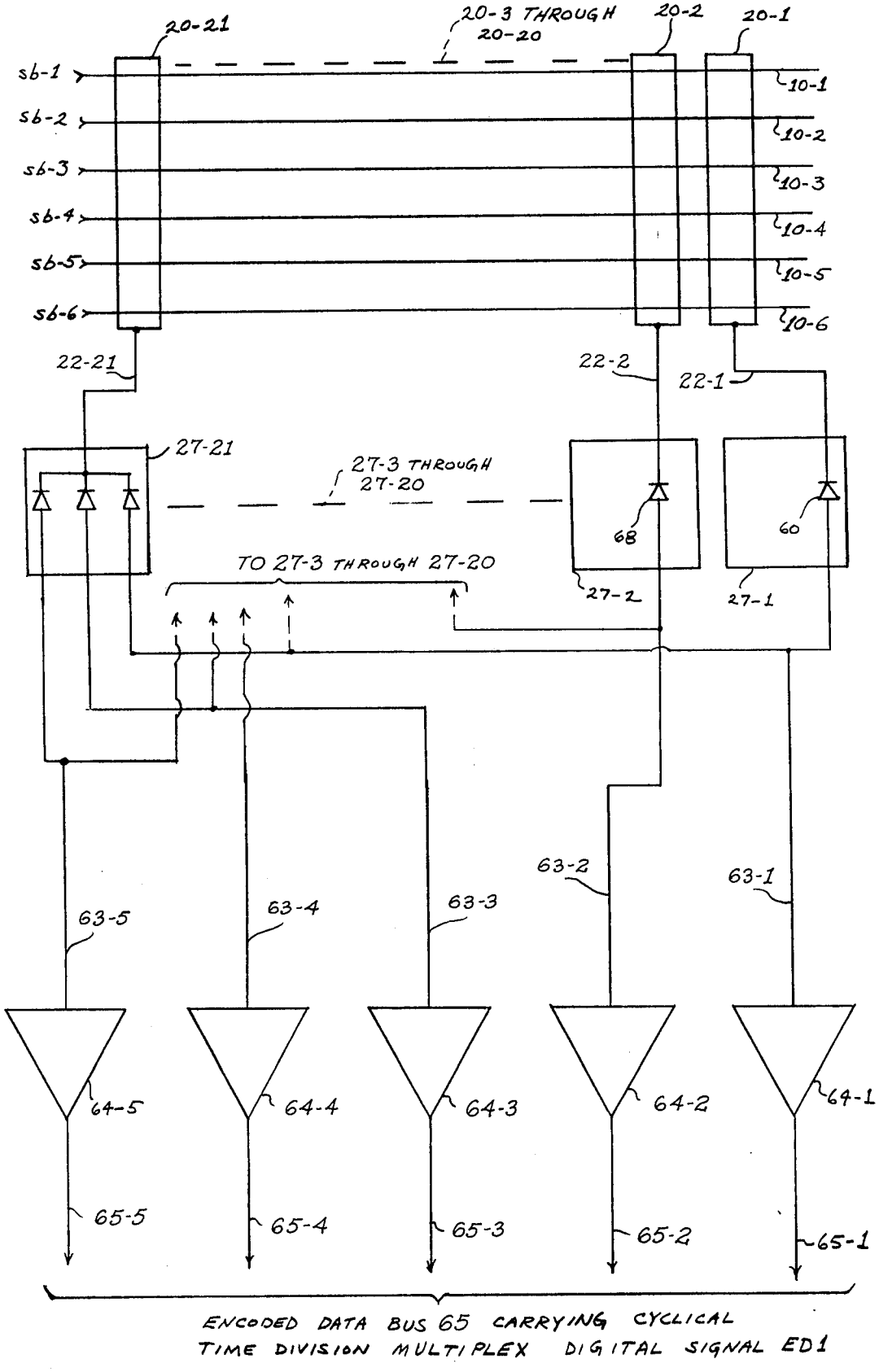
20-21
20-3 THROUGH 20-20
20-2
20-1
sb-1
sb-2
sb-3
sb-4
sb-5
sb-6
10-1
10-2
10-3
10-4
10-5
10-6
22-21
22-2
22-1
27-21
27-3 THROUGH 27-20
68
60
TO 27-3 THROUGH 27-20
27-2
27-1
63-5
63-4
63-3
63-2
63-1
64-5
64-4
64-3
64-2
64-1
65-5
65-4
65-3
65-2
65-1
ENCODED DATA BUS 65 CARRYING CYCLICAL TIME DIVISION MULTIPLEX DIGITAL SIGNAL ED1

FIG. 4

FIG. 5

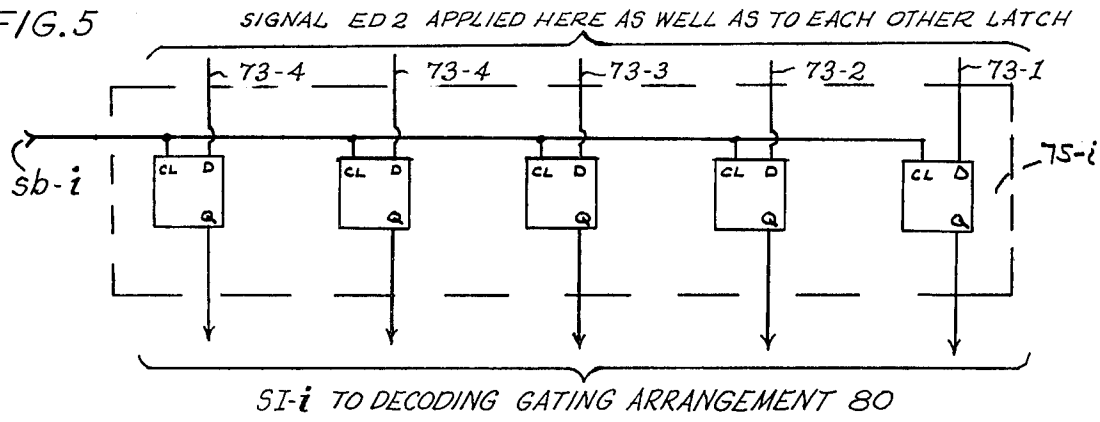
SIGNAL ED 2 APPLIED HERE AS WELL AS TO EACH OTHER LATCH
73-4
73-4
73-3
73-2
73-1
sb-i
CL D Q
75-i
SI-i TO DECODING GATING ARRANGEMENT 80

FIG. 6

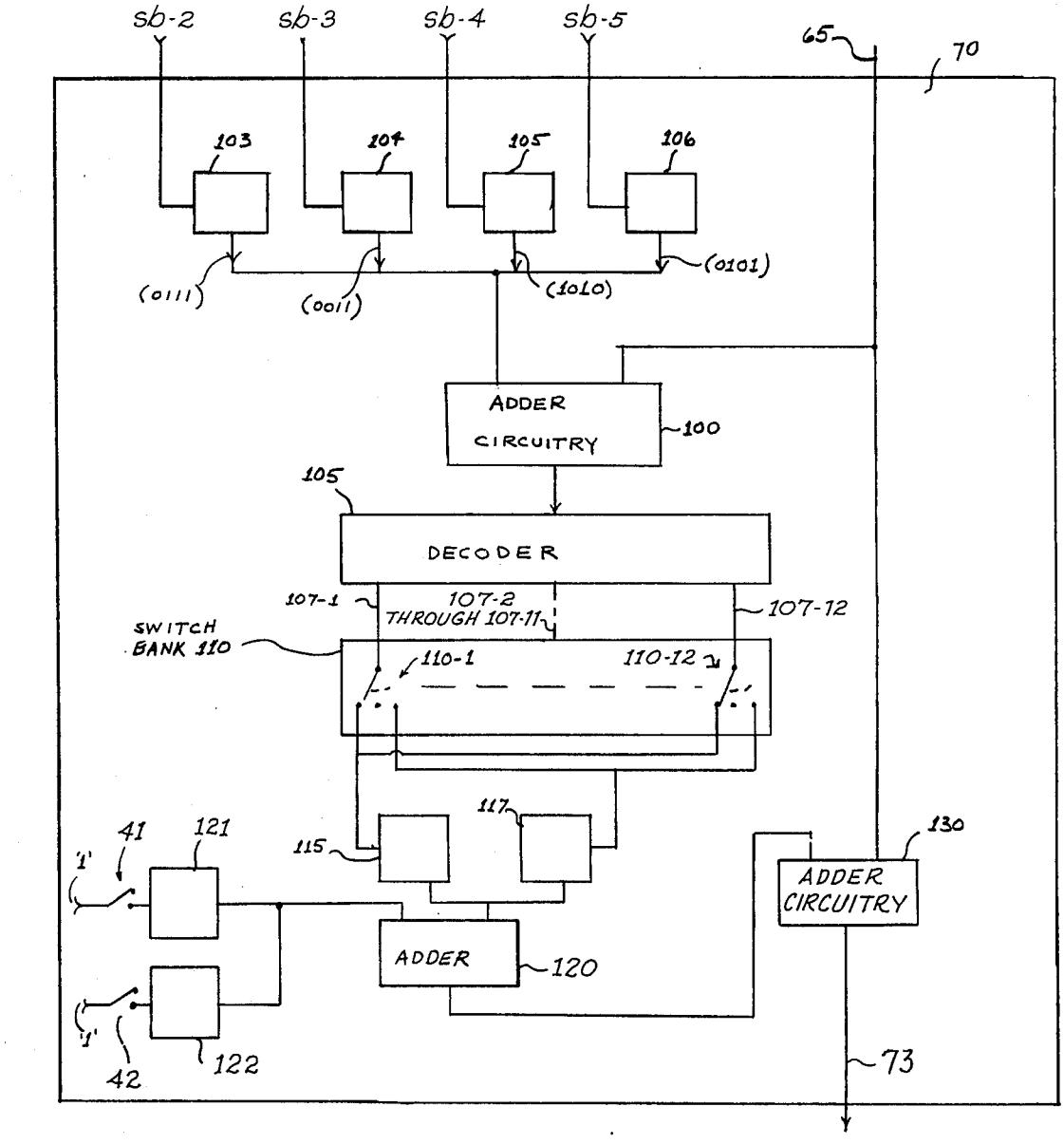
sb-2
sb-3
sb-4
sb-5
65
70
103
104
105
106
(0111)
(0011)
(1010)
(0101)
ADDER CIRCUITRY
100
105
DECODER
107-1
107-2 THROUGH 107-11
107-12
SWITCH BANK 110
110-1
110-12
117
115
41
121
130
ADDER CIRCUITRY
ADDER
120
122
42
73

STRINGED MUSICAL INSTRUMENT WITH ELECTRONIC TIME DIVISION MULTIPLEXING CIRCUITRY

BACKGROUND OF THE INVENTION

This invention relates to musical instruments of the type adapted to provide electrical signals representing notes selected for playing.

Various patents teach the idea of providing a musical instrument, such as a guitar, with electrical circuitry adapted to supply control signals to effect remote playing of another instrument such as an electrically controlled organ. In a typical prior art approach, such as that disclosed in U.S. Pat. No. 3,482,028, the fingerboard of the guitar has arranged on it a matrix of electrical switch contacts. Such a matrix comprises a row for each string, there usually being six such rows in a guitar; and it comprises a column for each fret, there usually being 19 frets although more are sometimes provided. The strings of the guitar are electrically conductive and, in combination with the contacts, form a plurality of switches, one such switch for each fret-string combination. In playing the instrument, of course, the strings are manually depressed against the frets so as to adjust their effective length to select desired notes. As the strings are so depressed, switch contacts are closed, and circuitry responsive thereto develops signals indicating what note or notes have been selected.

As was mentioned, it is common to have six strings and at least 19 frets. Thus, there are at least 114 fret-string combinations and, accordingly, in the above-described approach, there are a corresponding 114 switch contacts. Since the switch contacts must be electrically isolated from each other and since there are such a large number of them, they must each be quite small in practice. Also, each must be precisely mechanically aligned in the proper position on the fingerboard; otherwise, a switch closure might not be effected when the musician frets a string. Significant too is a problem with this approach that arises from the manner in which many musicians prefer to play a guitar. That is, many guitarists, by habit or design, will "sway" the strings while playing. By this is meant that the strings are depressed sideways as well as downwardly. When this is done, a fretted string can completely miss the appropriate contact, or, possibly worse, it can, when severely swayed, be connected to an adjacent contact.

SUMMARY OF THE INVENTION

The musical instrument of this invention comprises a plurality of electrically conductive strings that extend parallel to each other along the length of a fingerboard, and preferably is embodied in a fretted guitar. The fingerboard has mounted on it a plurality of electrically conductive fingerpads. Each fingerpad is positioned at a respective one of a plurality of spaced-apart locations where the strings are depressed to adjust their effective length. Significantly, in contrast to prior art approaches, each fingerpad extends transversely beneath the parallel strings so that any string can be depressed into contact with it. That is, instead of a multi-row, multi-column swiching matrix of many small switches, there is provided a simpler mechanical construction to define a switching arrangement. Moreoever, the switching arrangement is not subject to the above-described problems that have arisen incident to swaying. In the preferred embodiment, a plurality of pick-up elements are each disposed adjacent a respective string and each generates a control signal in response to vibration of the respective string. Circuitry including time-division multiplexing circuitry and gating circuitry provide electrical signals representing notes related to those played on the instrument.

The time-division multiplexing circuitry includes circuit means that cooperate with the switching arrangement to produce a cyclical time-division multiplex digital signal that at separate sequential intervals within each cycle indicates the effective length of a respective one of the strings, such effective length being related of course to a note selected for playing. Incident to the use of this multiplex technique, any one particular binary format carried in parallel by the same set of wires represents at different points in time each of a plurality of selected notes. A significant advantage of this is that fewer switching-signal-carrying wires need be connected to the instrument than in prior art approaches. For example, in the above-described prior art guitar there are 114 switching-signal wires, each individually connected to a separate one of the 114 contacts. In an embodiment of this invention, only five switching-signal wires are used; yet, as much information is carried by them.

Preferably, there is included within the circuitry an arrangement for computing representations of harmony notes. This arrangement is preferably used in combination with an electronic guitar. In use, the musician plays the electronic guitar in a normal manner, the speaker system for the electronic guitar reproducing directly the notes played by the guitarist and at the same time, by remote control, another instrument accompanies him in harmony.

BRIEF DESCRIPTION OF THE DRAWINGS

FIG. 1 is a top view of a guitar, which is the preferred embodiment of this invention;

FIG. 2 is a block diagram of circuitry used in this preferred embodiment;

FIGS. 3A and 3B are a block diagram and a group of timing diagrams respectively, showing the preferred arrangement and operation of a control signal developing part of the multiplexing circuitry used in this invention;

FIG. 4 is a schematic and block diagram showing the preferred arrangement of a switching arrangement within the multiplexing circuitry;

FIG. 5 is a block diagram of a representative one of a plurality of latch elements within the multiplexing circuitry; and

FIG. 6 is a block diagram of a harmony note computer included within the preferred embodiment.

DETAILED DESCRIPTION

FIG. 1 shows a guitar **5**, which is the preferred embodiment of the musical instrument of this invention. The guitar has an elongated fingerboard **7** extending from a body **9**. A plurality of elongated strings **10** (hereinafter sometimes collectively referred to as the string bus **10**) span the guitar, each string being secured near one of its ends by a string-holding mechanism **12** on the body and having its opposite end secured to a respective one of a plurality of tuning pegs **14** on the fingerboard. The strings are each electrically conductive whereas the mechanical supports for them are not, so that the strings are electrically isolated from each

other. Thus, the conventional mechanical elements of the guitar such as the bridge **16** on the body and the plurality of frets **18** on the fingerboard are each insulated.

A plurality of electrically conductive fingerpads **20** are arranged on the fingerboard. Each fingerpad is positioned at a respective one of a plurality of spaced-apart locations between adjacent frets. It is at the frets that the guitarist depresses the strings to adjust the effective length, thereby to select the notes to be played when the strings are plucked.

Each fingerpad extends transversely across the board so that any string can be depressed into contact with it. The electrically conductive fingerpads and the electrically conductive strings thus cooperate to form a switching arrangement, which is discussed in more detail below.

Each fingerpad is individually connected to a separate one of a plurality of switching-signal carrying wires that are collectively referred to as fingerpad bus **22.** There is mounted on the body an encoder board **25** which is a circuit board supporting a plurality of encoding gating arrangements **27** (FIG. **2**) that receive switching signals carried by the fingerpad bus.

A plurality of pickup elements **30** are each disposed on the body adjacent a respective string. Each of these pickup elements provides for generating a control signal in response to vibration of a respective string, incident to that string being plucked.

Preferably, as shown, a separate plurality of pickup elements **33** are provided. These pickup devices are used in connection with a conventional electronic guitar amplifier and speaker arrangement (not shown). An electrical connector **35** is provided for interconnecting these pickup elements and the amplifier.

A separate connector **37** on the body is provided for electrically interconnecting the guitar to other circuitry which is shown in block diagram form in FIG. **2.** Also mounted on the body are a plurality of manual control switches **40, 41** and **42** whose function will be described below.

FIG. **2** shows an overall block diagram of circuitry that provides electrical output signals representing musical notes. A commutator **45** is connected by the string bus **10** to the switching arrangement. As shown in FIG. **3A**, the commutator includes a clock **50** that produces a clocking signal CP. Clocking signal CP has the form of a pulse train, preferably at an ultrasonic frequency. A conventional cyclical counter **52** counts the clock pulses. Preferably, counter **52** cyclically counts through six states, S1–S6 (see FIG. 3B). A plurality of decoders **55-1** through **55-6** each decode a separate one of the states of the counter. Each of the decoders, under gating control of the clocking signal, provides a separate one of a plurality of signals sb**1**–sb**6.**

The operation of the counter is illustrated in the wave form diagrams of FIG. 3B. As shown, the clocking signal CP switches back and forth between logical '0' (low) and logical '1' (high) levels. Under trigger control of the clocking signal, the counter cyclically counts through states S1–S6, changing its state on each logical '1' to logical '0' transition in the clocking signal. The signal sb**1**, produced by the decoder **55-1,** assumes a logical '0' value during each part of the cycle wherein the clocking signal has a logical '0' value and the counter is in state S1. At all other times during the cycle, the signal sb1 has a logical '1' value. The signals *sb*2–*sb*6, produced respectively by decoders 55-2 through 55-6 have similar timing diagrams, each being at the logical '0' value during corresponding portions of sequential states occurring within the cycle.

The signals *sb*1–*sb*6, as indicated in FIG. 4, are applied to the strings 10-1 to 10-6, respectively. (In the block diagram of FIG. 2, these strings are shown collectively as string bus 10.) Beneath the strings, there are 21 fingerpads 20-1 through 20-21 of which 20-1, 20-2, and 20-21 are shown by way of example.

FIG. **4** also shows respective wires **22-1, 22-2,** and **22-21** of the fingerpad bus **22.** The wires of the fingerpad bus individually connect the fingerpads to respective ones of the plurality of the encoding gating arrangements **27-1** through **27-21** of which **27-1, 27-2,** and **27-21** are shown by way of example. Each encoding gating arrangement includes one or more (up to five) diodes. In gating arrangement **27-1** for example, there is one diode **60** having its cathode connected to wire **22-1.** The output of encoding gating arrangements are connected to the wires forming an encoded data bus **63.** These wires are individually shown in FIG. **4** as **63-1** through **63-5.** A plurality of inverter circuits **64-1** through **64-5** each have an input connected to a separate one of the wires of bus **63** and an output connected to a separate one of the wires of encoded data bus **65.**

In operation, there is developed in the data bus **65** a cyclical time-division multiplex signal ED**1** that at separate sequential intervals within each cycle indicates the effective length of one of the strings. By way of specific example, consider the guitarist operation when the guitarist simultaneously frets string **10-1** into contact with fingerpad **20-1** and string **10-6** into contact with finger **20-2.** In this specific example, the, ED**1** signal has the following pattern. During state S**1** of the counter while signal sb**1** is low, wire **63-1** is held low (i.e., a logical '0') by virtue of the flow path from string **10-1** through fingerpad **20-1,** and diode **60.** During this state, none of the other wires **63-2** through **63-5** are held low. Accordingly, at this time, the encoding of signal ED**1,** at the output of the inverters, is expressed as 00001. During states S2 through S5 of the cycle, none of the wires **63-1** through **63-5** is held low. The encoding of the signal ED**1** at each of these times is expressed as 00000. During state S6 of the cycle, while signal sb**6** is held low, wire **63-2** is held low by virtue of the flow path from string **10-6** through fingerpad **20-2,** and a diode **68.** Accordingly, at this time, the encoding of signal ED**1** at the output of the inverters is expressed as 00010.

Preferably, the guitar strings are tuned in the conventional manner. That is, strings **10-1** through **10-6** are tuned such that they play the notes E, B, G, D, A, and E respectively when plucked while open (i.e., not fretted).

A truth table for the signal ED**1** as it relates to the length of the sampled string is given below in Table I. In Table I, the effective length of the string is expressed in terms of which, if any, of the fingerpads is in contact with the string through fretting.

TABLE 1

Fingerpad to which sampled string is fretted	Coding of signal ED1
none (i.e., string open)	00000
20–1	00001
20–2	00010

TABLE 1-Continued

Fingerpad to which sampled string is fretted	Coding of signal ED1
20–3	00011
20–4	00100
20–5	00101
20–6	00110
20–7	00111
20–8	01000
20–9	01001
20–10	01010
20–11	01011
20–12	01100
20–13	01101
20–14	01110
20–15	01111
20–16	10000
20–17	10001
20–18	10010
20–19	10011
20–20	10100
20–21	10101

Preferably, as indicated in FIG. **2**, a harmony computer **70** (to be described below with reference to FIG. **6**) is connected by data bus **65** and a data bus **73** between the encoding arrangement and a decommutator **75**. The output of the harmony computer is a digital signal **ED2**, and as with that of the gating arrangements, it is a time-division multiplex digital signal.

The decommutator comprises six memory cells **75-1** through **75-6** of which **75-1** and **75-6** are shown by way of example in FIG. **2**. To illustrate their construction an arbitrary one, **75-*i***, is shown by way of example in FIG. **5**. Each of the memory cells corresponds to a respective one of the strings. Each of the memory cells is cyclically loaded so that each provides a stored indication (**SI-1-SI-6**) related to what the effective length of its corresponding string was at the time the memory cell was loaded. Within each memory cell, there are five flip-flops preferably of the "D type." Thus, each flip-flop has a D input, a clock input (CL), and an output Q. This type of flip-flop has the characteristic that the logical level applied to its D input is transferred to its Q output upon a predetermined transition in logical level in its clock input. As shown in FIG. **5**, the clock inputs of the five flip-flops are directly connected together and in turn are connected to receive as a clocking signal one of the signals sb. (In FIG. **2**, a single dashed line is shown to represent this coupling between the commutator and the decommutator.)

Each memory cell is connected by a bus to a decoding arrangement **80** (FIG. **2**). Decoding gating arrangement **80** is responsive to the stored indications provided by the memory cells and also to control signals derived from the pickup element to provide on an output bus **90** a multi-bit digital signal **ED3** representing notes related to those being played on the instrument. The output bus comprises a plurality of wires (not individually shown), one for each separate note. The digital signal **ED3** is encoded such that a logical '1' is carried by each wire corresponding to a note to be indicated and a logical '0' is carried by the other wires of the bus **90**.

There are well known circuits available to implement the function of the decoding gating arrangement. In the preferred embodiment, integrated circuit chips sold by National Semiconductor Corporation under the designation 7441 are used. Each of these chips has its input connected to a selected one of the memory cells. The chips are of the well-known "wired-or" characteristic and accordingly their output can be directly connected together. The outputs of different chips that indicate the same note preferably are so connected together. The control signals from the transducer channels are applied to the V_{CC} inputs of these circuits so that they can provide a logical '1' output only when a corresponding string has been plucked. In an advantageous feature, any particular note can be "held" as long as desired. To this end, in the preferred embodiment the memory switch **40** is provided. As indicated in FIG. **2**, the logical OR function of the output of the memory switch **40** and the individual control signals from the transducer channels, and each is applied to the respective V_{CC} inputs of these circuits. Thus, with the memory switch **40** closed, notes are indicated simply as a result of fretting without actual plucking.

In the preferred embodiment in which there is provided a harmony computer the truth table given in Table II defines the logical function of the decoding arrangement **80**.

TABLE II

Coding of Signal ED2	Musical Note Indicated on Output Bus 90 (With separate reference to each of the stored indications SI-1 through SI-6)					
	SI-1	SI-2	SI-3	SI-4	SI-5	SI-6
00000	D#2	B♭2	F#2	C#1	G#0	D#0
00001	E2	B2	G2	D1	A1	E0
00010	F3	C2	G#2	D#1	B♭1	F1
00011	F#3	C#2	A2	E1	B1	F#1
00100	G3	D2	B♭2	F2	C1	G1
00101	G#3	D#2	B2	F#2	C#1	G#1
00110	A3	E2	C2	G2	D1	A1
00111	B♭3	F3	C#2	G#2	D#1	B♭1
01000	B3	F#3	D2	A2	E1	B1
01001	C3	G3	D#2	B♭2	F2	C1
01010	C#3	G#3	E2	B2	F#2	C#1
01011	D3	A3	F3	C2	G2	D1
01100	D#3	B♭3	F#3	C#2	G#2	D#1
01101	E3	B3	G3	D2	A2	E1
01110	F4	C3	G#3	D#2	B♭2	F2
01111	F#4	C#3	A3	E2	B2	F#2
10000	G4	D3	B♭3	F3	C2	G2
10001	G#4	D#3	B3	F#3	C#2	G#2
10010	A4	E3	C3	G3	D2	A2
10011	A#4	F4	C#3	G#3	D#2	B♭2
10100	B♭4	F#4	D3	A3	E2	B2
10101	B4	G4	D#3	A#3	F2	C2
10110	C4	G#4	E3	B♭3	F#2	C#2
10111	C#4	A#5	F3	B3	G2	D2

By way of further explanation of Table II, consider the following. The guitarist plays the musical note **F1** by fretting string **10-6** into contact with fingerpad **20-1** and simultaneously plucking that string. This fretting of string **10-6** causes during state **S1** of the cycle the signal **ED1** to assume the binary code 00001. As will be explained below, through selective setting of the harmony computer, the signal **ED2** can differ from or equal the signal **ED1**. When it is desired to have a direct relationship between the musical notes indicated on output bus **90** and the notes played by the guitarist, the binary number 1 is added to the signal **ED1** to form the signal **ED2**. Thus, as shown in Table II, the binary code 00010 (i.e., 00001 plus 1) for the signal **ED2** is decoded to indicate the note **F1**. On the other hand, it is possible to have an indirect relationship. For example, to indicate a "flat note", the signal **ED1** is not modified. Then when the guitarist plays the note F1 there will be indicated the note **E1**. Alternatively, to indicate a "sharp note" , the signal **ED1** is modified by the addition of two. Then when the guitarist plays the note F1 there will be indicated the note **F # 1**.

A unique and highly advantageous preferred feature is provided by the harmony computer **70**, shown in more detail in FIG. **6**. The function of the harmony computer is to convert signal ED1 into signal ED2 such that the notes represented by signal ED2 are related in a desired harmonic relationship with the notes actually selected by the guitarist. Accordingly, the guitarist can use the harmony computer so that while he plays the electronic guitar in his normal manner he is accompanied by an electric organ, for example, which plays harmonically related notes. For example, the relation between each of selected notes played by the guitar and corresponding notes played by the organ can be a harmonic third relationship. That is, the notes differ by three half-tones on the musical scale. And, during the same tune, other notes can differ by four half-tones for example.

As part of its overall function, the harmony computer provides for detecting what note (relative to a musical octave) has been selected by fretting. To this end, the bus **65** is connected to adder circuitry **100**. Also connected to the input of adder circuitry **100** are adder logic gates **103, 104, 105** and **106**. When string **10-2** is being sampled by the counter (i.e., signal sb-2 of FIGS. **3A, 3B** and **5** is low), gate **103** in response provides a binary number 0111. When string **10-3** is being sampled, gate **104** in response provides binary number 0011. When string **10-4** is being sampled, gate **105** in response provides a binary number 1010. And, when string **10-5** is being sampled, gate **106** in response provides the binary number 0101.

As a result of this arrangement, the sum produced by adder circuitry **100**, will, irrespective of which string is being sampled, uniquely indicate which note within an octave was selected. Table III, given below, gives the coding of this sum in relationship to the notes selected by the guitarist. (Table III is based upon the guitar strings being tuned in a conventional manner.)

TABLE III

Sum	Note
0000	E
0001	F
0010	F#
0011	G
0100	G#
0101	A
0110	B♭
0111	B
1000	C
1001	C#
1010	D
1011	D#

A decoder, which peferably is an SN74154 also sold by National Semiconductor Corporation, decodes the sum. The decoder **105** has 12 output wires that are used here. These are wires **107-1** through **107-12** and each is individually connected to one of a plurality of switches **110-1** through **110-12** (not all shown). Each of these switches is a single-pole, triple-throw switch. Each of these switches is associated with a separate one of the twelve notes within an octave.

A logical gating arrangement **115** and a logical gating arrangement **117** each has a control input connected to interconnected contacts of the switches **110**. Each of these gating arrangements has its output connected to one input of adder circuitry **120**. The other input for adder circuitry **120** is connected to the outputs of logical gating arrangement **121** and **123** which in turn are controlled by the switches **41** and **42** located on the body of the guitar. The output of adder circuitry **120** is connected to one input of adder circuitry **130** which has its other input connected to bus **65**.

In mathematical terms, the harmony computer provides a means for effecting a selected one of a plurality of mappings between the signal ED1 and ED2. In one selected mapping, the signal ED2 is a direct copy of the signal ED1. To do this, the various switches are set as follows. Each of the switches **110-1** through **110-12** is set in it center position so that, irrespective of what note is played, neither gate **115** nor gate **117** is activated. Also switches **40** and **41** are each opened. With the switches so set, the output of adder circuitry **120** is a constant (i.e., 0). Thus adder circuitry **130** adds 0 to signal ED1 and the sum it produces (i.e., signal ED2) is a direct copy.

In another selected mapping, the signal ED2 has a binary value of three greater than the binary value of signal ED1 irrespective of which note is played. To do this, the switches are set substantially the same as they are for the direct copy but the switch **41** is closed. With switch **41** being closed, gating arrangement **121** provides the binary number 3 to the adder circuitry **130**.

A multiplicity of other mappings are achieved by selective switching of the switches **110-1** through **100-12**. As a representative example, switch **110-1**, which is associated with the note E, can be switched to connect its corresponding decoder output to gate **115**. Thus each time any one of the E notes (there being more than one E note because of multiple octaves) is selected, gate **115** is activated and it causes the binary number one to be added to the other input of adder circuitry **120**. On the other hand, switch **110-1** can be switched to connect its corresponding decoder output to gate **117**. In this case, each time any one of the E notes is played, gate **117** is activated and it causes the binary number two to be added.

Consider now as a representative example the following operation. In this example, the guitarist desires to play the electronic guitar in a conventional manner and be accompanied in a predetermined harmonic relationship by a slave instrument such as an electrically controlled organ or an electronic music synthesizer. The desired harmonic relationship is such that each time he plays any one of a first plurality of notes (within any octave) on the guitar, the organ will play a note three half-tones higher in the musical scale. This plurality in this particular example comprises the notes A, B♭, B, C, C#, D, D#, F, F#, and G#. On the other hand, he desires "to play flat" with respect to G and "to play sharp" with respect to E. Thus when he plays A, for example, which is in the first plurality, the organ plays C. When he plays G on the guitar, the organ plays the flat note F# (i.e. flat relative to harmonic third). When he plays E on the guitar, the organ plays the sharp note G# (i.e., sharp relative to harmonic third). To implement this, the switches are set as follows. Switch **40** is closed to activate gating arrangement **121**. Each of the switches within the switching bank **110** which correspond to the first plurality are switched to the "natural" position so as to activate gating arrangement **115** to cause the binary numer 1 to be added to the binary number 3 derived from gating arrangement **121**. The switch within switching bank **110** which corresponds to the note G is switched to the "flat" position (i.e., cen-

tered) so that neither gating arrangement **115** or **117** is activated when this note is played on the guitar. The switch within switching bank **110** which corresponds to the note E is switched to the "sharp" position so as to activate gating arrangement **117** each time this note is played on the guitar. When activated, gating arrangement **117** causes the binary number 2 to be added to the binary number 3 derived from gating arrangement **121.**

In terms of the coded signals, when the guitarist plays the note EO by plucking string **10-6** while it is open, the signal ED1 as shown in Table I is coded as 00000. Since E is being played "sharp", adder circuitry **120** forms the binary sum **0101** (i.e., the decimal number 5). In turn, adder circuitry **130** adds 00000 and 0101 and yields the sum 00101, which as shown in Table III corresponds to the note G# 1 (see column SI-6 corresponding to string **10-6**).

The switch 42 and the logical gating arrangement **123** provide substantially the same function as those described above. The difference in operation relates to the provision of playing a harmonic fifth. That is, the arrangement **123** provides for adding binary 0101 in contrast to arrangement **121** providing for adding binary 0011.

What is claimed is:

1. In a stringed musical instrument of the type adapted to provide electrical signals representing notes selected for playing, the combination comprising:

an elongated fingerboard;

a plurality of electrically conductive fingerpads each being mounted on the fingerboard at a respective one of a plurality of longitudinally spaced-apart locations;

a plurality of electrically conductive strings;

means for mounting the strings at fixed points so that the strings extend longitudinally adjacent the fingerboard;

each fingerpad extending transversely across the fingerboard so that any string can be depressed into electrical contact with it; and

circuit means electrically connected to the fingerpads and the strings for producing a time-varying, parallel-by-bit encoded digital signal that, when a manually selected string is depressed into electrical contact with a manually selected fingerpad, identifies the manually selected string and fingerpad.

2. A musical instrument comprising:

an elongated fingerboard;

a plurality of electrically conductive strings oriented to be parallel to each other and to extend longitudinally adjacent the fingerboard, each string having an adjustable effective length that is defined between a fixed first point thereof and a selectable second point thereof, the effective length of a string being manually adjusted in use by depressing the strings at a selected second point to select a note to be played when the string is vibrated;

a plurality of electrically conductive fingerpads each being mounted on the fingerboard at a respective one of longitudinally spaced-apart locations where the strings are depressed to adjust their effective length, each fingerpad extending transversely across the fingerboard so that any string can be depressed into contact with it;

circuit means electrically connected to the fingerpads and the strings for producing a cyclical time-division multiplex digital signal that at separate sequential intervals within each cycle indicates the effective length of a respective one of the strings;

a plurality of memory cells respectively corresponding to the plurality of strings in that there is a separate memory cell for each string;

means responsive to the multiplex signal for cyclically loading the memory cells so that each provides a stored indication related to what the effective length of its corresponding string was at the time the memory cell was loaded;

a plurality of pick-up elements each disposed adjacent a respective string and each for generating a control signal in response to vibration of the respective string; and

an output bus comprising a signal transmission lead for each note playable on the instrument; and

gating means responsive to the stored indications provided by the memory cells and the control signals generated by the pick-up elements for providing to the output bus a multi-bit digital signal representing notes related to those being played on the instrument.

3. The musical instrument of claim 2 wherein said circuit means includes a plurality of encoding gating arrangements each having an input coupled to a separate fingerpad, a bus for carrying the multiplex digital signal, and wherein each encoding gating arrangement has an output coupled to the bus and gating circuit means that is activated by the switching contact between the fingerpad to which it is coupled and a string in electrical contact therewith to apply a coded multi-bit digital signal to the bus.

4. The musical instrument of claim 3 wherein said circuit means includes a commutator providing a plurality of sampling signals, each sampling signal being applied to a separate one of the strings and being coupled to the encoding gating arrangements through switching action of the strings and fingerpads.

5. The musical instrument of claim 4 wherein each memory cell comprises a plurality of latch circuits each having a clocking input, the clocking inputs of each memory cell being responsive to a respective one of the sampling signals.

6. The musical instrument of claim 2 wherein the memory cell loading means includes a harmony computer adapted to selectively modify the multiplex signal so that each memory cell upon being loaded stores an indication of a musical note bearing a desired harmonic relationship with respect to the effective length of the corresponding string.

7. The musical instrument of claim 6 wherein the harmony computer includes a separate manually settable switch for each of a plurality of musical notes, the harmony computer modifying the multiplex signal in accordance with the settings of the manually settable switches.

8. The musical instrument of claim 7 wherein the harmony computer includes adder circuit means for forming the binary sum of the multiplex signal and a binary number related to the setting of the manually settable switches.

* * * * *