Feb. 9, 1965 L. R. ADAMS ETAL 3,168,897

FLUID CONTROL APPARATUS

Filed Dec. 22, 1961

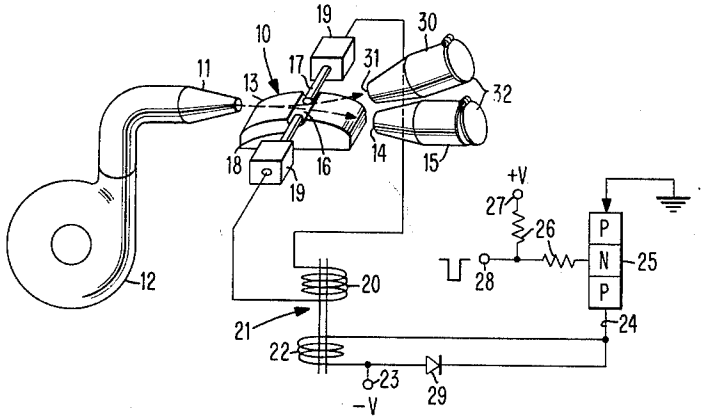

FIG. 1

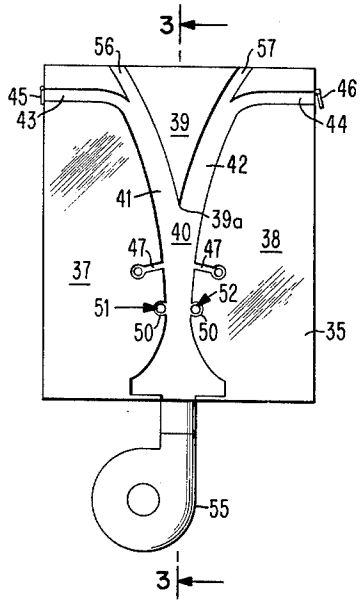

FIG. 2

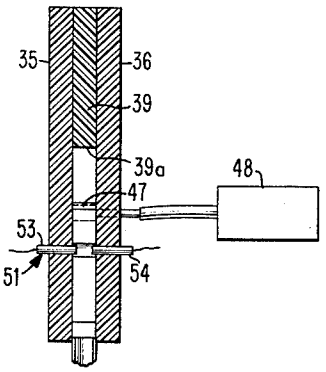

FIG. 3

INVENTORS.
LESTER R. ADAMS
BERNARD J. GREENBLOTT

BY K. P. Johnson
ATTORNEY

United States Patent Office 3,168,897 Patented Feb. 9, 1965

3,168,897

FLUID CONTROL APPARATUS

Lester R. Adams, Endwell, and Bernard J. Greenblott, Binghamton, N.Y., assignors to International Business Machines Corporation, New York, N.Y., a corporation of New York

Filed Dec. 22, 1961, Ser. No. 161,709
7 Claims. (Cl. 137—81.5)

This invention relates generally to fluid switches and more particularly to fluid switches controlled by electrical discharge.

Pneumatic and hydraulic switches have been used generally for dynamic control systems to achieve accurate, reliable and easy positioning of mechanical components. More recently these switches have found increased utility as computer elements where they are used to direct fluid to selected transmission channels. In turn, the presence of fluid flow or pressure in a particular channel or channels is used to represent data, usually in binary code. However, in many computer applications the slow speed with which the flow of pressurized fluid is transferred from one channel to another is a serious drawback preventing the production of short, sharp pressure pulses.

When the usual mechanical switching devices were employed. their movable control vanes, diaphragms or pistons and linkages seriously hampered high speed switching because of inertia, friction and wear. As a result, fluid switches were developed which eliminated all movable mechanical components. Instead, a fluid stream to be controlled, herein called the "power stream," was guided by directing the flow of one or more low energy streams of identical fluid known as "control streams," usually transversely against the power stream. This method of momentum interchange permitted the use of small, low pressure streams to direct the high energy power stream simply with improved efficiency.

A refinement added to this switching action was that of causing the deflected power stream to lock onto the wall of a particular channel and remain there even though the deflecting control stream was discontinued. One manner of accomplishing "lock on" was to provide evacuated ports along the channel walls to remove decelerated boundary particles before separation occurred, and so maintain smooth flow. Lock on was accomplished another way by providing a cavity or "set back" in the channel wall which produced an advantageous pressure gradient transversely of the power stream. Although this refinement permitted the use of control stream pulses instead of continuous streams, no improvement resulted in the switching speed.

There still existed the necessity for a significant improvement in the switching speed of the fluid switches. This need was especially evident in computer applications where the fluid used was predominately a gas, usually air. Although the control streams were used, pressure pulses had to be produced and the easy compressability of the gas prevented the rapid generation of control pulses. Furthermore, supply and valve apparatus were required for at least some of the control streams, though the power streams were often employed as control streams in subsequently connected fluid switches. The apparatus for generating control streams was often bulky and added to the complexity of the entire system.

Another disadvantage of using the conventional control and power streams was that of conveniently coupling an electrical system to the fluid system. Coupling was usually accomplished with the use of electrically controlled valves. Valve-controlled fluid systems were extremely slow when compared to electrical systems, and the electrical control data generated by the latter system had to be either produced at a slow rate or temporarily stored while the electrical signals were used to operate the valves in the fluid system. It was desirable, therefore, to improve the operation of electro-fluid system by decreasing the response time of the fluid system to short electrical pulses.

Accordingly, a primary object of this invention is to provide a fluid switch having increased switching speed.

Another object of this invention is to provide apparatus for directing the flow of the fluid from one channel to another by the generation of shock and pressure waves adjacent the fluid stream.

Another object of this invention is to provide fluid switching apparatus in which a stream of fluid is switched from one transmission channel to another by electrical discharge.

A further object of this invention is to provide reliable, compact control apparatus for a fluid switching device.

In accordance with the foregoing objects, the switching of fluid power streams is accomplished by providing electrical discharge means adjacent the directed stream issuing from a nozzle means. The discharge means are capable of being controlled selectively to discharge and produce a spark. The sudden high energy discharge produces momentary shock and pressure waves to divert the power stream in a manner similar to control streams but with increased speed.

This invention is advantageously adaptable for use with boundary layer switching devices having the "lock on" feature, or for use with the momentum interchange type of switch when only temporary deflection of the power stream is necessary. Thus, when the invention is used in conjunction with a suitable type of fluid switch, sharp pressure pulses of various durations may be produced in a transmission channel.

The foregoing and other objects, features and advantages of the invention will be apparent from the following and more particular description of preferred embodiments of the invention, as illustrated in the accompanying drawings.

In the drawings:

FIG. 1 is a combined perspective view of a fluid switch and electrical schematic in accordance with the invention;

FIG. 2 is a plan view of another embodiment of a fluid switch incorporating the invention;

FIG. 3 is a sectional view of the fluid switch shown in FIG. 2 and taken along the line 3—3.

Referring to FIG. 1 there is shown a fluid switch generally designated as **10**. The switch includes a nozzle **11** continuously supplied with pressurized fluid, either gas or liquid such as air or water, from source **12** through suitable connections. The nozzle forms and directs a power stream of fluid adjacent the surface of wall or airfoil **13** toward the target or receiving orifice **14** of a transmission channel **15**. The airfoil surface may be either flat or curved and is placed adjacent the stream to utilize the fluid boundary layer adhesion to more accurately direct the stream to transmission channel **15**. The airfoil is formed with a groove **16** therein located transversely to the stream flow and in which is positioned a pair of spaced electrodes **17** and **18** suitably mounted in insulating supports **19**. The electrodes are placed adjacent the stream and each connected to opposite polarities of a controlled source of potential capable of producing a spark between the electrodes. The electrodes are preferably mounted in a depression so that the fluid stream does not flow directly between them resulting in excessive voltage requirements to produce a spark.

There are several circuits well known in the art which may be selectively controlled to produce a spark between two electrodes. An exemplary circuit is shown connected to electrodes **17** and **18**. In this circuit each electrode

17 and 18 is connected to one end of a secondary winding 20 of a spark coil 21. The primary winding 22 of the coil has one end thereof connected to a negative source of potential at terminal 23 and the other end thereof connected to the collector electrode 24 of a transistor 25. The transistor emitter is connected to ground and the base of the transistor is normally biased to cut-off through a pair of resistors 26 which are, in turn, connected to a source of positive potential at terminal 27. In operation, a negative electrical pulse is applied at a terminal 28 between the two resistors and is of sufficient magnitude to for ward bias transistor 25 causing conduction therein, which supplies electrical current to primary winding 22 of the coil, and induces a high voltage in secondary winding 20 to produce a spark between electrodes 17 and 18. A reversely biased diode 29 is connected between transistor collector 24 and terminal 23 to protect the transistor from the effects of counter E.M.F. when transistor conduction terminates at the end of the control signal at terminal 28.

Displaced upwardly from channel 15 there may be mounted a second transmission channel 30 having a receiving orifice 31. Channels 15 and 30 may be similarly equipped at their exhaust ends with indicating devices such as flapper valves 32 as illustrated, pistons, diaphragms or the like. The channels may also extend directly to to other fluid actuated devices which function in accordance with the presence or absence of fluid flow in the transmission channel. Channel 30 may, of course, be entirely omitted.

In operation, fluid which is either gas or liquid from nozzle 11 flows across airfoil 13 and into orifice 14 of channel 15 to open its flapper valve 32. When the flapper valve is to be closed, for instance, to operate electrical contacts, or a fluid pressure pulse is to be produced in channel 30, a momentary electrical spark is produced across the gap between electrodes 17 and 18. This spark creates shock and pressure waves adjacent the power stream which diverts the power stream upwardly to flow into channel 30 producing a pulse at its flapper valve. As the pressure wave terminates, the power stream returns to airfoil 13 and flows again into channel 15. Thus there may be produced a sharp pressure pulse in either channel 15 or 30.

In FIGS. 2 and 3 there is shown a modification of the fluid switch described above. The modified switch includes face plate 35 and back blate 36 between which are located airfoils 37 and 38, and blade 39. The airfoils and blade are suitably secured between the face and back plates to form a fluid-tight channel 40 having two diverging output channels 41 and 42 branching therefrom. Blade 39 is located so as to bisect channel 40. Each branch channel has a spur channel connected thereto with spur channel 43 connected with channel 41 and spur channel 44 connecting with channel 42. Each spur channel may communicate with subsequent fluid switches or be equipped with indicating devices such as pistons, diaphragms or flapper valves 45 and 46, respectively illustrated. Channels 41 and 42 proper may exhaust into any suitable fluid sink, e.g. the atmosphere.

Each airfoil 37 and 38 has formed therein one or more slots 47 connected to a continuous source of vacuum 48. Also formed in the wall of each airfoil is a recess 50 into which extends a pair 51 or 52 of spaced electrodes supported in plates 35 and 36. For example, electrodes 53 and 54 of pair 51 extend slightly into the recess of airfoil 37 as seen in FIG. 3. The recesses are provided to permit positioning each electrode pair out of the direct flow of the power stream in channel 40. Each pair of electrodes is suitably connected to an independent spark control circuit similar to that shown in FIG. 1, which may be selectively operated to produce a spark between the electrodes. Plates 35 and 36, airfoils 37 and 38 and blade 39 are made of any suitable material which can be conveniently formed. However, a dielectric material is required adjacent the electrodes to prevent shorting out the electrical spark.

In operation the switch is supplied with pressurized fluid from pump 55 suitably connected to the switch to direct fluid between airfoils 37 and 38 to form a power stream in channel 40. Initially, the fluid will be divided between divergent channels 41 and 42 and will exhaust into the atmosphere with slight bleed off into channels 43 and 44. However, one or the other of electrode pairs 51 or 52 is energized from a suitable circuit to produce a spark and divert the power stream from its airfoil. For instance, electrode pair 51 may be energized causing substantially the entire power stream to be diverted into channel 42. When diversion occurs, the static pressure from sink port 56 appears at blade tip 39*a* and cooperates with the vacuum at slot 47 in airfoil 38 so that the diverted stream remains in channel 42. Increased flow occurs also in channel 44 to operate flapper valve 46. Similarly, when the power stream in channel 40 is to be diverted to channel 41, electrode pair 52 is energized which creates a shock and pressure wave on the right side of the stream forcing the stream to be diverted to the left as viewed in FIG. 2 to thereby enter channel 41. The stream, when so diverted, will remain in channel 41 because of static pressure from sink port 57 and the vacuum at slot 47 in airfoil 37 which combined to produce a pressure gradient transversely of the power stream. Thus there is provided a fluid switch capable of responding substantially instantaneously to an electrical signal.

While the invention has been particularly shown and described with reference to preferred embodiments thereof it will be understood by those skilled in the art that changes in form and detail may be made therein without departing from the spirit and scope of the invention.

What is claimed is:

1. Fluid control apparatus to which pressurized fluid is supplied, comprising, in combination:
   (*a*) nozzle means for directing said fluid as a stream toward a target area; and
   (*b*) electrical spark-producing means adjacent said stream for diverting said stream from said target area.

2. Fluid control apparatus to which pressurized fluid is supplied, comprising:
   (*a*) an output channel for said fluid;
   (*b*) means connected to said pressurized fluid for directing said fluid into said channel; and
   (*c*) means for producing an electrical spark adjacent said directed fluid to divert said fluid from said channel.

3. Fluid control apparatus to which pressurized fluid is supplied, comprising:
   (*a*) an output channel for said fluid;
   (*b*) means connected to said pressurized fluid for directing said fluid toward said channel; and
   (*c*) means selectively operable for producing an electrical spark adjacent said directed fluid and diverting said fluid from said channel.

4. A control device for pressurized fluid comprising, in combination:
   (*a*) a pair of transmission channels for said fluid;
   (*b*) a nozzle for directing said fluid toward one of said channels; and
   (*c*) electrical sparking means adjacent said directed fluid for diverting said fluid into said other channel.

5. A control device for pressurized fluid comprising, in combination:
   (*a*) a pair of transmission channels for said fluid;
   (*b*) means for directing said fluid into one of said channels;
   (*c*) wall means interconnecting said directing means and said one channel to maintain said fluid flowing from said directing means to said one channel; and

(*d*) electrical means producing a spark adjacent said directed fluid for redirecting said fluid into the other of said channels.

6. Fluid control apparatus to which pressurized fluid is supplied, comprising:

(*a*) walls defining a chamber;

(*b*) a pair of output channels communicating with said chamber;

(*c*) nozzle means communicating with said chamber for directing said pressurized fluid into said chamber; and

(*d*) electrical spark-producing means selectively operable for diverting said directed fluid into one of said channels.

7. A control device for fluid supplied thereto under pressure, comprising, in combination:

(*a*) a plurality of transmission channels for said fluid;

(*b*) walls defining a chamber communicating with said channels and having a plurality of recesses therein, each said recess corresponding to one of said channels;

(*c*) nozzle means for directing said fluid in said chamber adjacent one of said recesses and into a corresponding channel; and

(*d*) electrical spark-producing means in each said recess selectively operable for diverting said directed fluid from its said channel and recess to another of said channels.

References Cited in the file of this patent

UNITED STATES PATENTS

3,001,539 Hurvitz ---------- Sept. 26, 1961
3,071,154 Cargill ---------- Jan. 1, 1963