Apr. 17, 1923. 1,451,717

H. G. SOMMER

HAND TOOL

Filed May 26, 1921 2 sheets-sheet 1

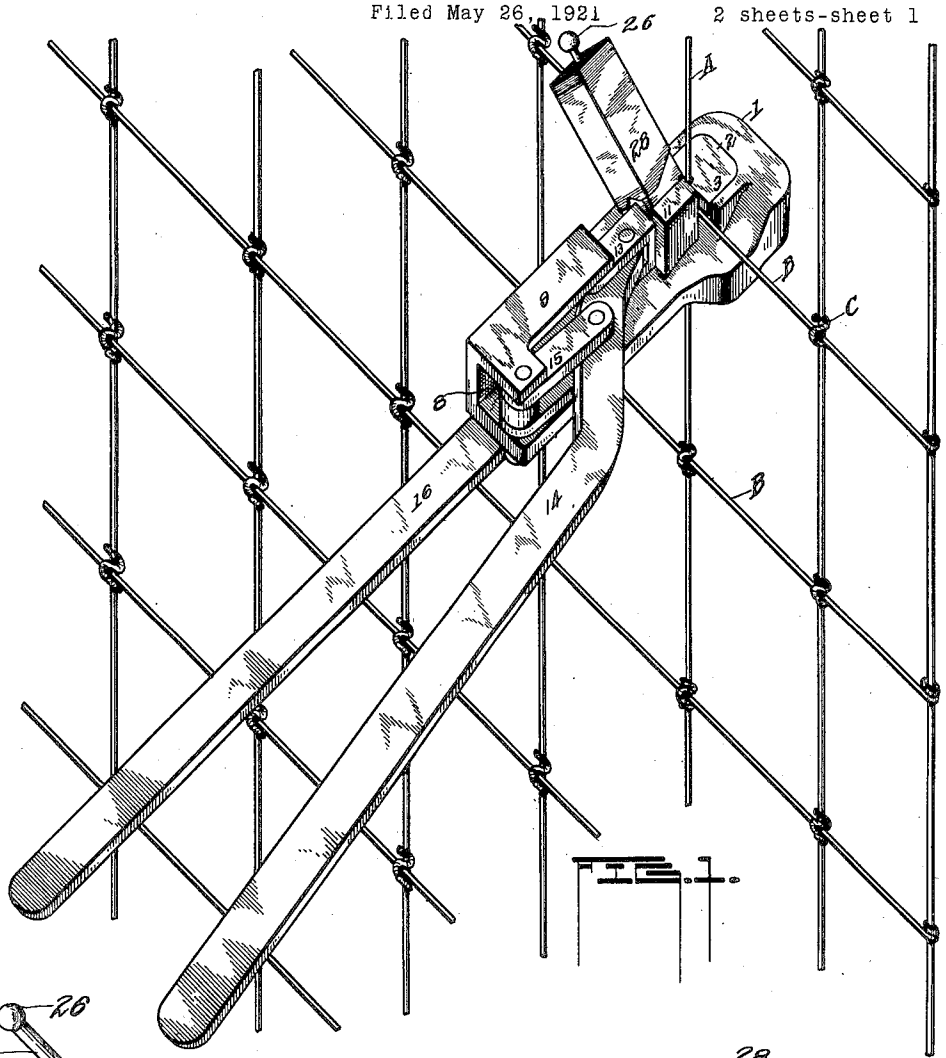

FIG. 1.

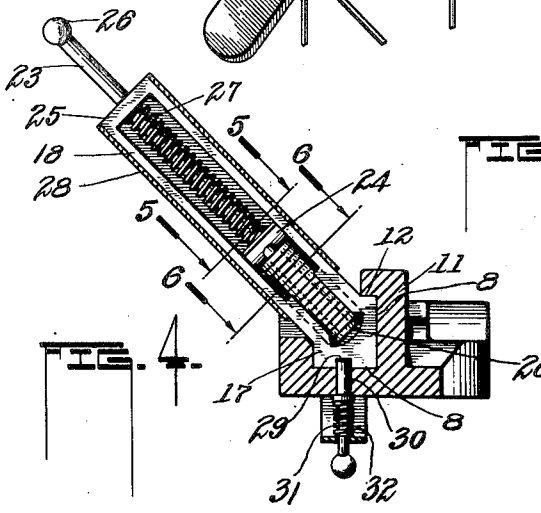

FIG. 4.

FIG. 5.

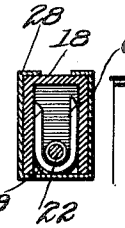

FIG. 6.

INVENTOR.

Henry G. Sommer

Chas. LaPorte

ATT'Y

Apr. 17, 1923. 1,451,717

H. G. SOMMER

HAND TOOL

Filed May 26, 1921 2 sheets-sheet 2

FIG. 6.

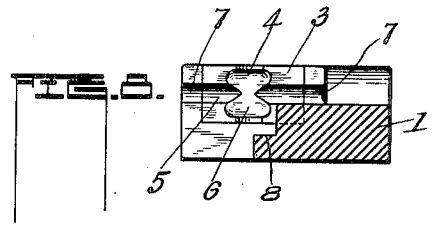

FIG. 2.

FIG. 5.

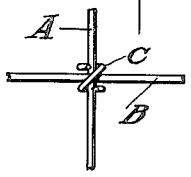

FIG. 3.

FIG. 7.

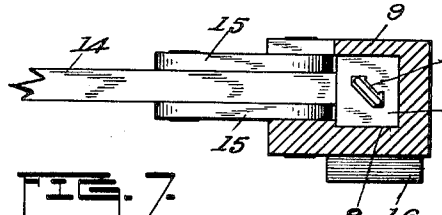

INVENTOR.

Henry G. Sommer

Charles A. Post

ATT'Y

Patented Apr. 17, 1923. 1,451,717

UNITED STATES PATENT OFFICE.

HENRY G. SOMMER, OF PEORIA, ILLINOIS, ASSIGNOR, BY MESNE ASSIGNMENTS, TO KEYSTONE STEEL & WIRE COMPANY, OF PEORIA, ILLINOIS, A CORPORATION OF ILLINOIS.

HAND TOOL.

Application filed May 26, 1921. Serial No. 472,694.

To all whom it may concern:

Be it known that I, HENRY G. SOMMER, a citizen of the United States, residing at Peoria, in the county of Peoria and State of Illinois, have invented new and useful Improvements in Hand Tools, of which the following is a specification.

The invention has reference to a tool for applying staples to strand and stay wires where they intersect for the purpose of securing the same together.

The invention has for a further object to provide a hand tool for applying staples to the strand and stay wire where they intersect, such tool being intended for use in factories where automatic machines are used for making fence fabrics, and is useful for applying staples to the intersections of the strand and stay wires when any one or more of the staple applying mechanisms of the fabricating machine fails to attach a staple for any reason. In addition such a tool would be useful after a fence had been stretched along the field, and it was found some of the attached staples had become dislodged or detached. The tool being used for applying staples for securing the strand and stay wires together.

The invention has for a further object a hand tool for applying staples to the intersections of strand and stay wires which is provided with a die; a magazine for holding staples; a reciprocating plunger adapted to engage and move a staple from the magazine and across the intersection of a strand and stay wire to be clinched thereabout by engagement with the die, and a lever means for reciprocating said plunger.

A further object of the invention is to construct the hand tool in such a manner that it may embrace a strand and a stay wire where they intersect, and to provide a die and plunger mechanism, whereby a staple may be caused to be clinched about the intersection of such strand and stay wire to secure the same together, and the said tool provided with a staple magazine detachable from the tool whereby it may be supplied from time to time with staples, such magazine having a means for automatically positioning the staples to be engaged by the plunger.

That the invention may be more fully understood reference is had to the accompanying drawings forming a part of the description and illustrating a preferred embodiment of the invention, in which;

Figure 1 is a perspective view of a hand tool embodying my invention, the same being shown embracing the intersection of a strand and a stay wire and in the act of applying a staple thereto;

Figure 2 is a plan view of the staple applying end of the tool, partly in section and partly broken away, and showing the parts in the position they would be at the beginning of the operation of the plunger to apply a staple to the strand and stay wire.

Figure 3 is a view somewhat similar to Figure 2, except that the parts are in the position they would be in at the completion of the attachment of a staple to a strand and a stay wire.

Figure 4 is a vertical cross-section as the same would appear if taken on the line 4—4 of Figure 3;

Figure 5 is a detailed cross-section as the same would appear if taken on the line 5—5 of Figure 4;

Figure 6 is a detailed cross-section as the same would appear if taken on the line 6—6 of Figure 4;

Figure 7 is a cross-section as the same would appear if taken on the line 7—7 of Figure 2;

Figure 8 is a cross-section as the same would appear if taken on the line 8—8 of Figure 2, and

Figure 9 is a detailed view of a strand and a stay wire showing a staple applied to their intersection.

Like characters of reference denote corresponding parts thruout the figures.

I desire it understood at the outset that this tool is not intended to be used other than as a repair tool, and as such it is preferably intended to be used by the operator of an automatic fence machine to apply staples to the intersections of strand and stay wires when a miss occurs in any of the staple forming and attaching mechanisms of such machines; altho it may be used in the field when the staples connecting the intersections of the strand and stay wires become detached, for applying others thereto to secure such wires.

In the drawings 1 designates a plate preferably an elongated support, on which is carried the die mechanism; the staple magazine, and the plunger. This plate at its forward end is formed or provided with a die seat 2, to receive a die member 3. The acting face of the die member is formed or provided with the transverse grooves 4 and 5, adapted to receive the stay and strand wires respectively of a fence, and such grooves intersect a suitably formed die seat 6, which when engaged by the points of a staple will direct the ends of the staple about one of the two intersecting wires of the fence, preferably the stay wire. The groove 5 in the die member, when said member is seated in the plate, intersects and coincides with similar grooves 7 in the plate 1, which also receives a strand wire. The plate 1 is formed thruout its length with a channel or guideway 8, in which may have longitudinal movement the staple magazine, and also a block in which the plunger is carried, and at the end of the plate opposite to that to which the die member is secured, is arranged an overhanging shed 9, forming with the channel or guideway 8, a housing in which the plunger block is held and has longitudinal movement. The plate is formed or provided with a transverse notch 10, extending part way into the plate from one side, and said notch is located immediately in front of the die member 3, see Figures 2 and 8, whereby the tool, and particularly the plate, may be caused to straddle a stay wire for the purpose of seating the intersecting stay wire A, and strand wire B, in the grooves 4 and 5 respectively of the die member 3, in the manner shown in Figures 1, 2 and 3. The said plate 1, is also provided at a point slightly in advance of the seat for the die member 3 with a guide-post 11, having an overhanging shed 12, which co-operates with the channel or guideway 8, for supporting and guiding the staple magazine to be described.

The plunger block to which reference has been made, is designated 13, same being reciprocally carried in the housing 9, of the plate 1, in a manner very clearly shown in the drawings, and having a pivotal connection with said block is a hand lever 14, which is pivotally connected with the plate 1, thru and by means of the links 15. A member 16, similar to the hand lever 14, has connected therewith and supports the plate 1 and the staple attaching mechanism. When handling the tool the operator will grip the member 16 with his left hand and the lever 14 with his right hand. In this manner the plate 1, and the operating mechanism thereon is supported and moved to a position so as to straddle the intersection of a strand and stay wire, and to seat the same in the die member 3 in a manner very clearly shown in Figure 1 of the drawings, and by a manipulation of the lever 14 in a manner to be further explained, a staple may be clinched about the intersection of such strand and stay wire.

The staple magazine to which reference has been made, includes a block 17, which, having a rectangular form, may be seated in the channel or guideway 8, of the plate 1 between the forward end of the housing 9, and the post 11, and then slid forwardly until it is beneath and held by the shed 12, of said post 11 as seen in the drawings and particularly in Figures 3 and 4. The staple container for the magazine, and which is designated 18, is disposed preferably at an inclination to the block 17 of said magazine, somewhat as seen in Figure 4. This is for the purpose of feeding the staples in front of the plunger, so that they will lie at an oblique angle, and be fed forward by the plunger to cross the intersection of a strand and stay wire, which are at right-angles to each other, which will result in the ends of the staple being coiled or wrapped concentrically around the stay wire above and below the strand wire when brought into contact with the die seat 6 of the die member 3, best seen in Figure 9. The staple container, as shown in Figures 4, 5 and 6 is preferably U shape in cross-section into which the previously formed staples C may be inserted, and at the lower end of the container the staples are protected from dislodgment by the beading 19. Extending thru the block of the magazine and communicating with the channel therein, which receives the staples, is a transverse opening 20, which in cross-section is of the same contour as the cross-section of the plunger 21, connected to the block 13. The position of the block 17 when secured to the plate 1 being such that the transverse opening 20 in the magazine block is in axial alignment with the plunger 21, so that when the block 13, with the plunger 21 is moved forwardly, said plunger will enter the opening 20 of the magazine block and engage with the arcuate end of a staple C and push it forwardly into contact with the die member 3 and force the ends of the staple about the intersection of the strand and stay wire. Disposed within the channel of the staple magazine are spaced rods 22 and 23. The former passes thru a pressure plate 24, and terminates at the slot 20, extending thru the magazine block 17, see the dotted lines in Figure 4; whereas the rod 23, at its lower end has secured thereto the pressure plate 24. The upper end of the rod 22 is secured in the head 25 of the staple magazine, whereas the rod 23 passes thru said head and has connected thereto a knob 26, forming a finger-hold. Encircling the said rods 22 and 23 are coiled springs 27, which, at their lower ends bear against the pressure plate

24, and at their upper ends bear against the head 25 of the staple magazine. To insert staples into the magazine, the operator, gripping the knob 26 of the rod 23 will pull it outwardly, and in so doing will raise the pressure plate 24 which will slide on the rod 22, such movement compressing the springs 27. This being done the staples C are inserted into the magazine, causing them to straddle the rods 22 and 23, and then drop into the position in which they are very clearly seen in Figures 4, 5 and 6, the pressure plate 24 being held in position against the topmost staple by the springs 27, and as the successive staples are ejected from the magazine thru the action of the plunger 21, the springs 27 acting upon the pressure plate 24 move the successive staples into position to be engaged and fed by the plunger 21. A covering plate 28 is slipped over the magazine to prevent accidental dislodgment of the staples in that portion of the channel of the magazine above the beading 19.

I have stated that the magazine block 17 is seated in the channel or guideway 8, of the plate 1, so as to be moved forwardly beneath the overhanging shed 12 of the post 11, which is the normal position of the staple magazine, prior to the feeding of a staple. The underside of the block 17 is formed or provided with a notch 29, extending therethru for a portion of the width of the block. When the block has been inserted into the channel or guideway 8 of the plate 1, and as it is moved forwardly under the overhanging shed 12 of the post 11, said block passes over a locking-pin 30 with a beveled end, which said pin passes down thru the bottom wall of the plate 1, and is yieldingly held extending upwardly into said channel or guideway 8 by means of a coil spring 31, arranged within a housing 32 thru which the locking-pin is carried, see Figure 4. Said locking-pin is formed or provided with a knob 33, useful as a finger-hold for drawing down the locking-pin when it is desired to remove the staple magazine from the plate 1. The length of the slot 29 in the lower face of the magazine block 17 will determine how far back the magazine may be moved from the die member 3, and it will be understood that such slot may be only sufficiently long to permit the magazine to be moved far enough away from the die member 3, so as to allow the strand and stay wires to be inserted into the slot 10 of the plate 1 to be seated in the die member 3. When in this position, and as the plunger 21 is moved forwardly, said plunger contacting with the arcuate end of a staple C will move the magazine so that the block 17 will come into contact with the strand and stay wire and serve as a clamp against the strand and stay wire to hold it in the grooves of the die member 3 during the time that the plunger is continuing its forward movement and ejecting a staple from the magazine and forcing it about a strand and a stay wire to unite the same together in the manner shown in Figure 9.

The plunger 21 is formed or provided with a concave end 34, providing a seat to receive the arcuate end of a staple C, and said plunger is also provided with a longitudinal groove 35, in what may be termed its upper face, which receives the lower end of the rod 22 in the staple magazine. This arrangement serving to hold the plunger to its work and guiding it during its longitudinal movement when seating and clinching a staple about the intersection of a strand and a stay wire.

It is believed that the foregoing description, together with the drawings, is sufficient without a further description of operation to convey to those skilled in the art, the uses to which the invention may be put, and the manner of its operation for the purpose of attaching staples by hand to the intersections of strands and stay wires when a miss occurs in an automatic machine, or when the fence is stretched on the field and the staples become dislodged.

Reference may be had to United States Letters Patent 1,078,702 issued to J. W. Sommer, deceased, B. L. Sommer, executor November 18, 1913, in which is shown a wire fence machine for automatically making farm and poultry fences, where the stays and strands are joined by staples such as would be used in connection with the foregoing described hand tool.

What I claim is:—

1. In a tool of the character described, in combination, a die, a staple magazine movable toward and from the die and adapted to co-act with the latter to clamp strand and stay wire therebetween, plunger means to evict the staples from said magazine, and force them about the intersections of such strand and stay wires, and manually operable means for actuating said plunger means.

2. In a tool of the character described, in combination, a supporting plate, a die thereon, a staple magazine supported on the plate and adapted to be moved toward the die for clamping strand and stay wires therebetween, a plunger means for evicting the staples from said magazine and force them about the intersections of the strand and stay wires, a hand-hold for supporting said plate, and a manually operable lever for actuating said plunger means.

3. In a tool of the character described, in combination, a supporting plate, a die thereon, a staple magazine reciprocally supported on said plate and detachable therefrom, a plunger means to evict the staples from said

magazine, and gripping means for supporting said plate, certain of which is used for actuating said plunger means, and means for removably locking the magazine on said plate.

4. In a tool of the character described, in combination, a supporting plate, a die thereon, a staple magazine reciprocally supported on said plate to be moved toward and from said die to clamp strand and stay wires therebetween, means for removably locking said magazine on said plate, a plunger means for evicting said staples from said magazine and to force them about the intersections of the strand and stay wires, and hand gripping means for supporting said plate, certain of which is used for actuating said plunger means.

5. In a tool of the character described, in combination, a supporting plate provided with a slot to permit the plate to straddle the intersection of a strand and stay wire, a die on said plate located on one side of said slot, a staple magazine supported on said plate on the opposite side of said slot, a plunger means to evict the staples from said magazine, and hand gripping means for supporting said plate, certain of which is used for actuating said plunger means.

6. In a tool of the character described, in combination, a supporting plate provided with a slot to permit the plate to straddle the intersection of a strand and stay wire, a die supported on said plate on one side of said slot, a staple magazine reciprocally supported on said plate on the opposite side of said slot and adapted to be moved to a position to clamp the intersection of a strand and a stay wire between it and said die, means for removably locking the magazine on said plate, a plunger means to evict the staples from said magazine and to force the same about the intersection of the strand and stay wires, and hand gripping means for supporting said plate, certain of which is used for actuating said plunger means.

7. In a tool of the character described, in combination, a supporting plate provided with a slot to permit the plate to straddle the intersection of strand and stay wires disposed at right-angles to each other, a die supported on said plate on one side of said slot, a staple magazine supported on said plate and with its container inclined at an oblique angle to said plate, whereby the staples when evicted therefrom will be forced obliquely across the intersection of the strand and the stay wire, a plunger means to evict said staples from said magazine, and manually operable means for actuating said plunger means.

8. In a tool of the character described, in combination, a supporting plate provided with a slot to permit the plate to straddle the intersection of a strand and a stay wire and also provided with a longitudinally disposed guideway, an immovable die supported on said plate on one side of said slot, a staple magazine adapted to be removably supported in said guideway and slidable therein to be moved toward the die to clamp the intersection of the strand and stay wire therebetween, a plunger block reciprocally carried in said guideway, a plunger connected with said block and adapted to evict the staples from said magazine and force the same about the intersection of the strand and stay wires, a hand-hold for supporting said plate, and a manually operable lever for actuating said plunger block.

9. In a tool of the character described, in combination, a supporting plate provided with a transversely disposed slot to permit the plate to straddle the intersection of a strand and stay wire and with a longitudinally disposed guideway, a die member immovably supported on one side of said slot, a staple magazine removably supported in said guideway and slidable therein to be moved toward the die to clamp the intersection of a strand and a stay wire therebetween, the containing portion of the said magazine being inclined obliquely to the supporting plate and adapted to deliver the staples in a position to lie obliquely to the strand and stay wire, a pressure means in said magazine for successively positioning the said staples, a plunger block reciprocally carried in said guideway, a plunger connected to said block and adapted to evict said staples from the magazine and to force the same about the intersection of the strand and the stay wire, a hand-hold for supporting said plate and a manually operable lever for actuating said plunger block.

10. In a tool of the character described, in combination, a supporting plate provided with a slot to permit the plate to straddle the intersection of a strand and a stay wire, means for clamping the intersection of said wires, a staple magazine and manually operable means to evict the staples from said magazine and to force the same about the intersection of the strand and the stay wires.

11. In a tool of the character described, in combination, a supported plate provided with a slot to permit the plate to straddle the intersection of a strand and a stay wire, means on said plate to clamp such wires, such clamping means including a movable element, a staple magazine associated with the movable element of said clamping means and manually operable means for moving said clamping element to wire engaging position and to simultaneously evict a staple from the magazine and to force the same about the intersection of said wires.

12. In a tool of the character described, in combination, a supporting plate, a die

thereon, a staple magazine removably supported on said plate, a reciprocally supported plunger to evict the staples from said magazine and force the same about the intersections of strand and stay wires, said plunger provided with a longitudinal groove, manually operable means for actuating said plunger and staple pressure and guiding means in said magazine, the same including an element adapted to enter the groove in said plunger and guide the latter in its movement.

HENRY G. SOMMER.