Jan. 26, 1943. R. A. OLSAR 2,309,354

COMBINED SCREEN AND VENTILATOR

Filed June 21, 1939 2 Sheets-Sheet 1

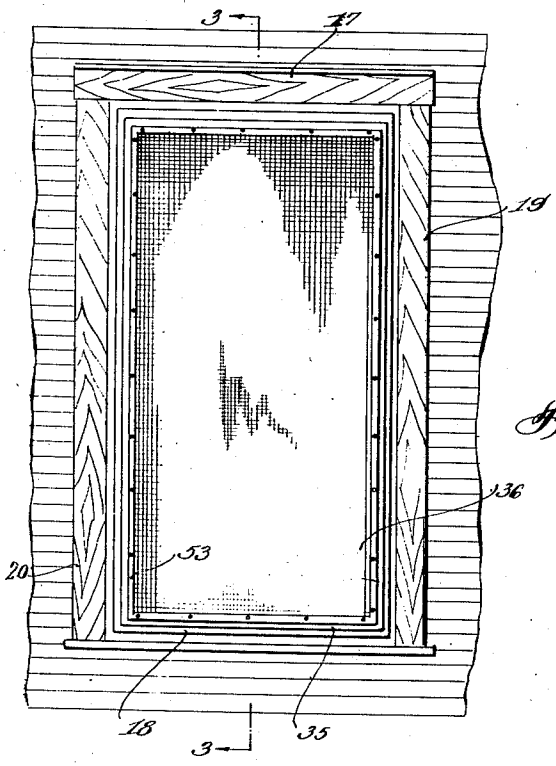

Fig. 1.

Fig. 8.

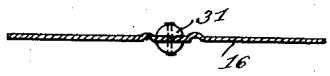

Fig. 9

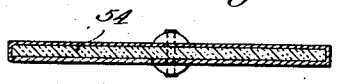

Fig. 2.

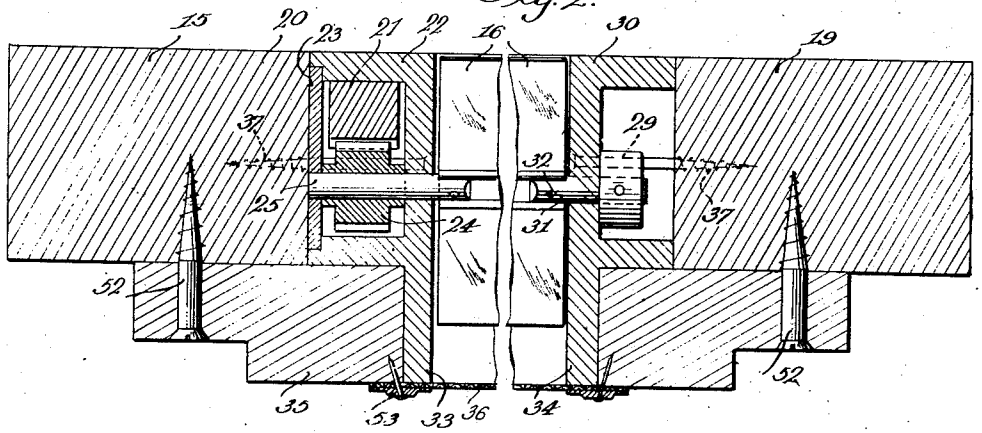

Rudolph A. Olsar
INVENTOR

BY Victor J. Evans & Co.
ATTORNEYS

Jan. 26, 1943. R. A. OLSAR 2,309,354

COMBINED SCREEN AND VENTILATOR

Filed June 21, 1939 2 Sheets-Sheet 2

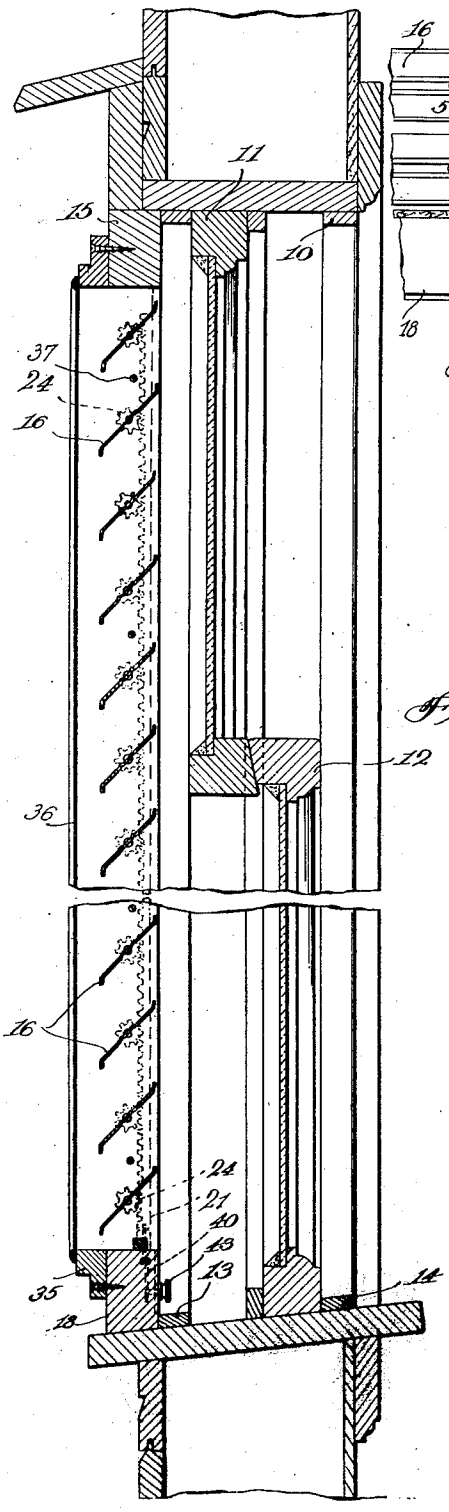

Fig. 3.

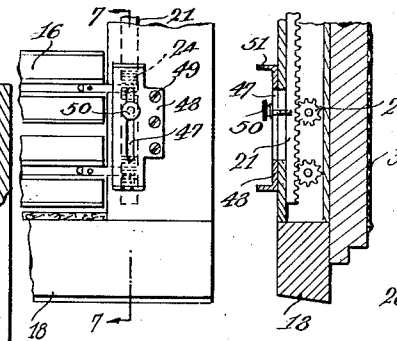

Fig. 6.

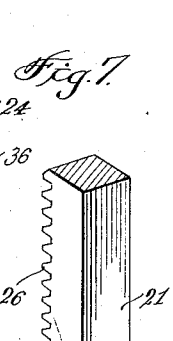

Fig. 7.

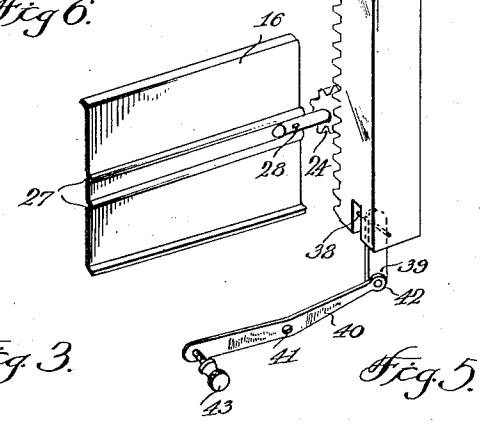

Fig. 5.

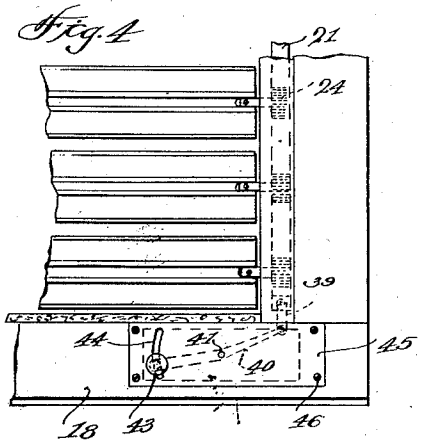

Fig. 4.

Rudolph A. Olsar
INVENTOR

BY Victor J. Evans & Co.
ATTORNEYS

Patented Jan. 26, 1943

2,309,354

UNITED STATES PATENT OFFICE

2,309,354

COMBINED SCREEN AND VENTILATOR

Rudolph A. Olsar, Chicago, Ill.

Application June 21, 1939, Serial No. 280,418

1 Claim. (Cl. 20—62)

The present invention relates to a novel construction in a combined screen and ventilator.

An important object of the invention resides in the provision of a combined screen and ventilator adapted to be disposed in a window frame on the outside of a dwelling with means being provided for adjusting the ventilator to control the temperature of a room within the dwelling.

A further object of the invention resides in the provision of a structure of the above character that will in a large measure preclude the entrance of various insects while at the same time permit controlled ventilation of the dwelling.

A still further object of the invention resides in the provision of a ventilator embodying the use of a multiplicity of louver-like shutters adapted to be simultaneously controlled for proper ventilation while excluding the admission of rain, snow, and the like.

The invention will be fully and comprehensively understood from a consideration of the following detailed description when read in connection with the accompanying drawings which form a part of the application.

In the drawings:

Figure 1 is a front elevational view of a portion of a dwelling embodying the use of the combined screen and ventilator.

Figure 2 is a partial transverse sectional view through the screen and ventilator.

Figure 3 is a vertical sectional view taken substantially on line 3—3 of Figure 1.

Figure 4 is a fragmentary front elevational view of the screen and ventilator illustrating one means for actuating the ventilators.

Figure 5 is a fragmentary exploded perspective view of the means shown in Figure 4 for actuating the ventilators.

Figure 6 is a view similar to Figure 4 of a modified form of ventilator actuating means.

Figure 7 is a detail sectional view of the modified means shown in Figure 6.

Figure 8 is a sectional view of one of the ventilators, and

Fiugre 9 is a sectional view of a modified form of ventilator.

Referring to the drawings for a more detailed description thereof and particularly Figures 1 to 5 inclusive, the numeral 10 designates generally the frame of a window in which is disposed an upper and lower sash 11 and 12, respectively. The upper and lower sashes 11 and 12, respectively, are slidably held within guideways 13 and 14, respectively and adjacent the guideway 13 there is disposed the rectangular-shaped frame 15 supporting a multiplicity of ventilators 16 and the means for actuating the same to be hereinafter described. It will be noted that the frame 15 is supported in spaced relation relative to the sashes 11 and 12, respectively, with the ventilators 16 in the form of louvers adapted to be actuated for controlling the admission of air and light into the dwelling.

The frame 15 comprises end members 17 and 18, respectively and side members 19 and 20, respectively. A rack bar 21 is supported within a casing 22 attached to the inner face of the side member 20, said casing being formed with an opening extending throughout its length for receiving said rack bar, as more clearly shown in Figure 2 of the drawings. A plate 23 is attached to the inner face of the side member 20 and forms a part of the casing 22. A series of pinion gears 24 are supported on individual shafts 25, the shafts 25 supporting one side of the louvers 16 with the teeth of the gears in mesh with the teeth 26 formed on the rack bar 21. As more clearly shown in Figure 5 of the drawings, each of the louvers 16 is formed with a central ribbed section 27 to which the shafts 25 are secured by means of rivets or the like 28. The crimped or ribbed portion 27 facilitates the installation of the structure. The opposite side of each louver is supported within a bearing 29 which bearing is free to rotate within a casing 30 secured to the inner face of the opposite side member 19 as shown in Figure 2 of the drawings. The bearing 29 includes a shaft 31 attached to the opposite side of the louver by means of a rivet or the like 32. The casings 22 and 30, respectively, are formed with projecting portions 33 and 34, respectively, against which the frame 35 of the screen 36 is disposed. The casings 22 and 30 are secured to their respective side members by screws or the like 37.

The arrangement of the louvers, the rack bar and the pinion gears is clearly shown in Figure 3 of the drawings and it will be understood that a means has been provided for simultaneously actuating the louvers, the preferred form of which is more clearly shown in Figures 4 and 5 of the drawings. The lower end of the rack bar 21 is notched as indicated at 38 for pivotally receiving the link 39. A lever 40 pivotally supported intermediate its ends at 41 within a recessed portion formed in the lower rail 18 of the frame 15 has one end connected to the link 39 at 42. The other end of the lever 40 supports a locking bolt 43 which projects through an ar-

cuate-shaped slot 44 formed in the concealing plate 45. The plate 45 is secured by means 46 to the lower rail of the frame concealing the lever and its associated parts. As is to be understood, the locking bolt 43 forms the means of actuating the lever about its pivot 41 for reciprocating the rack bar 21 for adjusting the position of the louvers 16 and vertical movement of said rack bar causes rotation of the respective gears 24 for opening and closing the louvers 16 and when properly adjusted will be retained in that position by tightening the bolt 43 against the plate 45.

The modified form of actuating means is shown in Figures 6 and 7 of the drawings and it will be noted that the inner face of the casing 22 has been grooved as shown at 47 over which is disposed a plate 48 attached by means 49. A threaded bolt 50 extends through the casing 22 into engagement with the rack bar 21 so that vertical movement of the bolt 50 within the limits of the slot 47 will reciprocate the rack bar effecting rotation of the pinion gears for simultaneously actuating the louvers 16. The upper and lower ends of the plate 48 are formed with flanged portions 51 forming finger-engaging portions for facilitating actuation of the bolt 50. The louver actuating means of both forms of the invention is accessible for operation from the interior of the dwelling.

The screen frame 35 is secured to the ventilator frame 15 by means of screws or similar fastening elements 52, said frame supporting a wire mesh material 36, the same being attached thereto by a moulding 53. It is to be understood that the ventilator frame and screen frames are united in such a manner as to form a unitary construction which permits the entire unit to be readily positioned and removed from a window frame.

The longitudinal edges of the louvers 16 may be oppositely curved as shown in Figure 5 of the drawings or said louvers may be formed with straight edges as shown in Figure 8 of the drawings. If desired, however, a louver of the type shown in Figure 9 may be employed, the same comprising a hollow rectangular-shaped structure adapted to be filled with an insulating material 54 so that when the louvers are in a vertical or closed position the interior of the dwelling will be suitably insulated against the entrance of heat.

Also it will be understood, of course, by those skilled in the art that variations in the hereinabove described device involving the substitution of substantial equivalents for the devices described are intended to be comprehended within the spirit of the present invention and that the invention is capable of extended application and is not confined to the exact showing of the drawings nor to the precise construction described and, therefore, such changes and modifications may be made therein as do not affect the spirit of the invention nor exceed the scope thereof as expressed in the appended claim.

What is claimed is:

A ventilator for windows, comprising a rectangular frame adapted to fit within the window frame, the vertical side bars of U-shape in cross section with their free ends engaging the window frame, a series of louvers mounted between said bars and having their shafts passing through the closed inner faces of the bars, pinions mounted on shafts of each louver within one of said side bars, a rack vertically movable in said side bar and engaging the pinions, a link pivotally connected to the lower end of the rack, a lever pivoted in the lower end of the frame and pivotally connected to the link, a handle attached to the free end of the lever, and enlarged disc shaped bearing members carried by the opposite ends of each of the shafts within the other side bar, whereby the shafts of the louvers are held against longitudinal movement in both directions by the pinions and the disc shaped bearings.

RUDOLPH A. OLSAR.