Jan. 29, 1929. 1,700,411

R. P. KING

FUEL ECONOMIZER

Filed April 9, 1927 2 Sheets-Sheet 1

Fig.1

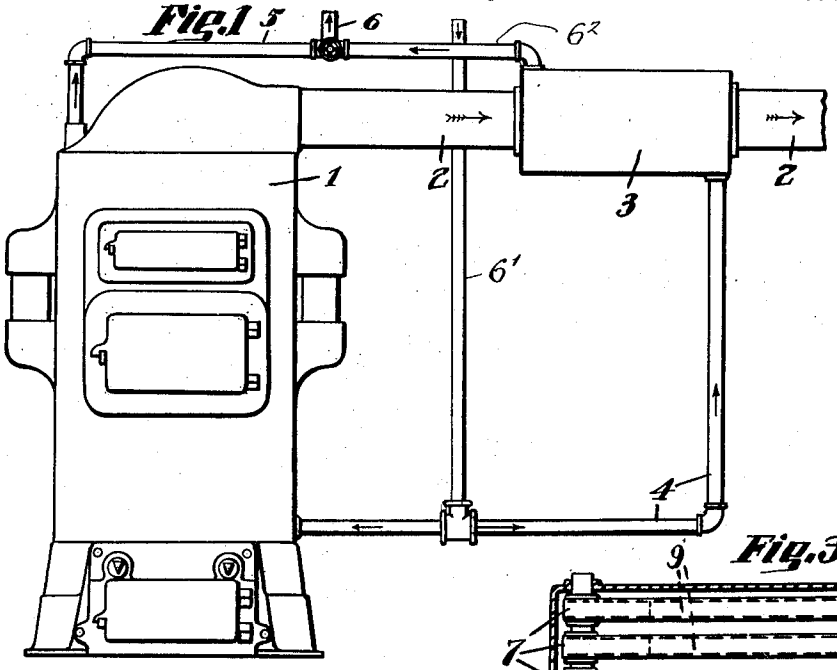

Fig.3

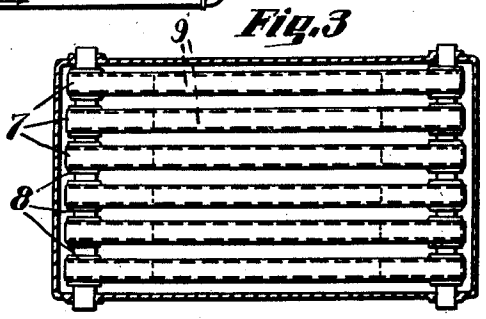

Fig.2

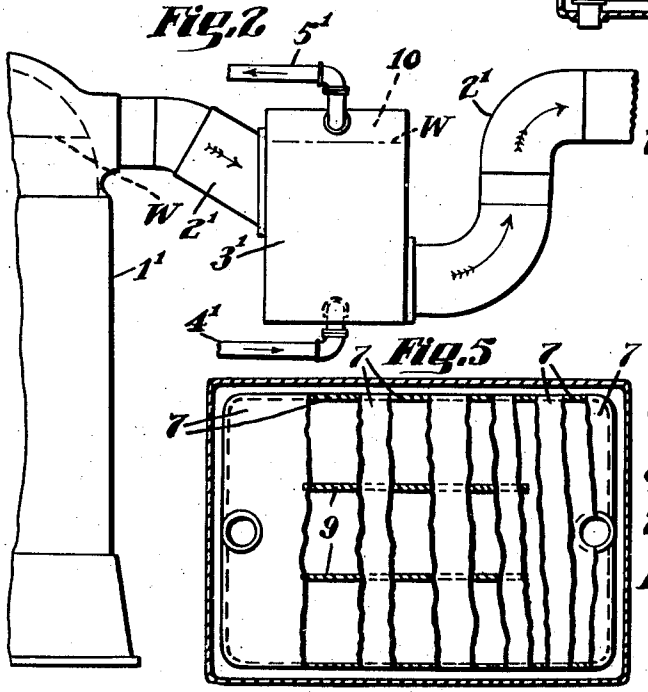

Fig.4

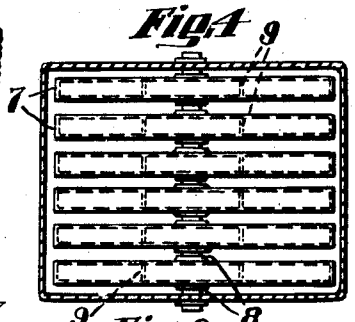

Fig.5

Fig.6

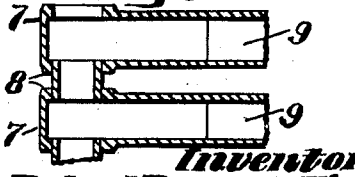

Inventor
Robert Parsons King

By Ellis Spear Jr.
Attorney

Jan. 29, 1929. 1,700,411

R. P. KING

FUEL ECONOMIZER

Filed April 9, 1927 2 Sheets-Sheet 2

Fig. 7

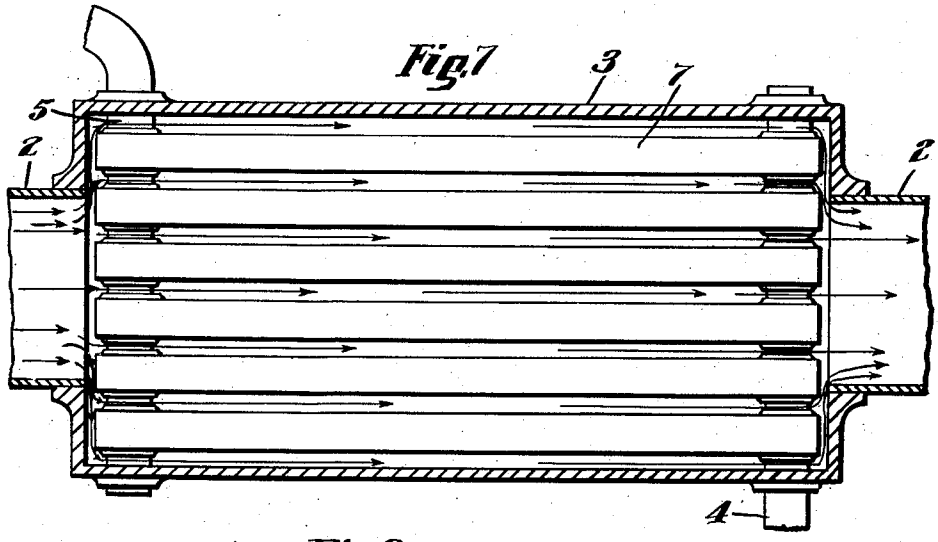

Fig. 8

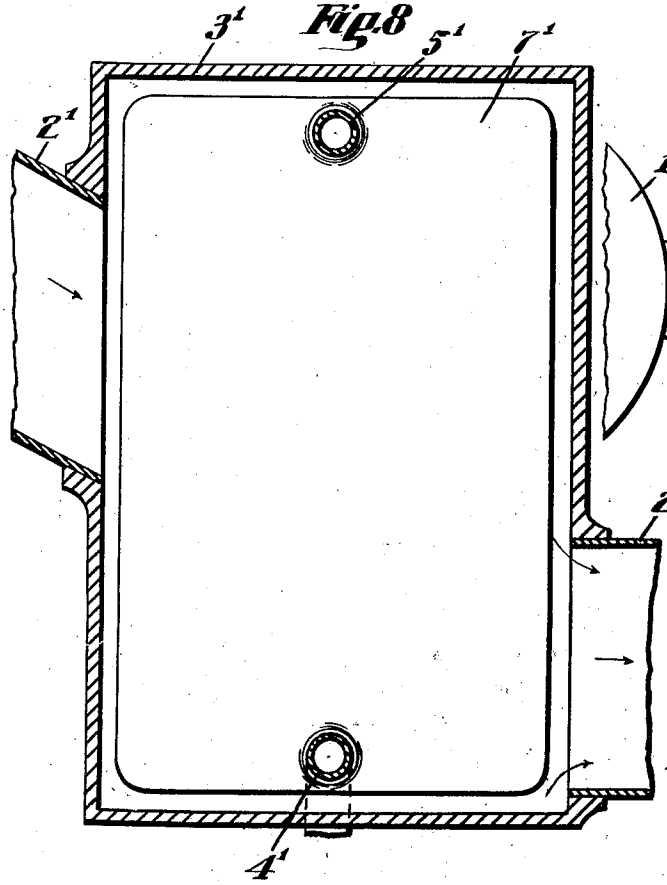

Fig. 9

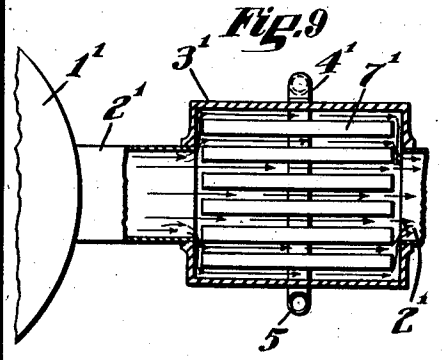

Inventor
Robert Parsons King

By Ellis Spear Jr.
Attorney

Patented Jan. 29, 1929. 1,700,411

UNITED STATES PATENT OFFICE.

ROBERT PARSONS KING, OF ELLSWORTH, MAINE, ASSIGNOR TO FREEFUEL HEATER COMPANY, OF PORTLAND, MAINE, A CORPORATION OF MAINE.

FUEL ECONOMIZER.

Application filed April 9, 1927. Serial No. 182,315.

The ordinary heater, whether steam, hot water, vapor or hot air, is of low efficiency as compared with the inherent possibilities for maximum heating effect. This is due mainly to the fact that most of the hot gases and products of combustion are allowed to escape along the flue connection without delivering up their full heating values. This waste is particularly true of those heaters which are equipped with oil burner units which require an increased draft, the effect of which is to blow the hot gases through the flue connection before they have had an opportunity of delivering up their full heating effect.

Various economizers have been devised for utilizing the waste heat passing through the flue connection, but in general such prior constructions have been expensive of design and installation and have not been adaptable interchangeably to the various types of heat plants. This has required that the economizers be made in various sizes for different installations and in various types for different types of heating plants.

In general, also, such prior art constructions have all involved the interposition of a steam coil or radiator in or adjacent to the flue connection. This necessitates the service of a steam fitter in installing the economizer, and the physical presence of the steam coil or radiator in the flue connection itself tends to obstruct the free passage of the soot and smoke through the flue.

To the end, therefore, of avoiding these objections while at the same time providing a heater which will be sufficient in design and operation and inexpensive to install, I have devised my present invention. According to it, the heater unit is constructed as a chamber disposed about the flue and enclosing a plurality of flat plates or water pockets disposed in spaced parallel relation to each other and interfacially connected to each other.

By this construction, I not only avoid any real obstruction to the passage of soot and smoke through the flue, but I provide a heater which can be installed with considerably less expense and labor than the usual pipe coil or radiator. Moreover, my heater may be used with a hot water heater, steam heater, vapor heater or any other type of heating system having a water line. The requirements of size for any particular type of plant is readily met by the capacity of my heater for indefinite enlargement by simply adding or removing heater plates. In its adaptation to steam heaters, my design avoids the necessity for a common steam chamber or dome for the unit in that with my heater that portion of each individual section above the water line functions as a steam dome itself. This results in a desirable flexibility of the units by eliminating the necessity for manufacturing the units in various sizes to meet varying conditions.

For the purposes of this application, I have illustrated in the accompanying drawings my economizer applied to both hot water and steam heating plants of conventional type. In the drawings:

Fig. 1 shows my economizer mounted in the flue connection of a hot water boiler.

Fig. 2 shows the installation for a steam boiler, and

Fig. 3 is a side elevation of the heating unit shown in Fig. 1, the casing being in section. Fig. 4 is an end elevation of Fig. 3, the casing being in section. Fig. 5 is a plan view of Fig. 3, the casing being in section and the several water pockets being each partially broken away. Fig. 6 is a detail view particularly illustrating the interfacial connection of the individual water pockets shown in Figs. 3, 4, and 5. Fig. 7 is a section of the heater unit shown in Fig. 1 and particularly illustrating the passage of the products of combustion therethrough. Fig. 8 is a view similar to Fig. 7 of the heater unit illustrated in Fig. 2, and Fig. 9 is a plan of Fig. 8.

Referring to Fig. 1, I have indicated at 1 a hot water boiler of conventional type, and at 2 the flue connection to the chimney.

Interposed within the flue connection at any selected point between the boiler and the chimney is a chamber 3 having connection at 4 with the water compartment of the hot water heater and at 5 having a return connection either thereto, or to the risers 6 from the boiler to the radiating system of the plant.

Mounted within the chamber 3 in parallelism to the draft axis of the flue is a plurality of flat heater units 7 in the form of water pockets spacedly connected to each other by interfacial nipples 8, and provided with strengthening ribs 9.

With this construction, the exhaust gases passing through the flue connection from the

boiler are compelled to travel past the heating surfaces presented by the plates 7, heating the water which is circulated through said plates from the intake connection 4 and returning this water in the form of very hot water to the water compartment of the boiler itself, or to the risers from the boiler, thereby mingling with and increasing the heat of the water delivered to the radiating system of the plant. In fact, experiments with this type of heater show that the water delivered by the supplemental heating unit has become heated far more quickly and far hotter than the water in the water compartment surrounding the fire box of the boiler itself. This results in a distinct economy in fuel consumption as well as a more instantaneous delivery of hot water to the circulating system of the heating plant.

In the adaptation for steam boilers, shown in Fig. 2, the steam boiler is indicated at 1^1, the flue connection at 2^1, the chamber of the heating unit at 3^1, the water connection from the water compartment of the steam boiler to the supplemental heating unit at 4^1 and the steam connection from said supplemental heater back to the steam boiler or to the risers at 5^1. The water line of both the steam boiler and the heater unit is marked at W in Fig. 2, and as in the form shown in Fig. 1, the heater plates 7^1 are disposed in spaced parallel relation to each other and are interfacially connected to each other as shown.

With this form, that part of the auxiliary heater above the water line and indicated by the numeral 10 in Fig. 2 functions as a steam chamber or dome within which the steam may expand before its return to the steam dome of the boiler. This results in an increased efficiency of the boiler itself in that the boiler may be more quickly brought to the steaming point.

In the hot water type of Fig. 1, the tendency of the heated gases passing along the flue is to rise and this creates a frictional passage along the underside of each plate due to the fact that the plates are disposed parallel to the draft axis and in a horizontal plane to the heating unit.

In the steam boiler installation shown in Fig. 2, the plates of the heating unit are disposed vertically but none the less in parallelism, so that an individual steam pocket or dome is created for each heating unit or section. This solves the problem of preventing the usual knocking action which results in the steam line due to the inability of the ordinary steam dome of the ordinary steam boiler to take care of the expansion quickly enough.

My heater may be adapted with little or no change of design to various other types of heating plants. Such adaptations and such changes in detail and design as come within the spirit and scope of my invention may all be resorted to within the limits of the appended claims.

What I therefore claim and desire to secure by Letters Patent is:

1. A heating unit for use with a boiler for delivering additional hot water or steam to the radiating system of the heating plant, comprising a chamber adapted to be disposed directly in the flue connection of the boiler, a plurality of flat hollow castings enclosed within said chamber and spaced from each other and from the walls of the chamber and constituting water pockets disposed in parallelism to each other and to the draft axis of the flue connection, said water pockets interfacially connected to each other and connected to the circulating system of the heating plant.

2. A heating unit for use with a boiler for delivering additional hot water or steam to the radiating system of the heating plant, comprising a chamber adapted to be disposed directly in the flue connection of the boiler, a plurality of flat hollow castings enclosed within said chamber and spaced from each other and from the walls of the chamber and constituting water pockets disposed in parallelism to each other and to the draft axis of the flue connection, said water pockets interfacially connected to each other and connected to the circulating system of the heating plant and a plurality of vertically disposed strengthening ribs arranged within each of said pockets and extending longitudinally thereof in spaced parallel relation to each other.

In testimony whereof I affix my signature.

ROBERT PARSONS KING.