Jan. 15, 1957 W. E. GILSON ET AL 2,777,747

ELECTROCARDIOGRAPH

Original Filed May 2, 1950 4 Sheets-Sheet 1

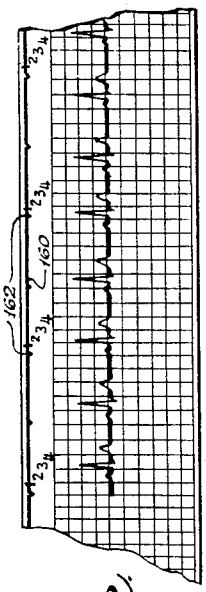

Fig. 2.

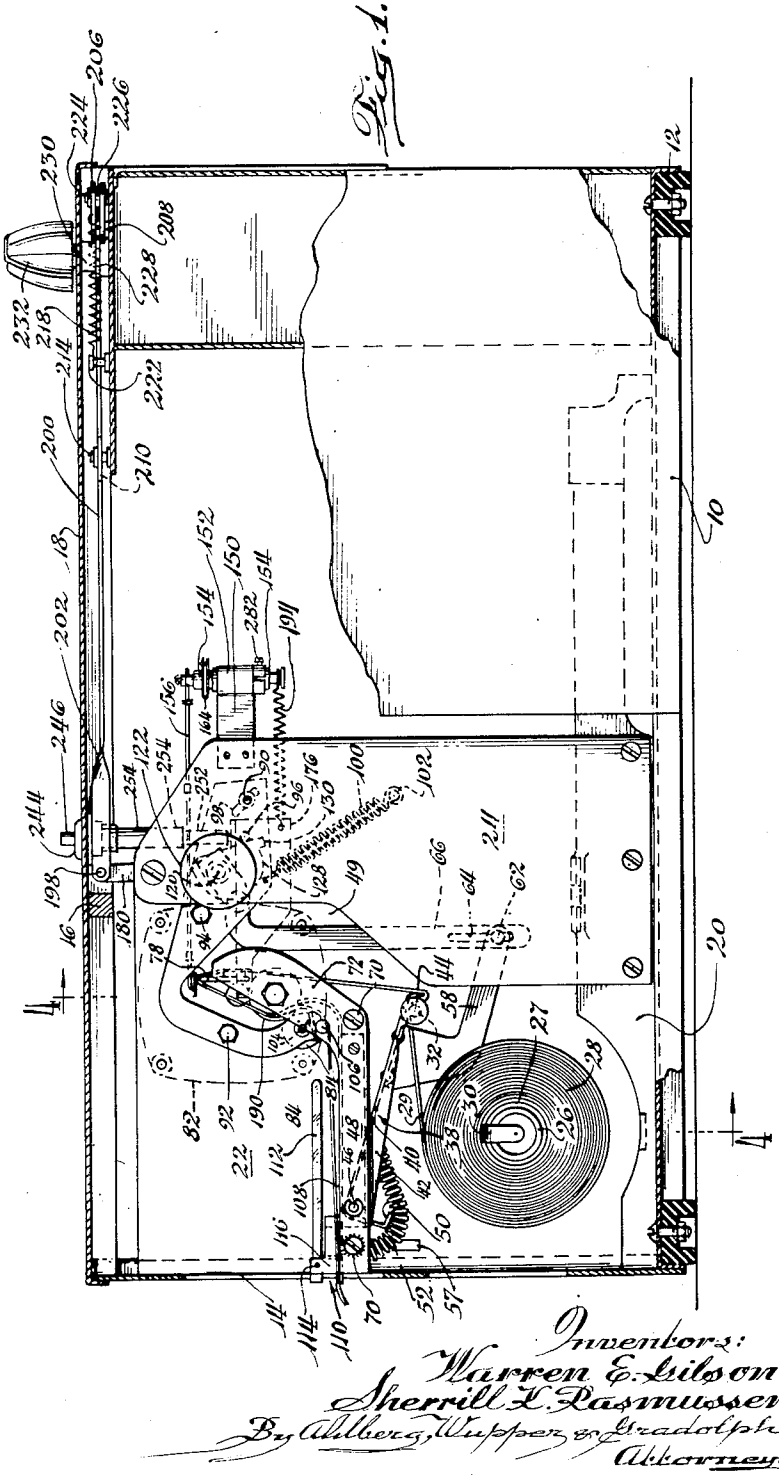

Fig. 1.

Inventors:
Warren E. Gilson
Sherrill L. Rasmussen
By Ahlberg, Wuppen & Gradolph
Attorneys.

Jan. 15, 1957 W. E. GILSON ET AL 2,777,747

ELECTROCARDIOGRAPH

Original Filed May 2, 1950 4 Sheets-Sheet 2

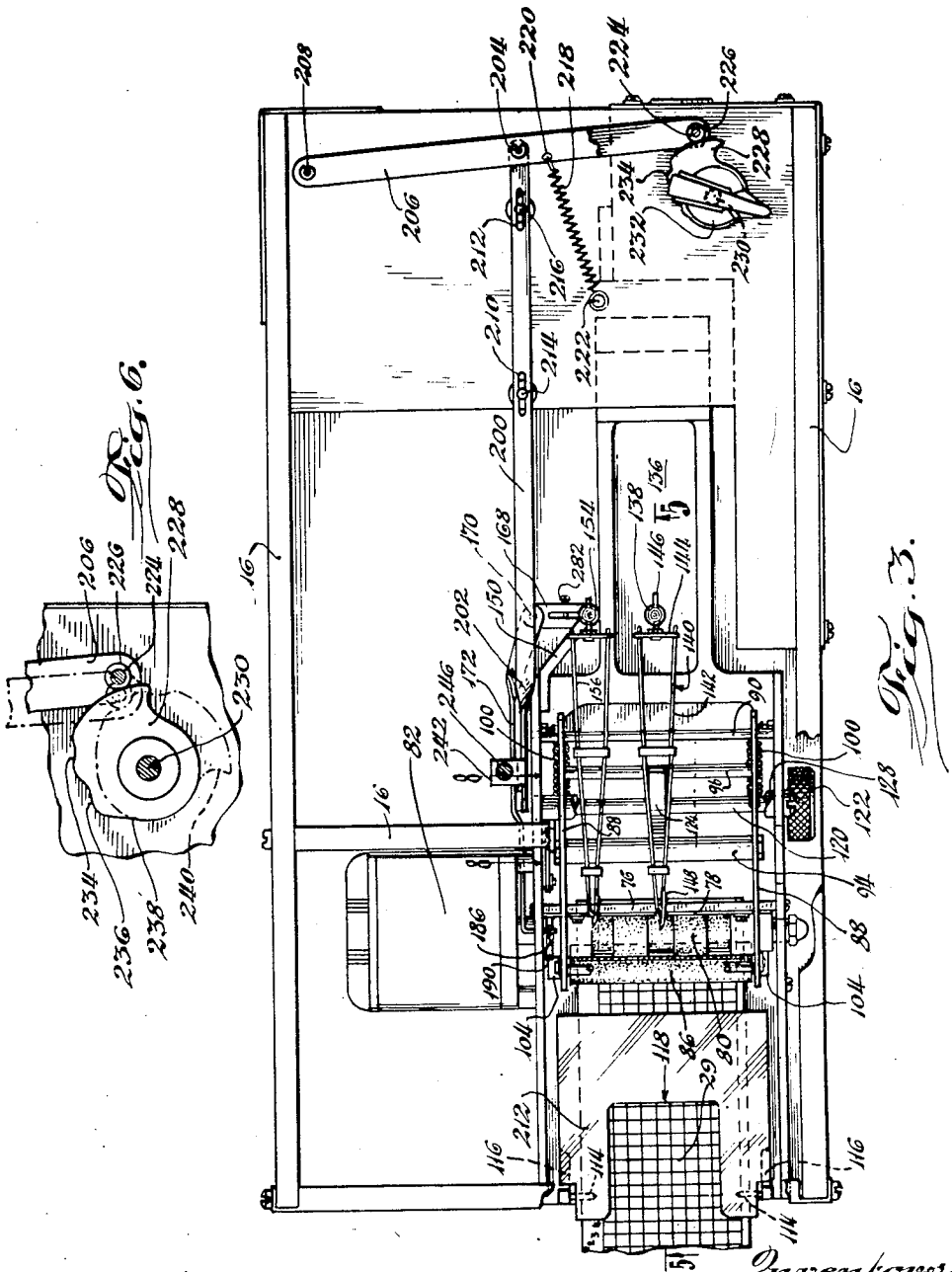

Fig. 6.

Fig. 3.

Inventors:
Warren E. Gilson
Sherrill L. Rasmussen
By Ahlberg, Wuppper & Gradolph
Attorneys

Jan. 15, 1957 W. E. GILSON ET AL 2,777,747

ELECTROCARDIOGRAPH

Original Filed May 2, 1950 4 Sheets-Sheet 3

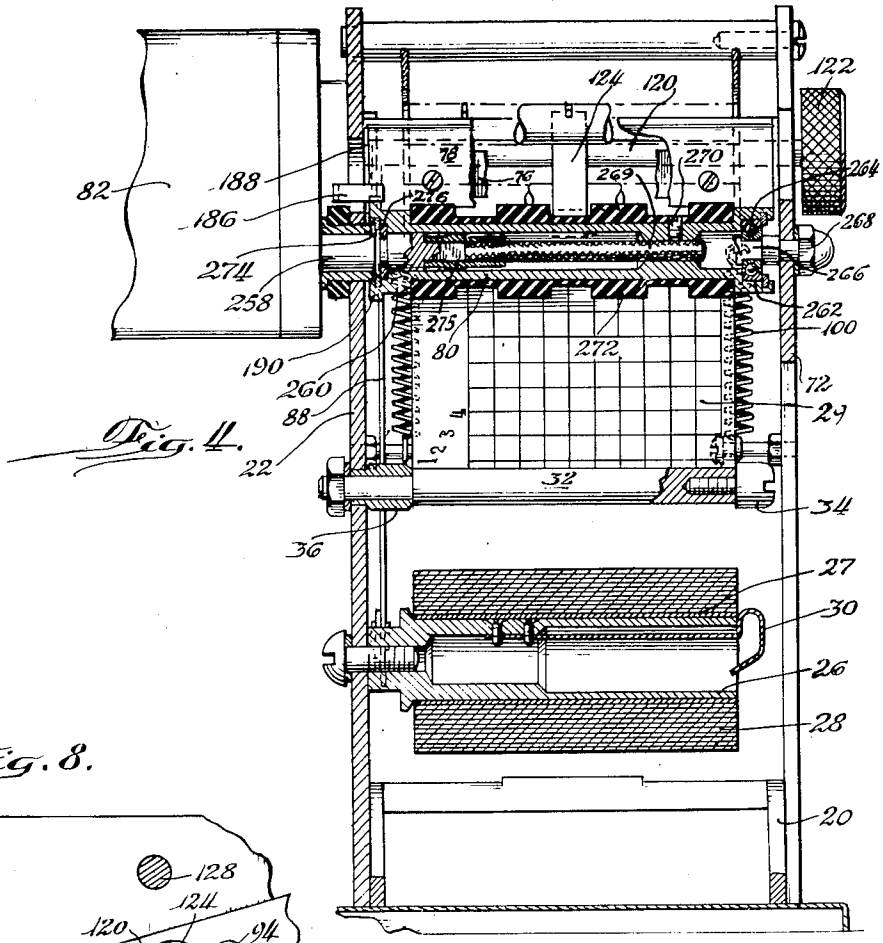

Fig. 4.

Fig. 8.

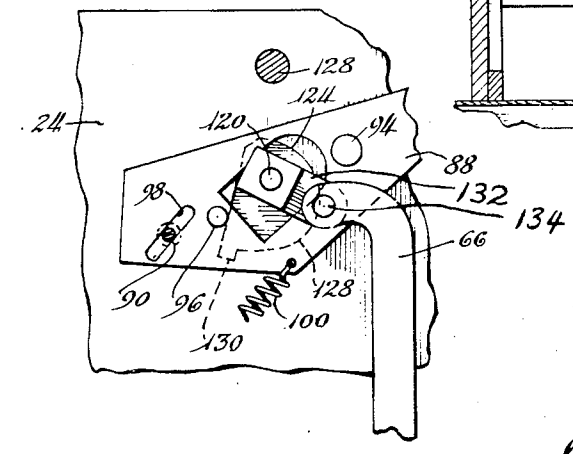

Inventors:
Warren E. Gilson
Sherrill L. Rasmussen
By Ahlberg, Wupper & Gradolph
Attorneys.

ELECTROCARDIOGRAPH

Original Filed May 2, 1950 4 Sheets-Sheet 4

Fig. 5.

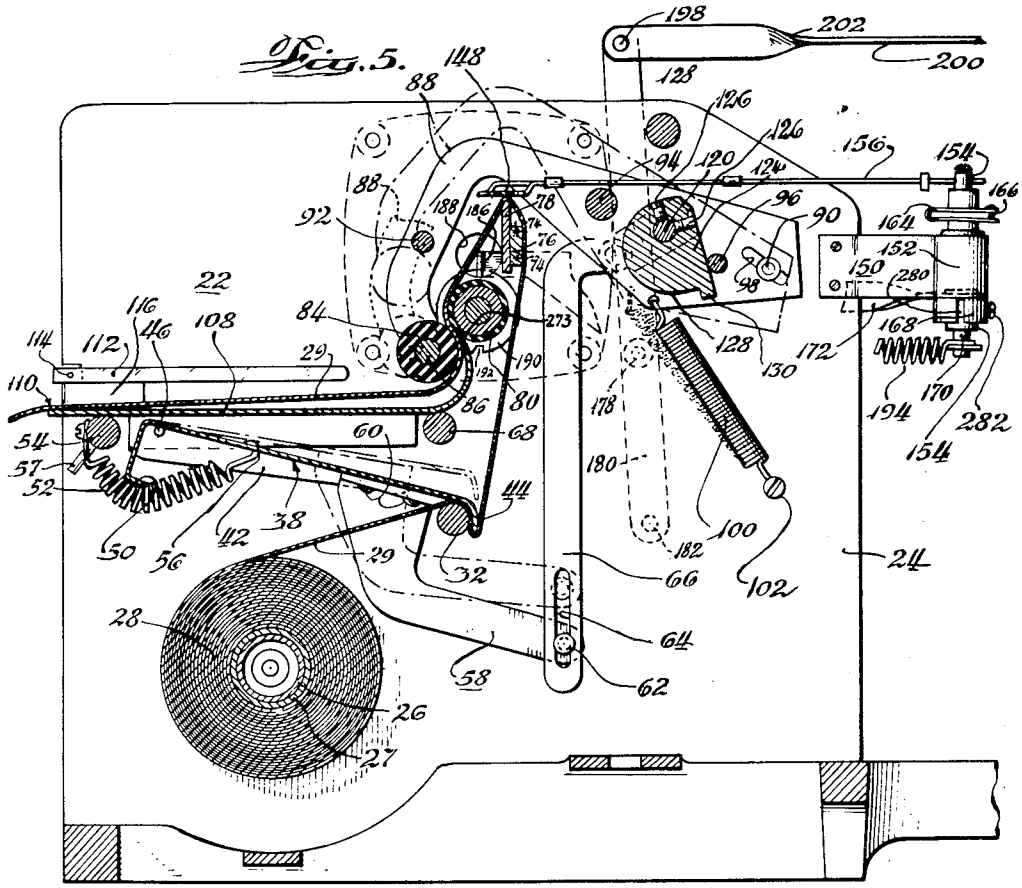

Fig. 7.

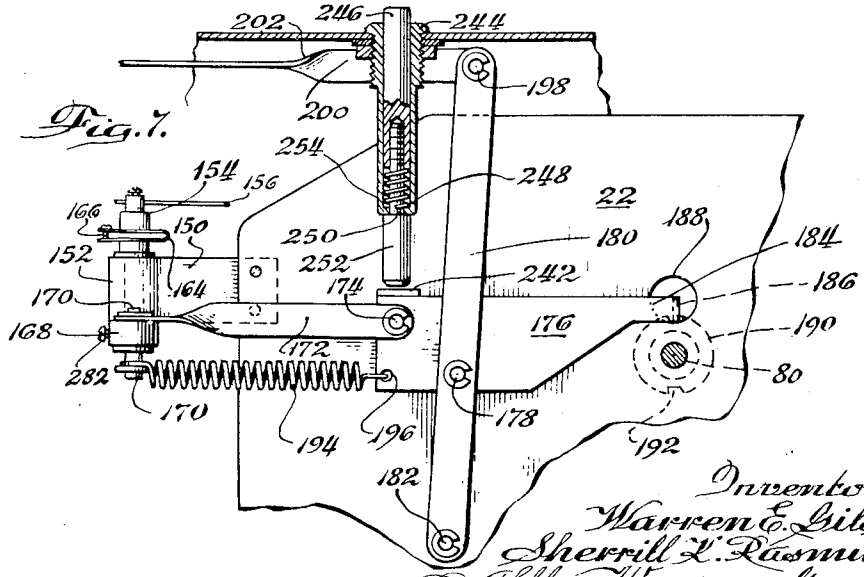

Inventors:
Warren E. Gilson
Sherrill L. Rasmussen
By Ahlberg, Wupper & Bradolph
Attorneys.

United States Patent Office 2,777,747 Patented Jan. 15, 1957

2,777,747

ELECTROCARDIOGRAPH

Warren E. Gilson, Madison, and Sherrill K. Rasmussen, Milton, Wis., assignors to The Burdick Corporation, Milton, Wis., a corporation of Delaware

Original application May 2, 1950, Serial No. 159,608, now Patent No. 2,674,992, dated April 13, 1954. Divided and this application July 31, 1953, Serial No. 371,574

3 Claims. (Cl. 346—136)

The present invention relates to electrocardiographs primarily although certain aspects of the invention may be applied to other devices where similar problems are encountered.

The present application is a division of our application Serial No. 159,608, filed May 2, 1950, for Electrocardiograph, now Patent No. 2,674,992, issued April 13, 1954.

Essentially an electrocardiograph is a heart diagnostic instrument through which a tape is pulled continuously when the device is in operation and upon which tape a curve is drawn to indicate substantially the electric potential changes between different parts of the body due to the heart action.

Essential elements of such a device, therefore, are the tape storing, handling and pulling mechanism, the tape marking device, a high gain amplifying system for actuating the marking device, a plurality of electrodes for attachment to the patient, together with their attendant cables, and a switching arrangement for connecting these cables in different combinations to the amplifier. Most of these components are assembled within a chassis and a case is provided to house the equipment.

One of the objects of the present invention is to provide such an instrument with an improved tape handling mechanism which is particularly advantageous when used with a paper base tape of the type now commonly employed.

Still another object is to provide a novel and convenient tape handling and pulling mechanism which is easy to thread.

Other objects and advantages will become apparent from the following description of a preferred embodiment of our invention which is illustrated in the accompanying drawings, in which:

Fig. 1 is a side view of an electrocardiograph embodying the present invention, the mechanism being removed from the case so as to show its essential structure. In this view portions of the apparatus, such as the amplifier, for instance, have been eliminated since their construction is not essential to an understanding of the present invention;

Fig. 2 is a plan view of a portion of the tape used by and marked in the machine shown in Fig. 1;

Fig. 3 is a top view of the electrocardiograph illustrated in Fig. 1;

Fig. 4 is a vertical transverse sectional view which may be considered as taken substantially along the line 4—4 of Fig. 1 in the direction indicated by the arrows;

Fig. 5 is a longitudinal vertical sectional view which may be considered as taken substantially along the line 5—5 of Fig. 3 in the direction indicated by the arrows;

Fig. 6 is a top fragmentary view drawn to larger scale of a portion of the mechanism illustrated in Fig. 3 so as to show its construction and operation in greater detail;

Fig. 7 is a vertical fractional sectional view of a portion of the mechanism drawn to large scale so as to illustrate a portion of the linkage mechanism for marking certain indicia upon the tape passing through the device; and

Fig. 8 is a detail vertical longitudinal sectional view which may be considered as taken substantially along the line 8—8 of Fig. 1 in the direction indicated by the arrows.

The electrocardiograph which forms the subject of the present invention has its working mechanism largely enclosed within and supported by rectangular generally open framework. It comprises a flanged bottom plate **10** supported upon rubber bumpers or feet **12**. This bottom plate is connected to upstanding sheet metal side members **14** with portions cut out therefrom to reduce weight and to provide openings as needed. At the top the frame is braced by longitudinal and transverse struts **16** and carries a top plate **18**. Since the frame per se is not the subject of the present invention and any suitable frame will do, the specific frame here shown need not be further described.

Within this frame and at one end thereof, the left end as seen in Figs. 1 and 3, there is a separate subframe upon which the galvanometer and tape pulling and handling mechanism is mounted. This subframe is made up of a rigid cast base **20** somewhat less than half the width of the bottom plate **10** which is fastened by screws thereto. The casting **20** carries at one side an upstanding plate **22** about half as long as the chassis at about the middle thereof. This plate is arranged near one end of the frame and extends from top to bottom. It, together with a similar but longitudinally shorter outside plate **24**, bolted to the other side of the subframe **20**, acts to support the tape handling mechanism, as an integrated rigid structure.

A horizontally and transversely disposed tape supporting tube **26** is mounted upon the vertical plate **22** low down and toward the left, as seen in Figure 1. It has an external diameter slightly smaller than the internal diameter of the spool **27** upon which a roll **28** of recording tape **29** is wound so that the spool of tape may be easily slipped over the tube **26**. Once in position it is retained by a spring loaded detent **30** which projects from the end of the tube **26** and snaps upwardly across the end of the tape spool **27**.

From the top of the roll, the paper tape **29** passes rearwardly over a horizontal, transversely disposed pin **32**. This pin projects from and is fixed to the plate **22**. The pin per se is best observed in Fig. 4 where it will be seen that its outward end has a head **34** of a diameter somewhat larger than its stem, while its inner end similarly is provided with a collar or enlargement **36** of approximately the same diameter as the head **34**. The stem portion of the pin **32** between the collar **36** and the head **34** is slightly longer than the width of the paper tape **29** which passes thereover.

The tape is confined against the pin **32** between the head and collar by a keeper or tensioner **38**. This tensioner is made up of a flat plate **40** with portions of its side edges bent over at approximately right angles to form flanges **42** to give it greater stiffness. It rests against the upper surfaces of the head **34** and collar **36** near its right hand end and has this extremity bent downwardly to form a tab **44** which lies just beyond the pin **32**. The paper tape is therefore caused to pass over the pin **32** and thence downwardly around the end of the tab **44**, and thence sharply upwardly in a manner to be pointed out presently in greater detail.

The left hand end of the keeper **40** or more properly these ends of its side flanges **42** are pivoted to a horizontal cross pin **46** which has its ends fixed in the vertical plate **22**, and an L-shaped subframe member **48** which is supported in a manner to be discussed presently. The tensioner **40** is therefore free to pivot upwardly and downwardly about the pin **46**. At its left hand end beyond the cross pin **46** the end portion of the plate **40** is bent downwardly at about right angles and thence to the right to form a transverse spring seat or abutment

59. A pair of side by side coil springs 52 have their left ends fixed to a transverse rod 54 also secured to the vertical plate 22. These springs pass downwardly around the abutment 50 and thence upwardly where their opposite ends 56 are hooked through openings in the plate 40 well beyond the cross pin 45. Since these springs are under tension they will resiliently hold the free end 44 of the paper tensioner 40 against the pin 32. A transverse pin 57 projects from the rod 54 and serves as a handle to rotate the rod 54 to adjust the tension of the springs 52 and hence the paper speed which should be constant with very narrow limits.

An L-shaped sheet metal bracket 58 has one end bent over and secured to the lower surface of the plate 40 as by rivets 60. This bracket extends downwardly in a plane parallel to the backing plate 22 from the tensioner 38 and thence curves toward the right as seen in Fig. 5 into a position somewhat beyond the pin 32, and is provided at its end with a transverse headed pin 62. This headed pin 62 fits a longitudinal slot 64 in a downwardly extending sheet metal arm 66 which is provided for pulling upwardly on the pin 62 so as to lift the end of the arm 58 and thence to raise the tab 44 of the tensioner 38 into a position well above the cross pin 32, the purpose being to facilitate threading of the tape 29 through the tape pulling mechanism as will appear subsequently.

The L-shaped side support bracket 48, previously referred to, is in the same plane as the side plate 24 and may be considered as an extension of this plate with a curved slot 49 formed therebetween. It is disposed with one arm of the L in a generally horizontal position, this portion of the arm being fixed by screws 70 to a pair of parallel transverse rods 54 and 68 which are secured at their opposite ends to the vertical plate 22. The right hand portion of the bracket 48, indicated by the numeral 72, inclines upwardly toward the right and has its upper end secured by a pair of screws 74 to the outward end of a horizontal transversely extending rectangular bar 76 (Figs. 4 and 3) anchored at its inner end to the plate 22. This transverse bar 76 also carries a dull knife edge 78 secured thereto in face to face relation with the thin edge uppermost.

The tape 29 is passed over this edge and thence downwardly around a driving or pulling roller 80 which will be described more specifically subsequently. At present it is sufficient to note that it is journaled to rotate about a horizontal transverse axis which extends between the vertical plate 22 and the bracket 48, and that the rotating axle for the roll 80 passes through the plate 22 where it is connected to the output shaft of an electric motor and speed reducing gear box unit 82 mounted upon the back of the plate 22. This motor is of the synchronous type and drives the roll 80 at a constant speed of 30 revolutions per minute.

The tape is pressed against the driving roll 80 by an idling or clamping roll or roller 84 which is comprised of a layer of soft rubber formed about an axle 86 journaled at its ends in a pair of overhanging arms 88. These arms which are parallel are formed of sheet metal and are spaced apart a distance somewhat greater than the width of the paper tape 29. They extend from the idling roll 84 in a generally left hand direction for a short distance and thence upwardly and toward the right to a position somewhat above the knife edge 78 and thence to the right and downwardly such that their opposite ends are pivoted to a cross pin 90 which extends between the plates 22 and 24. The two generally J-shaped arms 88 are cross braced at intervals to maintain spacing and approximate alignment by means of transverse rods 92, 94 and 96. One of these rods 94, which is spaced somewhat to the right of the top of the knife edge 78, is formed of an electrical insulating material, since it is also used to manipulate a pair of electrically heated styluses and might short circuit the stylus leads were it formed of metal. The construction and arrangement of these styluses will be pointed out presently.

The pivotal connection between the arms 88 and the rod 90 is formed by a pair of slots 98 in the right hand ends of the arms 88 which straddle the rod 90. The slots have a width to fit the rod 90 and a length such that the arms 86 and roller 84 can move backwardly and forwardly as well as pivotally relative to the rod 90. These slots incline upwardly and to the left so that as the right hand ends of the arms 88 slide toward the right, they also move downwardly with respect to the rod 90.

At a point somewhat below and to the left of the rod 90, the arms 88 are connected to the ends of a pair of coil springs 100 which extend downwardly to the right and have their opposite ends attached to screws 102 fixed in the plates 22 and 24. The angle of action of these springs is such as to tend to cause the free ends of the arms 88, that is the ends attached to the idling roll 84, to be swung downwardly and to slide toward the right under the influence of these springs. The extreme lower free ends of the arms 88 below the roll 84 are bent sharply outwardly to form tabs or guides 104 which rest against the sides of a pair of short transverse pins or guides 106 fixed to the plates 22 and 48. The action of these tabs against the pin 106 limits the downward movement of the idling roll 84 such that further action of the springs 100 causes a sliding movement of the arms toward the right, thus squeezing the idling roll 84 against the face of the paper tape opposite the driving roll 80.

It will be noted with reference to Fig. 1 that the orientation of the roller support guides 104 in relation to the roller support arms 88 and to the stationary guides 106 is such that movement of the clamping roller 84 in the vicinity of the pulling roller 80 is constrained to a predetermined direction making a large acute angle relative to a straight line extending through the axes of both rollers. Hence, upon application of a force to the clamping roller 84 in this predetermined direction, the guides 104 and 106 force the clamping roller toward the pulling roller 80 with a wedging action that multiplies the force with which tape is clamped or gripped between the rollers. It is also noteworthy that the lines of action of the springs 100 on the arms 88 make acute angles with the predetermined direction referred to above thus rendering large components of the spring forces available for wedging the clamping roller 84 against the pulling roller 80. Also, the spring produced reaction of the pin 90 on the arm structure defining the slots 98, Fig. 5, is transmitted through the arms 88 to further wedge the clamping roller 84 against the pulling roller 80.

After the tape has passed between the rolls 80 and 84, it crosses a small table 108 supported by the bars 54 and 68 previously referred to which directs the tape to the outside of the machine at 110. The tape is prevented from bunching up on the table 108 by an overlying transparent plastic guard 112 which is hinged at its outward end to pins 114 carried in small brackets 116 fixed to the top of the table 108. Because of this hinge connection the inner end of the guard may be tilted upwardly to facilitate threading the tape thereunder after which it may be pushed down into the position shown in Figs. 5 and 2, for instance. As shown in Fig. 3 the central portion of the guard 112 in the region of its outward end may be cut away as indicated at 118 to permit free insertion of the operator's finger to facilitate alignment of the end of the tape across the table and beneath the guard 112.

This tape handling mechanism insures the tape moving smoothly at proper speed and since the tensioning apparatus works against an intermediate portion of the tape, the tension is not affected by the size of the roll and thus gives more accurate control than is customary.

To the right and slightly below the insulated spacer 94 a shaft 120 extends transversely between the vertical plates 22 and 24. It is journaled in these plates and is provided with a knob 122 at its outward end beyond the

plate 24 by means of which the shaft 120 may be manually rotated. This shaft at about its mid-point carries a cam 124 best seen in Fig. 5 which is secured thereto by means of set screws 126. The cam is in the free position as shown in Fig. 5 with the comming surface 128 out of contact with the spacer 94. This camming surface is generally spiral in form so that as the shaft 120 is rotated in a clockwise direction, the camming surface 128 is brought against the spacer 94 and with continued rotation forces the spacer 94 upwardly and to the left. The extreme end of this camming surface is formed to provide a stop 130 which is brought against the under surface of the spacer 94 and limits the rotational travel of the cam 124.

The angle made with the horizontal by a line through the spacer 94 and the rotatable shaft 120 is less than that made by the spring 100, with the result that when the knob 122 is rotated in a clockwise direction and the cam surface 128 is brought against the spacer 94, further rotation at first causes the arms 88 and roller 84 to be shifted toward the left without the roller being appreciably lifted. This movement is accommodated by the slot 98 which embraces the pin 90. After a predetermined degree of travel of the arms 88 to the left the lower ends of the slots 98 impinge against the pin 90 and further travel of the arms 88 to the left is inhibited. Upon additional rotation of the knob 122 the cam 124 lifts the spacer 94 arcuately, the center of rotation being at the pin 90. When the stop 130 is brought against the spacer 94 the arms 88 have been lifted into the phantom line position shown in Fig. 5. Since the portion of the camming surface 128 immediately adjacent the stop 130 is flat or slightly reentrant with respect to the shaft 120, the cam is locked with the arms 88 in the uppermost position. That is, once the arms have been raised and the stop 130 has been brought against the spacer 94, the spring 100 will not return the arms 88 to their lowermost position. This over-center action of the cam enables the knob 122 to be released after the arms are raised so that both hands can be used for threading the tape through the machine.

It will be seen that the idling roller 84 presses the tape 29 against the driving roll 80 well below its center line, thereby insuring good frictional driving engagement and that the linkage just described automatically insures that simple rotation of the knob 122 in a clockwise direction will shift the idling roll 84 approximately horizontally to the left well clear of the roll 80 before lifting it, thereby preventing binding and scuffing of the tape.

The rock shaft 120 also carries an arm 132 which inclines downwardly and to the left and at its lower end is connected by a pin 134 to the upper end of the link 66 previously referred to.

Thus it will be seen that when the knob 122 is rotated in a clockwise direction so as to cause the cam 124 to lift the roller 84, this rotational movement of the shaft 120 also causes the arm 132 to lift the link 66. After this link has been lifted a short distance the lower end of the slot 64 is brought against the headed pin 62 so that continued rotation of the shaft 120 causes the link 66 to lift the right hand end of the arm 58, thereby lifting the tensioner 38 away from the cross pin 32. In its uppermost position the connection between the arm 132 and link 66 passes the center line of the shaft 120 so that the action of the springs 52 do not tend to reverse the rotation of the knob 122 when it is released. To permit this the upper end of the link 66 is offset somewhat to the right so as to avoid its impinging against the shaft 120.

As best seen in Fig. 3, the right hand end of the base casting 20 supports a galvanometer 136 which is energized by the amplifier circuit of the device. The responsive element of this galvanometer is connected to a rotatable shaft 138 which projects vertically at the top of the galvanometer and is there connected to a stylus, indicated generally by the numeral 140.

This stylus consists of two arms 142 formed of spring wire which in general form a sharply acute triangle with the base ends connected to a transversely extending insulating strip 144. The center of this strip carries a pin 146 which projects to the right and through a transverse hole in the end of the shaft 138 and is there secured by a set screw in the end of the shaft. At the left hand end of the stylus the two arms 142, one of which is a half inch or so longer than the other, are connected to the two ends of a short strip 148 of electrically heated resistance ribbon which is horizontally disposed and rests against the top surface of the knife edge 78. The two arms or wires 142, which are insulated from each other therefore serve both to support the heating element 148 and act as the electrical leads for conducting current through this ribbon. Although it is not shown in the drawings, the right hand ends of the wires 140 are soldered to flexible pigtail leads which are connected to any suitable source of electric power at comparatively low voltage.

These wires or arms 142 lie directly above the insulating spacer 94 which connects the idler roll arms 88. Thus, when the knob 122 is rotated and lifts the arms 88 and spacer 94, this spacer will be brought against the lower surfaces of the wires 142 at a point just behind the resistance ribbon 148. The result is that the ribbon 148 is lifted from the vicinity of the knife edge 78 at the same time that the roller 84 is moved well away from the driving roll 80 and simultaneously with the raising of the tensioner 38 from the cross pin 32.

To load the instrument with tape therefore the roll of tape is inserted with its spool opening over the top of the detent 30 and with the inside end of the roll inclined downwardly. Then as the outer end of the roll is moved downwardly to a horizontal position it depresses the detent 30 and slips easily over the tube 26 with the detent 30 held down by the inner surface of the spool 27. The roll is pushed straight inwardly until the detent 30 snaps upwardly beyond the end of the spool 27. The spool should be inserted so that the tape pays off of the roll from the top in a direction toward the right with the sensitive surface of the tape down.

With the knob 22 rotated as far as it will go in a clockwise direction thereby clearing the tape path through the mechanism, the tape is passed to the right over the pin 32, up through the slot 49, over the upper surface of the knife edge 78, and thence downwardly between the driving roll 80 and the idling roll 84. The end is then passed across the table 108 beneath the guard 112 and out of the machine at 110. To facilitate the latter part of this operation, the guard 112 should be tilted upwardly as previously explained, and the operator's finger should be passed into the tape opening at the left hand edge of the machine into the clearance space provided in the guard 112 at 118. The knob 122 is then rotated in a counterclockwise direction so as to lower the tensioner 38 into position against the pin 32 while simultaneously lowering the ribbon 148 of the stylus 140 against the portion of the tape passing over the knife edge 78. At the same time the idling roll 84 clamps the tape against the driving roll 80. This completes the threading operation.

When the machine is placed in operation the driving roll 80 revolves in a counterclockwise direction thereby pulling the tape from the roll 29 and passing it to the left and across the table 108 and out of the machine. Since the tape 29 is brought over the top of the pin 32 and thence sharply downwardly around the end 44 of the tensioner 38, considerable friction is placed upon the tape at this point. However, as the tensioner 38 is raised, the friction introduced at this point will be less because the tape 29 then will be brought over a smaller portion of the circumference of the pin 32 and will make a less sharp angle between the pin 32 and the lower end 44 of the tensioner. Therefore, by proper adjustment of the tension introduced into the system by the springs 52, any tendency of the tape to resist movement through the machine to too great an extent will be accompanied by a slight lifting of the lower end 44 of the tensioner 38. This

lifting will continue until the amount of tension introduced by the springs **52** is exactly balanced by the amount of drag on the lower end **44** of the tensioner by the tape passing therearound. The resistance of movement of the tape through the machine or in other words, the tension effect which draws it snugly over the top of the knife edge **78** will therefore remain substantially constant even though the spool **28** changes in diameter as the tape is consumed. Further, radical changes in humidity which sometimes affect the characteristics of the tape will have very little effect upon the tension of the tape at the knife edge **78**.

The tape which the specific machine here described is designed for and therefore the type which it is preferred to use is one made of paper having a white surface upon which black markings are made when heat is applied thereto. This tape forms no part of the present invention but is available and usually comprises a paper base which is colored black and upon which an extremely thin heat sensitive white surface is coated. The application of heat breaks down the surface coating and exposes the black background. Inasmuch as the tape is drawn upon by the ribbon of the stylus, which slides back and forth along the area where the tape passes over the knife edge **78**, it will be seen that the arcuate motion of the tip end of the stylus will be converted into a straight line marking transversely of the tape. Although photographic tape or tape which is drawn upon by a pen could be used in a machine of this type, the use of a heat sensitive tape together with the heated stylus has the advantage of providing immediate markings, thus differing from the photographic tape which has to be developed. Also it is less messy and more quickly available for use than a pen and ink arrangement.

The rearward edge of the vertical plate **22** carries a bracket **150** which extends to the right and is offset somewhat toward the tape **29** and at its right hand end has a boss **152** which is drilled vertically to journal a shaft **154**. This vertical shaft may be rotated from side to side and at its upper end carries a second stylus **156** which is exactly similar to the stylus **140**. The ribbon **148** of this stylus also rests upon the portion of the tape passing over the knife edge **48**, but well toward one side thereof so that the markings made by this stylus are in the margin portion of the tape beyond the central zone marked by the stylus **140**. The ribbon **148** of this second stylus may be energized in parallel with the circuit which energizes the stylus **140**.

This second stylus, as will be pointed out in greater detail presently, is for the purpose of indicating to the operator that the tape is not slipping and also which of several sets of leads are connected to the patient. In the furtherance of this marking, the marginal portion of the tape carries numbers from 1 to 4 which define zones spaced successively inwardly from the edge of the tape. This is best seen in Figure 2. An examination of this figure will show a continuous line drawn through the numerals 1 thereby indicating that the main trace on the tape is obtained from the number 1 connection of the electrodes. The mechanism to be described is so arranged as to shift this line **160** automatically so that it passes through the appropriate set of of numerals depending upon the electrode connections. Since there are four sets of numerals, positioning of this line automatically takes care of four different sets of electrode connections. Occasionally still other arrangements are used in making an electrocardiogram and a scheme of coding these additional connections is provided and will be described. In the interest of uniformity, this additional coding is done normally only when the line is in number 4 position.

An examination of the line **160** in Fig. 2 also shows evenly spaced pips **162**. These pips are formed in a manner to be described by linkage to the driven roller **80**, the roller making two pips for each revolution. Since this roller revolves at a rate of 30 R. P. M., it will be seen that the pips are made at the rate of one each second. Therefore, if the pips **162** are evenly spaced on the tape, it indicates that the tape has advanced an equal distance for each second of operation and further, the heart rate may easily be determined from the tape if desired.

The vertical shaft **154** and also the similar shaft **138** projecting from the top of the galvanometer **136** have been described as being connected directly to the stylus. This is a satisfactory arrangement but it requires that the pressure of the stylus ribbon on the tape be adjusted by springing the wires **156**. In the interest of convenience in adjustment, the stylus is connected in each instance to the shaft in the following manner. By reference to Figure 5 it will be seen that the upper end of the shaft **154** above the boss **152** is divided with the two adjacent ends of the shaft connected to the two arms of a U-shaped spring metal member **164**. This spring metal U-shaped piece is oriented with the U-bend toward the writing end of the stylus while the two free ends project some distance beyond the shaft **154** in the opposite direction. The two shaft members **154** may be connected to the spring metal member **164** in any suitable manner, such as by swaging.

The lower arm of the spring metal member adjacent its free end is tapped to receive an adjusting screw **166** which extends through an opening in the upper leg of the U-shaped member such that, as the screw **166** is rotated from above with a screwdriver so that the thread advances into the tapped opening in the lower leg, the head of the screw compresses the U-shaped spring metal member thereby tilting the upper shaft portion **154** relative to the lower shaft portion. The effect is to raise or decrease the pressure on the writing end of the stylus. Similarly, backing off the screw lowers the writing end of the stylus and increases its pressure upon the tape.

The lower end of the shaft **154** below the bracket **150** is connected to a lever **168** which extends at approximately right angles to the stylus in a direction toward and slightly beyond the vertical partition **22** and at its opposite end is connected by a vertical pin **170** to a link **172**, which extends toward the left behind the partition **22** where it is pivoted by a horizontal pin **174** to a vertical plate **176** at a point near its upper edge. This plate **176** is in turn pivoted by a horizontal pin **178** to a vertical lever **180** at a point below and to the left to the pin **178** as seen in Fig. 5. This and some of the last above described connections are better shown in Fig. 7 in which the left to right orientation is reverse since Fig. 7 shows the back of the plate **22**. Referring further to Fig. 7, the lever **180** extends approximately vertically and has its lower end pivoted by a horizontal pin **182** to the partition **22** some distance below the plate **176**. The extreme right hand end of the plate **176** as seen in Fig. 7 is tapered so as to form a thin extension or strip **184** at its top edge. This extension is bent at right angles to form a tab **186** which extends through an opening **188** in the partition **22** above the motor shaft where its lower edge rides upon a cam **190** fixed to rotate with the driving roll **80**. This cam is circular excepting that it has two oppositely disposed notches **192** which allow the tab **186** to drop momentarily each half revolution of the driving roll **80**. Close following of the cam **190** by the tab **186** is insured by a coil tension spring **194**, one end of which is hooked through a hole **196** in the lower left edge (Fig. 7) of the plate **176** while the other end is looped around the lower end of the vertical pin **170** which connects the lever **168** to the link **172**.

Now if it is assumed that the upper end of the lever **180** is held stationary, thereby fixing the pivot pin **178**, the periodic dipping of the tab **186** will pull upon the link **172**. Since the link **172** is periodically jerked slightly to the right, as seen in Fig. 7, this in turn pulls the end of the lever **168** and rocks the shaft **154** in a counterclockwise direction as seen from above. The ultimate result is to cause the stylus ribbon **148** to be jerked slightly toward the center of the tape momentarily, thereby pro-

ducing the inwardly directed pips **162** previously referred to and illustrated in Fig. 2.

The upper end of the lever **180** is pivoted by a transverse horizontal pin **198** to a link **200** which extends generally horizontally to the right with a quarter twist therein, as seen in Figs. 5, 1 and 3. The quarter twist in this link indicated at **202** is simply for the purpose of having the right hand potrion of the link lie flat horizontally while the left hand portion thereof is in a vertical plane. This link **200** extends almost to the right hand end of the machine and there is pivoted by a pin **204** to the mid-point of a horizontal lever **206**, one end of which is pivoted to a vertical pin **208** fixed to one of the chassis members nears the back thereof. In order to insure proper guidance for the link **202**, it is provided with two longitudinal slots **210** and **212** spaced well apart which slip over vertical pins **214** and **216**, respectively. This is best shown in Fig. 3. The outer end of the lever **206**, that is the end toward the front of the case, is pulled toward the left as seen in Fig. 3 by a coil spring **218** hooked through a hole **220** in the lever **206** in a position somewhat forward of the pin **204**. The opposite end of this spring is secured by a screw **222** fixed in the chassis. The tendency therefore is for the lever **206** to be swung in a clockwise direction so as to push the link **200** toward the left.

The extreme forward end of the lever **206** carries a vertical pin **224** with a small roller **226** journaled thereon as may be seen in Fig. 1. This roller presses against the edge of a disc cam **228** disposed to the left thereof and mounted upon the shaft **230** of a rotary tap switch having a knob **232**. This tap switch may be moved to any of a number of positions and when so moved serves to connect the several patient leads in various combinations. The specific switch and circuit for accomplishing this is not shown since it forms no part of the present invention and suitable circuits for this purpose will be apparent to anyone skilled in this art. So far as the present invention is concerned, it may be assumed that the switch, when rotated fully in a clockwise direction, comes against a stop and then when rotated in a clockwise direction, successively snaps to positions in which the patient's leads are connected in combinations simply referred to for convenience as 1, 2, 3, 4 and others beyond 4.

When the above switch is backed off against its stop, the portion of the cam **228** farthest from the switch shaft **230** is brought into contact with the cam following roller **226**. This is the calibrate position. When the tap switch is snapped from the calibrate position to the No. 1 position, the roller **226** still rides upon the portion of the cam **228** farthest from the center of rotation of the shaft **230**. In these two positions, therefore, the end of the lever **206** nearest to the front of the case is as far toward the right as seen in Fig. 3 as it is under any conditions. The link **200** therefore may be considered as being pulled to its farthest right position. By referring to Fig. 7 in which the orientation is reversed, it will be appreciated that the link **200** there shown is pulled farthest to the left and that therefore the upper end of the lever **180** is the farthest to the left of any position it ever assumes. This brings about a general shifting of the plate **176** and link **172** toward the left (Fig. 7) with a consequent rocking of the lever **168** and shaft **163** in a clockwise direction as seen from above, which swings the stylus **156** and ribbon **148** carried thereby to the position shown by the line **160** in Fig. 2; that is with the line drawn nearest to the edge of the tape and so as to pass through numerals 1. This indicates to the operator, therefore, that the patient's electrodes are connected in the No. 1 manner.

When the tap switch **232** is snapped to the No. 2 position, the cam **228** is shifted in a clockwise direction slightly so as to cause the roller **226** to drop against a portion of the cam indicated by the numeral **234** which is closer to the tap switch shaft **230**. This causes the forward end of the shaft **206** to be moved somewhat to the left, as seen in Fig. 3, thereby carrying along with it the link **200** and the linkage connected thereto and just described in connection with the No. 1 position. Ultimately this causes the stylus ribbon **148** to be shifted inwardly somewhat so as to draw its line through the numerals 2. Additional inward steps **236** and **238** on the cam (Fig. 6) permit the cam follower **226** to move inwardly to the No. 3 and No. 4 positions as the rotary tap switch is swung to the No. 3 and No. 4 electrode combinations. This in turn causes the stylus to draw its line through the Nos. 3 or Nos. 4. The shape of the cam **228** is such that beyond the point **238** the cam surface is circular so that as the tap switch is moved beyond the No. 4 position, no movement of the stylus takes place. Conveniently, however, the cam surface can have an abrupt rise at **240** to serve as a stop to limit rotation of the cam when this abrupt rise is brought against the roller **226**.

From the above, it will be seen that the tape is automatically coded for any combination of leads from 1 to 4. Additional coding beyond the No. 4 position is accomplished as follows, it being observed that the stylus position for combinations beyond the No. 4 position is such as to draw the line through the numerals 4. If desired, of course, an additional step on the cam could be used for shifting the stylus into a blank position inwardly of the numerals 4 on the tape although no sufficient advantage in doing this appears to justify such a provision. By referring to Figure 7, it will be seen that the left hand upper end of the plate **176** is provided with a tab **242** which would extend straight upwardly excepting that it is bent over at right angles so as to form a flat horizontal striker surface extending away from the partition **22**. Directly above the striker surface **242** the cover plate of the instrument carries a downward extending tubular member **244** which houses a push rod **246**, a portion of which extends above the upper end of the tubular member **242** to serve as a push button. The push rod **246** is somewhat shorter than the inside length of the tubular member **244**, the lower end of which has an inwardly extending shoulder **248** through which a stem **250**, smaller in diameter than the push rod **246**, extends. Below the shoulder **248** the stem **250** is provided with a head **252** so as to form a second shoulder which is brought against the lower end of the tube **244** by a coil spring **254** housed within the lower portion of the tube. One end of this coil spring bears against the shoulder **248** while the other end presses upwardly against the lower end of the push rod **246** into which the upper end of the stem **250** is threaded. The lower end of the head **252** of the stem **250** is disposed just above the horizontal striker surface **242** at the end of the plate **176**.

This arrangement is such it will be seen that the push rod **242** is normally urged to its uppermost position by spring **254** but when the upper end is depressed, it brings the head **252** against the striker surface **242** and urges it downwardly a short distance, thus rocking the plate **176** in a counterclockwise direction about the pivot pin established by the pin **178**. This pulls the link **172** toward the left as seen in Fig. 7 so as to swing the stylus ribbon **148** toward the margin of the tape shown in Fig. 2. In other words, whereas the notches **192** in the cam **190** rock the plate **176** in a clockwise direction, thereby causing pips **162** which point inwardly on the tape, momentarily depressing the button **246** will similarly cause pips pointing outwardly.

If the operator therefore has taken all of the electrocardiograms that he desires with the electrodes connected in positions 1, 2, 3 and 4 and wishes to take an additional reading with some further combination of electrodes, he simply moves the rotary tap switch beyond the No. 4 position into a position giving a known combination of electrodes which is desired and then codes this particular connection by depressing the button **246** momentarily according to any code of his own choosing. In other words, he

can use one or more short pips combined with one or more long dashes which to him will signify whatever combination of electrodes is being used.

As to details of mechanical construction, it will be seen by referring to Fig. 1 that the lever **206** is comprised of two strips arranged one above the other with the link **200** connected between them. The two links **206** also embrace the two faces of the roller **226** previously mentioned, which is of smaller diameter that the width of the lever **206**. Inasmuch as the cam **228** is somewhat thinner than the roller **226**, a portion of the edge of the cam **228** is overlapped on its top and bottom faces by the edges of the two strips **206**. The roller **226** is therefore prevented from slipping off the face of the cam **228**. Also, the pull upon the end of the link **200** by the pin **204** is in alignment with the center of the roller **226**, inasmuch as the strips **206** lie above and below the link **200** as well as above and below the roller **226**. There is, therefore, no tendency for looseness of either of the pins **204** or **224** to permit deflection or bending of either to the side which could cause the position of the stylus ribbon **148** to give an inaccurate reading.

The driving roll **80** has been generally described and its use in the combination indicated. It may be formed and arranged in any suitable manner but the specific design used in the present apparatus is illustrated in Fig. 4. Here it will be seen that the shaft **258**, which extends from the electric motor and reduction gear drive unit **82**, extends into a sleeve indicated generally by the numeral **260**. This sleeve has a cup-shaped recess **262** in its opposite end to take the outer race of a ball bearing **264**. The inner race of this bearing is fitted to a stem **266**, the outer end of which extends through the front L-shaped bracket **72** and is secured thereto by a nut **268**. The sleeve **260** therefore is supported at its outer end by the ball bearing **262** and stem **266**, while its inner end is piloted upon the motor shaft **258**.

Drive for the sleeve **260** is effected through one or more set screws **270** which extend radially through the sleeve **260** and bear against a flexible shaft **269**. The flexible shaft **269** is crimped to a short length of tubing **275** which is splined to the motor shaft **258**. The result is that even though there is no perfect alignment between the end of the motor shaft and the end of the sleeve **260** carried thereby, nevertheless any weaving at this point will not loosen the driving connection between the sleeve and the motor shaft since the drive is transferred to the sleeve through the flexible shaft **269**. This sleeve is covered by a soft composition rubber coating **272** which forms the driving surface for the tape and this coating is relieved as at **271** over certain circumferential portions of its area in order to permit tabs **273** formed at the end of the table **108** to be curved upwardly in the spaces provided by these relieved areas which prevent the tape passing rearwardly beneath the driving roll rather than across the table where it belongs. The circumference of the extreme inner end of the sleeve **260** is formed to provide the cam surface **190** previously referred to. Longitudinal position of the roller **80** on the shaft **258** is effected by means of a pair of C-shaped split rings **274** and **276** which are in face to face relation, one of these rings being snapped into a groove on the shaft **258**, while the other ring **274** similarly snaps into a groove in a cup-shaped recess in the inner end of the sleeve **260**.

In order to line up the ribbon **148** of the stylus **156** at the proper starting position so that it will trace its line through the appropriate numerals at the margin of the tape, it may be necessary to shift the stylus slightly from side to side to achieve proper positioning. This is facilitated by the connection between the stylus shaft **154** and the lever **168** which has previously been described as connected thereto. The lever **168** is slotted as at **280** from the end with the hole which embraces the shaft **154** almost to the opening at the other end which receives the pin **170**. The portion of the lever **168** which embraces the shaft **154** is therefore springy and forms a light friction fit therewith. The degree of friction between the lever **168** and the shaft **154** is adjusted by a clamping screw **282** which extends transversely through the two arms of the lever at approximately its mid-point. By tightening this screw the two arms embracing the shaft **154** may be squeezed together so as to achieve any degree of friction desired.

Normally the screw will be adjusted until it is tight enough to insure that no relative movement between the stylus shaft and the lever **168** will take place unless the stylus is grasped at a point close to the shaft **154** and twisted with the intention of purposely causing slipping between the shaft **154** and the lever **168**.

Although the operation of the apparatus forming the subject matter of this invention has been described in detail as seemed appropriate along with the description of the various components, a brief general description of its operation will now be given.

When it is desired to place the apparatus in operation the detent **30** is depressed and a roll of tape slipped over the end of the tube **26**. When the roll is in position the detent will snap outwardly and prevent the roll from being withdrawn accidentally. The knob **122** is then rotated in a clockwise direction as far as it will go, thereby moving the idling roll **84** away from the driving roll **80** while simultaneously lifting the styluses **156** and **140** out of the way of the tape path. At this time also the tensioner **38** is raised away from the pin **32**.

When the knob has been rotated all the way in the clockwise direction, it will remain locked in this posiiton. The tape is then led from the roll, over the pin **32**, up through the slot **49**, over the top of the knife edge **78**, down between the driving roll **80** and idling roll **84**, across the table **108**, and out of the machine at **110**. This is done with the guard **112** in raised position. With the tape thus placed, the knob **122** is rotated in the counterclockwise direction so as to bring the idling roll **84** against the tape opposite the driving roll **80** while simultaneously lowering the tensioner **38** and styluses **140** and **156**. Preferably then the motor **82** is switched on by whatever means is provided and run for a period long enough to permit the tape to center itself in the driving mechanism. The lead selector switch **232** is then rotated as far as it will go in counterclockwise direction and the ribbon **148** of the stylus **156** is then checked to make sure that it is drawing its line through the numerals 1. If not the stylus is grasped near the stylus shaft **154** and sprung one way or the other, thereby slipping the clutch connection between the lever **168** and the shaft **154** until proper positioning is achieved. If either of the styluses is not bearing against the tape with the proper pressure, the adjusting screw **166** of the particular stylus is rotated one way or the other to achieve this adjustment.

From this point onward as the machine is in operation the stylus ribbon **148** will draw a line through the appropriate set of numerals 1 to 4 to indicate the 1 to 4 positions of the tap switch knob **232** which in turn selects certain combinations of electrode connections to which these numbers are assigned. If any connections of electrodes in addition to those represented by the numerals 1 to 4 are desired, the tap switch knob **232** is turned to the appropriate position and additional code markings are made upon the tape by depressing the button **246** to form the desired number of outwardly directed pips in the line drawn by the stylus ribbon **148**.

Meanwhile rotation of the driving roll **80** will be accompanied by the formation of inwardly directed pips in the line drawn by the stylus ribbon **148** at the rate of one pip for each half revolution which in the present instance is one pip each second since the driving roll rotates at 30 revolutions per minute. While the instrument is operating, the galvanometer **136**, which is connected to the electrocardiograph amplifier will, through

the medium of the stylus 140, draw the characteristic electrocardiogram upon the central portion of the tape where it may easily be correlated with the trace drawn by stylus ribbon 148.

Although our invention has been described in connection with a specific embodiment thereof, it will be appreciated that additions thereto and variations therefrom may be made without departing from the scope of the invention.

Having described our invention, what we claim as new and useful and desire to secure by Letters Patent of the United States is:

1. In an electrocardiograph, the combination of a tape roll support, two coacting tape tensioning elements adapted to engage opposite sides of tape trained therebetween from said roll support, means supporting one of said elements for movement toward and away from the other element, a thin elongated tape support for tape trained from between said tensioning elements, a flexible stylus extending into proximate opposing relation to said elongated tape support, a rotary tape pulling roller, driving means connected to rotate said roller, a tape clamping roller for holding against said pulling roller tape trained from said elongated tape support; a roller support freely swingable relative to said stylus, said elongated tape support, and said tensioning elements and connected to support said clamping roller; means pivotally supporting said swingable roller support, said pivotal support means and the coacting portion of said swingable roller support being formed to provide for translation of the swingable support, stationary guide means, guide means on said roller support positioned for separable engagement with said stationary guide means, said stationary guide means and said roller support guide means being oriented to constrain said clamping roller in the vicinity of said pulling roller for movement toward the latter in a predetermined direction making a large acute angle with a line extending through the axes of both rollers, a spring connected to the roller support to urge the latter in a direction for carrying said clamping roller toward said pulling roller, said spring being oriented to have a line of action on the roller support which makes an acute angle with said predetermined direction, a rotary disabling cam having a manual operator therefor, a cam follower on said roller support positioned for engagement by said cam to translate and swing said roller support to a tape threading position in which said clamping roller is carried away from said pulling roller, means on said roller support positioned to move said stylus away from said elongated tape support as an incident to movement of said roller support to said tape threading position, and means interconnecting said cam with said one tape tensioning element to move the latter away from the coacting tensioning element as an incident to operation of said cam to separate said rollers.

2. In an electrocardiograph, the combination of a tape roll support, tape tensioning means adapted to engage tape trained from said roll support, a thin elongated tape support for tape trained from said tensioning means, a rotary tape pulling roller, driving means connected to rotate said roller, a tape clamping roller for holding against said pulling roller tape trained from said elongated tape support, a support freely swingable relative to said elongated tape support and to said tensioning means and connected to support said clamping roller, means pivotally supporting said swingable roller support, said pivotal support means and the immediately coacting portion of said swingable roller support being formed to provide for translation of the latter, stationary guide means, guide means on said roller support positioned for separable engagement with said stationary guide means, said stationary guide means and said roller support guide means being oriented to constrain said clamping roller in the vicinity of said pulling roller for movement toward the latter in a predetermined direction making a large acute angle with a line extending through the axes of both rollers, a spring connected to said roller support to urge the latter in a direction for carrying said clamping roller toward said driving roller, said spring being oriented to have a line of action on the roller support which makes an acute angle with said predetermined direction, a rotary disabling cam having a manual operator therefor, and a cam follower on said roller support positioned for engagement by said cam to translate and swing said roller support to a tape threading position in which said clamping roller is carried away from said pulling roller.

3. In an electrocardiograph, the combination of a tape roll support, tape tensioning means adapted to engage tape trained from said roll support, a thin elongated tape support for tape trained from said tensioning means, a rotary tape pulling roller, driving means connected to rotate said roller, a tape clamping roller for holding against said pulling roller tape trained from said elongated tape support, a support freely swingable relative to said elongated tape support and said tensioning means and connected to support said clamping roller, means pivotally supporting said swingable roller support, said pivotal support means and the immediately coacting portion of said swingable roller support being formed to provide for translation of the latter, guide means coacting with said roller support to constrain said clamping roller in the vicinity of said pulling roller for movement toward the latter in a predetermined direction making a large acute angle with a line extending through the axes of both rollers, a spring connected to said roller support to urge the latter in a direction for carrying said clamping roller toward said driving roller, and leverage multiplying means including a manual operator therefor coacting with said roller support to move the latter to a tape threading position in which said clamping roller is carried away from said pulling roller.

References Cited in the file of this patent

UNITED STATES PATENTS

745,240	Rolland	Nov. 24, 1903
1,400,827	Leumann	Dec. 20, 1921
1,910,361	Pick	May 23, 1933
2,133,104	Logan	Oct. 11, 1938
2,152,333	Spitzglass	Mar. 28, 1939
2,511,195	Buhrendorf et al.	June 13, 1950
2,530,739	Stamper	Nov. 21, 1950
2,575,959	Hogan	Nov. 20, 1951
2,590,554	Lukacs	Mar. 25, 1952