US00D559615S

(12) United States Design Patent

Laib et al.

(10) Patent No.: US D559,615 S
(45) Date of Patent: ** Jan. 15, 2008

(54) **PASTA DISPENSER DISK**

(75) Inventors: **Douglas M. Laib**, Orlando, FL (US); **Samuel M. Hand, Jr.**, Saint Cloud, FL (US)

(73) Assignee: **Dart Industries Inc.**, Orlando, FL (US)

(**) Term: **14 Years**

(21) Appl. No.: **29/261,083**

(22) Filed: **Jun. 7, 2006**

(51) **LOC (8) Cl.** **07-01**
(52) **U.S. Cl.** **D7/387**; D7/550.1; D7/566
(58) **Field of Classification Search** D7/323, D7/354, 357, 364, 387, 500, 538, 540–542, D7/545–547, 549, 550.1, 554.3, 557, 554.4, D7/589, 590, 637, 701, 708; D3/201; D9/414, D9/426, 500, 737, 740; D19/92; D28/61; 220/23.9, 403, 470, 500, 504, 506, 507, 520, 220/528, 529, 556, 574, 575, 915.1, 495.01, 220/495.03, 495.06; 206/218, 223, 541, 206/549, 521.15, 557
See application file for complete search history.

(56) **References Cited**

U.S. PATENT DOCUMENTS

2,191,811	A *	2/1940	Trampier, Sr.	119/51.5
D135,524	S *	4/1943	Johnstone	D7/550.1
D154,671	S *	8/1949	Foley	D7/566
2,903,127	A	9/1959	Dorman	
4,366,914	A	1/1983	Ingram	
D276,139	S	10/1984	Rayner	
D284,058	S *	6/1986	Kahn et al.	D7/587
4,607,758	A *	8/1986	Stevens	220/23.83
D286,268	S	10/1986	Wolff	
D318,777	S	8/1991	Freese	
D342,806	S *	12/1993	Jones et al.	D28/73
D402,509	S *	12/1998	Indekeu	D7/566
D430,458	S *	9/2000	Kellermann	D7/566
D446,082	S *	8/2001	Voves	D7/566
D484,000	S *	12/2003	Levien	D7/553.6
D514,384	S *	2/2006	Mitchell et al.	D7/410
D520,749	S *	5/2006	Boutin	D3/304

* cited by examiner

Primary Examiner—Philip S. Hyder
Assistant Examiner—Cynthia Underwood
(74) *Attorney, Agent, or Firm*—John A. Doninger

(57) **CLAIM**

The ornamental design for a pasta dispenser disk, as shown and described.

DESCRIPTION

FIG. **1** is a top, right side and front perspective view of a pasta dispenser disk showing the new design;

FIG. **2** is a front elevation view thereof, the rear elevation being a mirror image thereof;

FIG. **3** is a right side elevation view thereof;

FIG. **4** is a left side elevation view thereof;

FIG. **5** is a top plan view thereof; and,

FIG. **6** is a bottom plan view thereof.

1 Claim, 2 Drawing Sheets

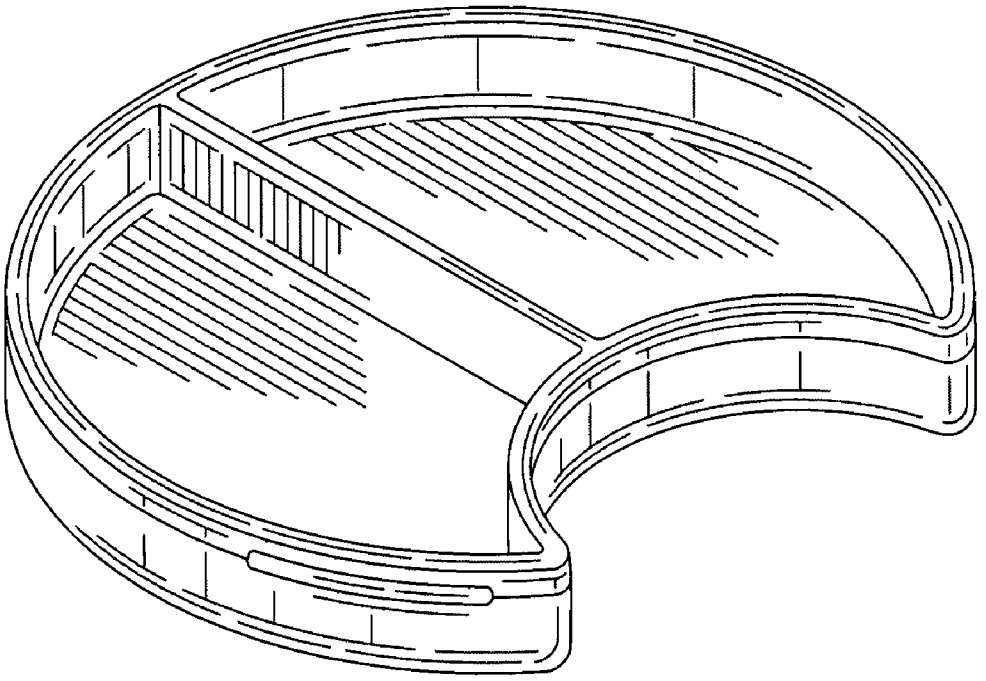

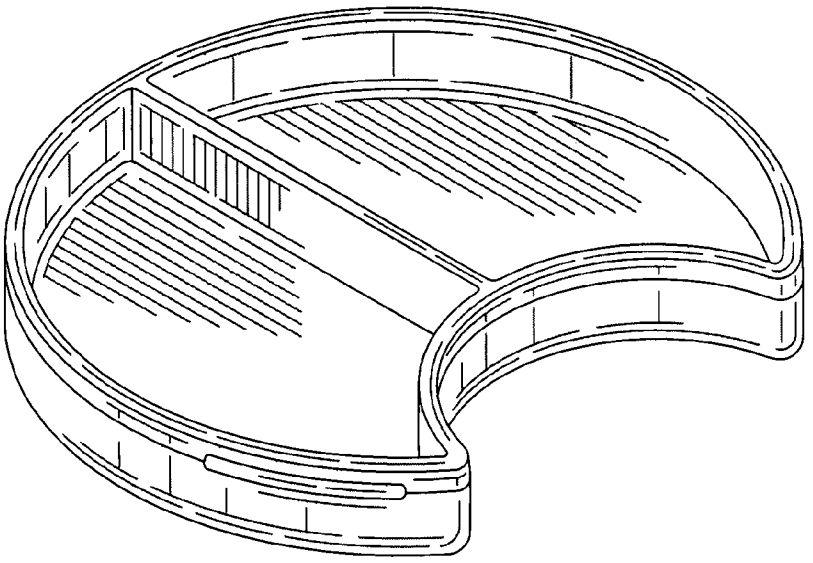

FIG. 1

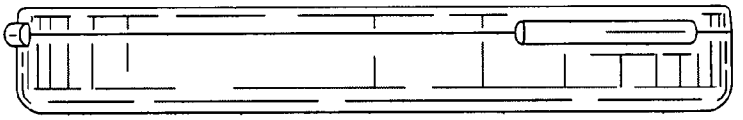

FIG. 2



FIG. 3

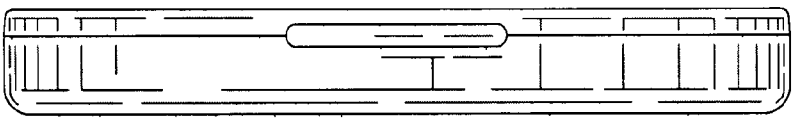

FIG. 4

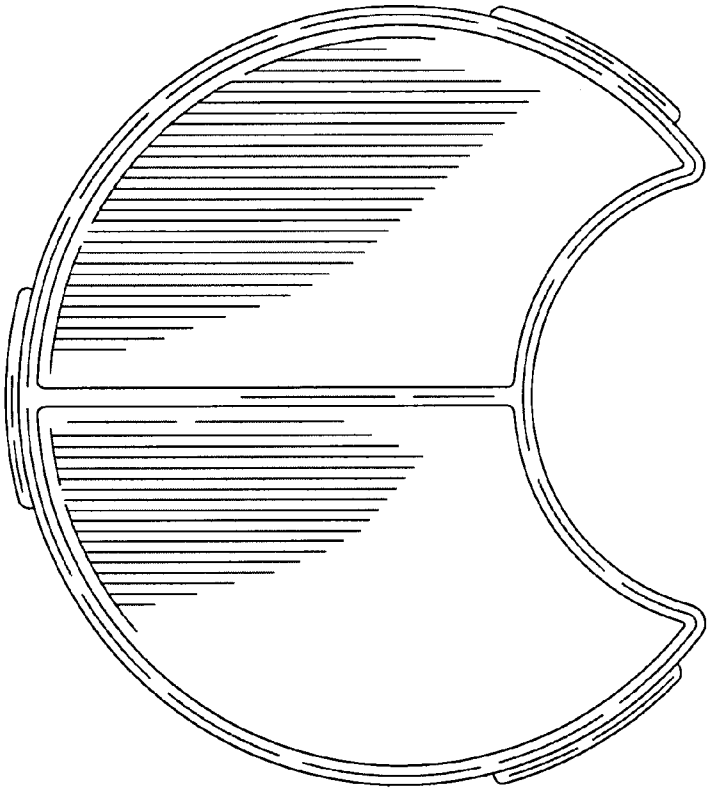

FIG. 5

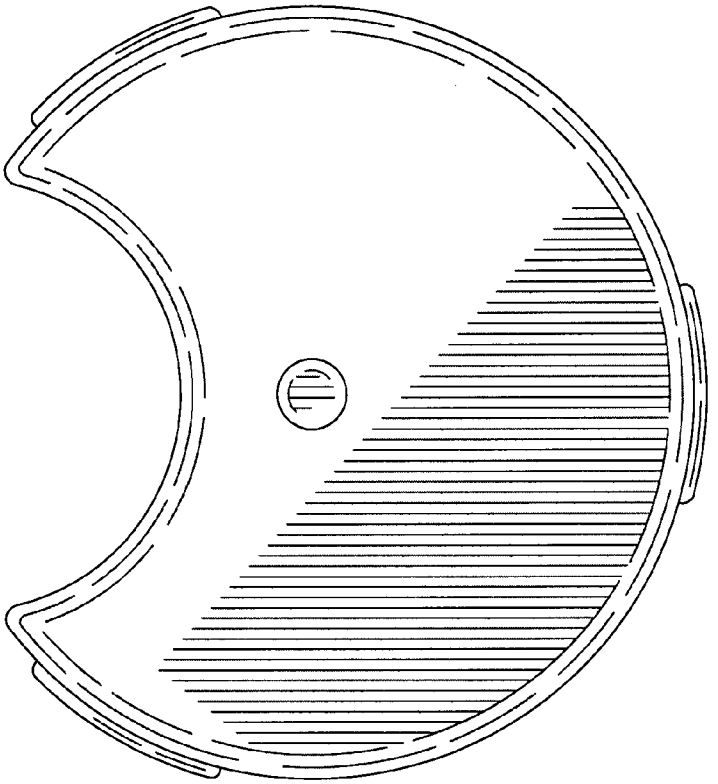

FIG. 6