R. J. MEYER.

ORCHARD HEATER.

APPLICATION FILED AUG. 9, 1909.

958,151.

Patented May 17, 1910.

Fig. 1.

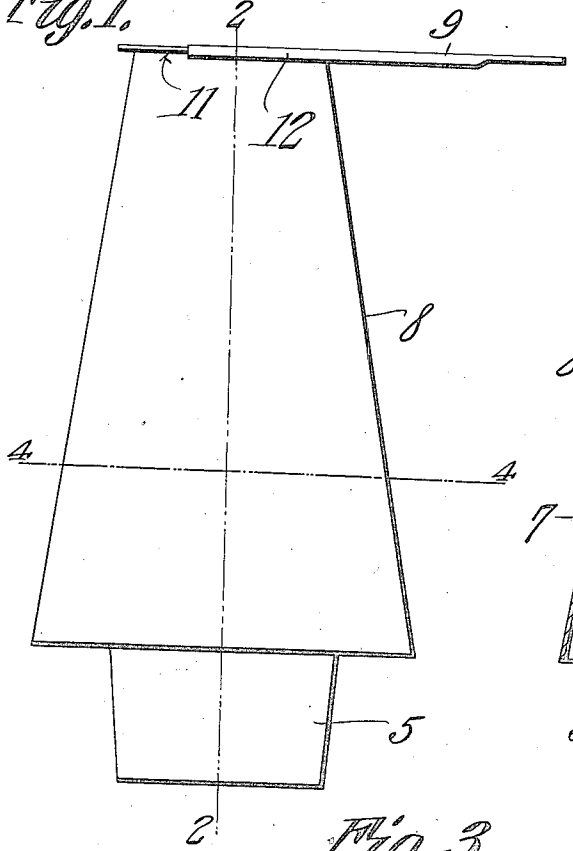

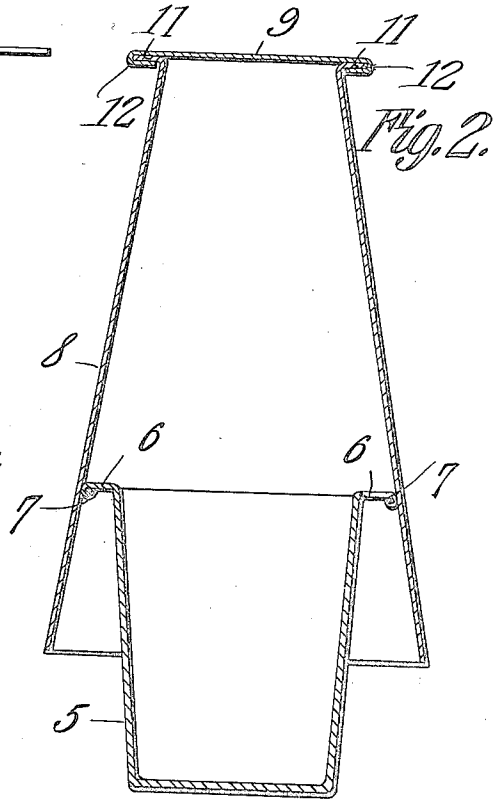

Fig. 2.

Fig. 3.

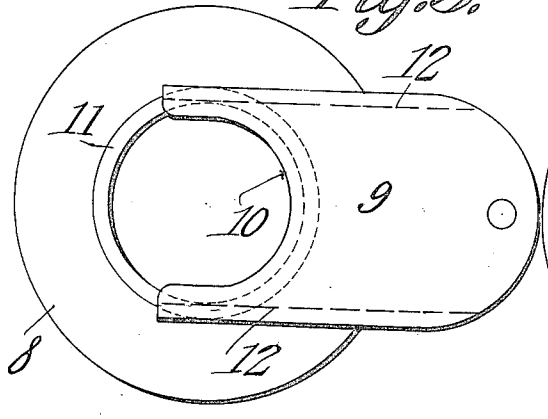

Fig. 4.

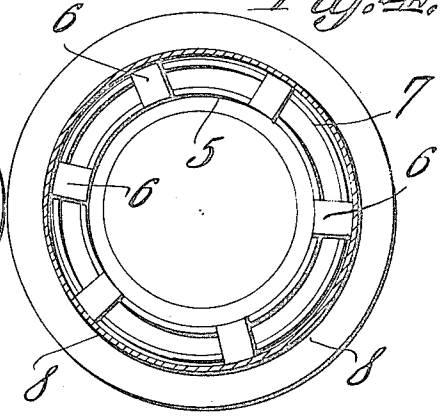

Witnesses

E. G. Stewart

M. A. Schmidt

Inventor

Ralph J. Meyer.

By C. A. Snow & Co.

Attorneys

UNITED STATES PATENT OFFICE.

RALPH J. MEYER, OF GRAND JUNCTION, COLORADO.

ORCHARD-HEATER.

958,151. Specification of Letters Patent. Patented May 17, 1910.

Application filed August 9, 1909. Serial No. 511,951.

To all whom it may concern:

Be it known that I, RALPH J. MEYER, a citizen of the United States, residing at Grand Junction, in the county of Mesa and State of Colorado, have invented a new and useful Orchard-Heater, of which the following is a specification.

This invention relates to that class of heaters which are used in orchards for preventing damage to the trees or plants by frost.

The heater which is the subject of the present invention is designed for the use of liquid fuel, and it consists in the novel construction and arrangement of parts to be hereinafter described and claimed.

It is the object of the invention to provide a heater which is simple in structure, and economical in its consumption of fuel.

Another object is to provide a heater which is so constructed that it may remain in the orchard when not in use, so as to be ready for instant use in case of indications of frost.

The invention also has for its object to provide for an ample draft through the heater, thereby eliminating smoke and saving fuel.

In the accompanying drawings, Figure 1 is an elevation of the heater. Fig. 2 is a vertical section on the line 2—2 of Fig. 1. Fig. 3 is a plan view. Fig. 4 is a horizontal section on the line 4—4 of Fig. 1.

In the drawing, 5 denotes a receptacle, preferably cylindrical in form, in which the liquid fuel is received, and which therefore serves as a burner. The receptacle is open at the top, and from its top edge project outwardly, a suitable distance, horizontally disposed flanges 6 which are bent at their outer ends over a ring 7 encircling the top of the receptacle, and spaced therefrom by the flanges.

At 8 is indicated a hood which is supported near its lower end by the flanges 6, and is tapered in the direction of its upper end. The hood is open at both ends, and serves as a chimney or stack for the heater. It is spaced at its lower end from the open end of the burner receptacle 5, by reason of which air to support combustion, may pass thereto. The hood extends at its lower end for some distance below the open end of the burner receptacle, so that the air is caused to take an upward course in its flow thereto, passing up through the space between the burner receptacle and the lower end of the hood and through the spaces between the flanges 6. The draft through the hood is thus produced, which is controlled by a damper mounted on the upper end thereof, said damper comprising a plate 9 which is slidable across said end to open the same more or less. The edge of the plate, at one end, is recessed as indicated at 10, and upon sliding said recessed edge across the open end of the hood, the area thereof is varied in an obvious manner.

The plate 9 is held in place on the hood by an annular flange 11 extending outwardly from the upper edge thereof, over which flange, at diametrically opposite points, the longitudinal edges of the plate are bent as indicated at 12. The bend is a loose one so that the plate may be slid freely back and forth for the purpose stated.

The parts herein described are very simple, they being formed of sheet metal and the heater can therefore be cheaply manufactured.

The heater is placed on the ground in the orchard, and when it is to be used, the liquid fuel is run into the receptacle 5, and ignited. The draft is controlled by the damper 9. When the heater is not in use, it may remain in the orchard upon closing the damper entirely, the hood then affording complete protection to the receptacle. As the hood is tapered, a number may be nested for convenience in shipment, and for the same reason the receptacle 5 may be made tapered.

What is claimed is:—

1. A heater comprising a fuel receptacle open at its upper end, a hood supported on said end of the receptacle, and surrounding the same in spaced relation therewith, whereby an air passage between the hood and the receptacle is had, said hood being open at its ends, and a damper on the upper end of the hood.

2. A heater comprising a fuel receptacle open at its upper end, a hood supported on said end of the receptacle, and surrounding the same in spaced relation therewith, whereby an air passage between the hood and the receptacle is had, said hood being open at its ends, and extending at its lower end below the upper end of the receptacle, and a damper on the upper end of the hood.

3. A heater comprising a fuel receptacle

having outstanding flanges at its upper end, and open at said end, a hood supported on said flanges in spaced relation with the receptacle, whereby an air passage between the hood and the receptacle is had, the hood being open at both ends, and a damper on the upper end of the hood.

In testimony that I claim the foregoing as my own, I have hereto affixed my signature in the presence of two witnesses.

RALPH J. MEYER.

Witnesses:
H. FREUDENBERGER,
F. D. COLTRIN.