(19) Europäisches Patentamt
European Patent Office
Office européen des brevets

(11) Publication number : 0 325 386 B1

# (12) EUROPEAN PATENT SPECIFICATION

(45) Date of publication of patent specification : **01.04.92 Bulletin 92/14**

(51) Int. Cl.[5] : **G01P 13/00**

(21) Application number : **89300338.4**

(22) Date of filing : **13.01.89**

## (54) A drop detector.

(30) Priority : **19.01.88 US 145425**

(43) Date of publication of application : **26.07.89 Bulletin 89/30**

(45) Publication of the grant of the patent : **01.04.92 Bulletin 92/14**

(84) Designated Contracting States : **DE FR GB**

(56) References cited : **US-A- 4 128 841**

(73) Proprietor : **Hewlett-Packard Company**
**Mail Stop 20 B-O, 3000 Hanover Street**
**Palo Alto, California 94304 (US)**

(72) Inventor : **Yeung, King W.W.**
**1800 Poncia Court**
**Fremont, CA 94539 (US)**
Inventor : **Franz, Douglas L.**
**10104 Northeast 37th Street**
**Vancouver, WA 98662 (US)**

(74) Representative : **Williams, John Francis et al**
**WILLIAMS, POWELL & ASSOCIATES 34**
**Tavistock Street**
**London WC2E 7PB (GB)**

EP 0 325 386 B1

Note : Within nine months from the publication of the mention of the grant of the European patent, any person may give notice to the European Patent Office of opposition to the European patent granted. Notice of opposition shall be filed in a written reasoned statement. It shall not be deemed to have been filed until the opposition fee has been paid (Art. 99(1) European patent convention).

## Description

The invention relates to the field of drop detectors. In particular, the invention relates to the field of high sensitivity drop detectors.

Drop detectors have various applications.U.S-.Patent No. 4,583,975, Indirect Piezoelectric Drop counter and Method, discloses a drop detector used in medical applications. U.S.Patent Nb. 4,401,909, Grain Sensor Using A Piezoelectric Element, discloses a drop detector for detecting grain particles dropping and impacting a tractor's sounding board. Ink jet printers may use drop detectors to measure the presence and speed of ink drops.

The prior-art drop detectors identify drops using various approaches. One prior-art electrostatic drop detector charges a drop when the drop forms. Later, an electric-field-sensing device senses the electric field of the charged drop and produces an output signal in response to the detection of that drop. Another prior-art electrostatic drop detector detects charged drops with an electrode. When a charged drop impacts the electrode, the charge on the drop produces a small current in the electrode that indicates the presence of a drop. Unfortunately, electrostatic drop detectors have low sensitivity which makes them useless in many applications. Another prior-art drop detector directs a collimated beam of light at a photodetector. When the drops travel through the light beam, the photodetector ontput varies accordingly to indicate the detection of a drop. However, the collimated beam of light must be precisely aligned with the photodetector and the drop trajectory. This precise alignment is difficult and expensive to obtain and makes optical drop detectors unsuitable for many applications.

Other prior-art drop detectors are disclosed in the following patents. U.S. Patent No. 4,583,975, Indirect Piezoelectric Drop Counter and Method, mentioned in a previous paragraph, mounts a polymeric piezoelectric film on the wall of the chamber. Instead of striking the piezoelectric film directly, the drops strike the surface of accumulated fluid and pressure waves travel through the walls of the chamber to the piezoelectric film. U.S. Patent No. 4,401,909, Grain Sensor Using A Piezoelectric Element, mentioned in a previous paragraph, mounts a piezoelectric transducer on a sounding board. When grain strikes the sounding board, the piezoelectric transducer is stressed and produces an output signal. U.S. Patent No. 4,128,841, Droplet Microphone, discloses a piezoelectric transducer mounted behind flexible diaphragm placed in the path of the moving droplet. U.S. Patent No. 4,286,274, Ink Droplet Catcher Assembly, discloses a modified version of the device disclosed in the U.S. Patent No. 4,128,841. This modified version does not have the diaphragm and exposes the piezoelectric transducer directly to the ink drops. U.S. Patent 4,067,019 Impact Position Transducer For Ink Jet, discloses a relatively inflexible, piezoelectric substrate attached to two parallel, closely-spaced conductors placed in the path of a moving droplet. These prior-art drop detectors have low sensitivity that impairs their ability to detect small drops. Additionally, these prior-art drop detectors do not work reliably in environments with electrical, acoustical, or mechanical noise because their output has a low signal-to-noise ratio. Many applications need drop detectors that can detect small drops and drops traveling in rapid succession of one another. Other applications require drop detectors that can detect drops in an electrically or acoustically noisy environment. None of these prior-art drop detectors appears to perform well in such environments or applications.

The present invention is a drop detector that, when struck by a drop, produces an output signal with a selected resonant frequency, shown in Figure 5B. Since this output signal has a selected resonant frequency, it is readily distinguishable in a noisy environment and a filter can be constructed that eliminates the noise. In contrast, when prior-art drop detectors are struck by a drop, they produce an output signal with a change in voltage amplitude as shown in Figure 5A. In noisy environments, this signal is often indistinguishable from the noise and the prior-art drop detector is useless.

A drop detector producing an output signal having a selected resonant frequency can be constructed by mounting a piezoelectric membrane to a substrate. The selected resonant frequency depends on the type of material used for the piezoelectric membrane, the thickness of the membrane, the mounting of the membrane to the substrate, and other parameters such as the coating on the membrane. When a drop strikes the piezoelectric membrane, the membrane vibrates at the selected resonant frequency. The vibrations of the membrane produce an output signal having a frequency equal to the selected resonant frequency. Since the frequency of the output signal is known, the output signal can be filtered with a bandpass filter to enhance the signal-to-noise ratio of the output signal. The resulting membrane drop detector is a high sensitivity, high signal-to-noise ratio drop detector that is capable of applications beyond drop detectors in the prior art.

Since the resonant frequency of the drop detector is selected, the drop detector of the present invention has the advantage that the resonant frequency can be selected to optimize the sensitivity and signal-to-noise ratio of the detector in a particular environment. Optimization of the sensitivity and the signal-to-noise ratio is achieved by selecting a resonant frequency where the composite environment produces little acoustic and electrical ambient noise. An additional advantage of the present invention is that the output signal frequency is known. Thus, the output signal of

the drop detector can be filtered with a bandpass filter to improve the signal-to-noise ratio of the detector. By placing the piezoelectric membrane in the drop trajectory, the drop detector of the present invention has the advantage of directly detecting a drop without interference from any intermediate part. An additional advantage of the membrane drop detector is its ability to detect small drops traveling at low velocities, such as, a 100 nanogram drop having a velocity component normal to membrane in the range of 1-100 m/sec. A further advantage of the membrane drop detector is the use of inexpensive parts and a simple manufacturing procedure. The high sensitivity and high signal-to-noise ratio drop detector of the present invention creates new applications for drop detectors. Some of these new applications are detecting small drops ejected by ink jet printers, metering out small quantities of pharmaceuticals and chemicals, and conducting measurements for chemical analysis.

Figure 1 shows the preferred embodiment of the membrane drop detector.

Figure 2 shows an exploded view of the preferred embodiment of the membrane drop detector.

Figure 3 shows an alternate embodiment of the membrane drop detector that uses two piezoelectric membranes connected in reverse polarity and uses a noise absorbing substrate.

Figure 4 shows the preferred embodiment of the wiping mechanism.

Figure 5A shows the output signal produced by prior-art drop detectors.

Figure 5B shows the output signal produced by a drop detector according to the present invention.

The following description has assigned reference numbers to the components. Each component has a two part number. The number preceding the hyphen represents the figure number. The number following the hyphen refers to the component.

Figure 1 shows the preferred embodiment of the piezoelectric membrane drop detector. The piezoelectric membrane 1-1 in the preferred embodiment of the invention is a piezoelectric polymer known as polyvinylidene fluoride (PVDF) that is about 9 microns thick. The polyvinylidene fluoride layer is metallized on either side with a layer of nickel and a layer of silver so that electrical connections can be made to the membrane. The nickel and silver layers are approximately 400 angstroms thick and are applied using a thin film deposition process such as evaporation, sputtering or chemical vapor deposition or other means, such as screen printing of conducting inks. Other metallization layers could be applied using similar processes. The metallized piezoelectric membrane is exemplified by one manufactured by Pennwalt Corporation located at 900 First Ave., King of Prussia, PA. Although the preferred embodiment of the invention uses polyvinylidene fluoride for the piezoelectric polymer, other materials may be substituted for it. Also, the piezoelectric polymer layer and the metal layers may have different thicknesses; but thin piezoelectric and metal layers are preferred, because the drops can deflect thin layers more readily than thick layers.

In the preferred embodiment, the piezoelectric membrane 1-1 is sandwiched between a cover plate 1-3 and a substrate 1-5. The cover plate 1-3 and the substrate 1-5 are preferably 0.112mm thick Mylar selectively coated with a silver ink conductor 2-7. This silver ink conductor 2-7 conducts the electrical signals produced by the piezoelectric membrane 2-1 toward a printer controller (not shown). The piezoelectric membrane 2-1 is attached to the cover plate 2-3 and the substrate 2-5 with a pressure-sensitive adhesive that conducts electric signals, such as, the z-adhesive made by the Sheldahl Company of Northfield, Minnesota. In alternate embodiments of the invention, the substrate could be made from materials other than Mylar and could have thicknesses other than 0.112mm. Also, a conductor other than silver ink and an adhesive other than the z-adhesive could be used.

As mentioned earlier, the primary feature and advantage of this membrane drop detector is that it vibrates at a selected resonant frequency when a drop impacts the membrane. The resonant frequency of the drop detector depends on many parameters, including: the material the membrane is made from, the thickness of the membrane, the material that coats the membrane, the thickness of the material that coats the membrane, and the mounting of the membrane to the substrate. Figure 1 shows the preferred mounting of the membrane 1-1. The piezoelectric membrane 1-1 is mounted across a slot 1-11. The membrane 1-1 located on top of the substrate 1-5 is glued to the substrate 1-5 as described in the previous paragraph. Since the length of the membrane in the slot 1-19 is less than the length of the slot 1-21, the short ends of the membrane 1-17 are not anchored to the substrate 1-5. This configuration allows the membrane 1-1 to vibrate at a selected resonant frequency when struck by a drop.

In addition to the previously mentioned parameters, the resonant frequency depends on the length and the width of the membrane 1-1 inside the slot 1-11. In the preferred embodiment of the invention, the width 1-23 of the membrane inside the slot 1-11 is 1.79mm and the length 1-19 of the membrane in the slot 1-11 is 6.72mm. In the illustrated embodiment, the resulting membrane drop detector has a resonant frequency of 10 KHz. Alternate embodiments of the membrane drop detector, which may have a different resonant frequency, are formed by changing the dimensions of the membrane 1-1 inside the substrate slot 1-11 or by altering the membrane material or the coating on the membrane 1-1 or the tension of the membrane. The output signal of the drop detector may be filtered with a bandpass filter to

improve the signal-to-noise ratio of the output signal.

The preferred embodiment of the membrane drop detector has a space behind slot 1-11 that allows the membrane 1-1 to vibrate freely. When the membrane drop detector is used in high frequency applications where drops strike the membrane 1-1 in rapid succession, damping materials can be placed behind the membrane 1-1 to allow the membrane 1-1 to recover quickly from a drop.

If drops accumulate on the piezoelectric membrane 1-1, the resonant frequency of the piezoelectric membrane 1-1 will change. Therefore, the preferred embodiment of the invention has a wiping mechanism that removes drops from the piezoelectric membrane 1-1. In the preferred embodiment of the invention, the slot 2-9 in the cover plate is larger than the slot 2-11 in the substrate. Figure 1 shows this feature more clearly. The substrate 1-5 supports the piezoelectric membrane 1-1 during the wiping process. The larger slot 1-9 of the cover plate exposes the piezoelectric membrane 1-1 to facilitate the wiping. The wiping mechanism 4-2 is a roller that moves across the piezoelectric membrane 4-1 exposed by the cover slot 4-9 and pushes drops off the membrane 4-1 through holes 4-13 at the ends of the slot. To protect the piezoelectric membrane 1-1 and to reduce its surface friction, the membrane may be coated with a protective, non-wettable substance 2-19 such as polytetrafluorethylene, known as Teflon. Alternate embodiments may remove drops by shaking off the drops by driving the piezoelectric membrane at a selected resonant frequency with a high voltage signal. Other exemplary embodiments may remove drops by (i) blowing the fluid off the polytetrafluorethylene surface, (ii) using long wicking fibers to wick fluid from the surface, (iii) taking advantage of gravitational force, (iv) generating centrifugal force to act against drops, (v) vaporizing drops or, (vi) using various combinations of the preceding embodiments.

Ink jet printers may use drop detectors according to the preferred embodiment of the present invention to improve the quality of the printed image by extracting information from the ejected drop and using this information to adjust the operating parameters of the printhead. Also, drop detectors can be used to test the performance of drop generators in an ink jet printer and to automate the operation of the printhead as well as improve the print quality.

In the preferred embodiment of the invention, the cover plate 2-3 and its silver ink conductor shield the drop detector from electromagnetic fields. The piezoelectric membrane 2-1 connects a pattern on the cover plate 2-3 to a pattern 2-13 on the bottom substrate 2-5 as a return to shield the signal from electromagnetic interference.

Figure 3 shows an alternate embodiment of the drop detector. This embodiment has two piezoelectric membranes 3-1. The membranes 3-1 are attached to the same conductive layer 3-3 that is mounted to the substrate 3-5. The substrate 3-5 has a void 3-11 behind each membrane so the membrane 3-1 can vibrate freely. The membrane output connections 3-9 are connected to provide common-mode rejection and improve the signal-to-noise ratio of the drop detector output. Additionally, this embodiment may be mounted on a noise absorbing substrate 3-7 to improve the signal-to-noise ratio of the output.

## Claims

1. An apparatus for detecting drops, characterised in that it comprises a substrate (1-5) and detection means (1-1) located in the trajectory of the drop for producing an output signal with a selected resonant frequency, in response to a drop impacting thereon, wherein the detection means is attached to the substrate (1-5).

2. An apparatus as in claim 1 wherein the detection means comprises a piezoelectric membrane (1-1) mounted on the substrate (1-5) to allow vibrations at the selected resonant frequency in response to a drop impacting the membrane (1-1).

3. An apparatus as in claim 1 wherein the detection means operates in an environment with noise and the selected resonant frequency is a frequency other than the noise frequencies.

4. An apparatus as in claim 3 further comprising a bandpass filter centered at the selected resonant frequency to filter out the noise.

5. An apparatus as in any of claims 2 to 4 wherein the piezoelectric membrane (1-1) is between 1 micron and 100 microns thick.

6. An apparatus as in any of claims 2 to 5 further comprising removal means for removing the drop from the membrane (1-1).

7. A method for detecting drops, comprising: selecting a resonant frequency of a detection means capable of vibration; causing the means (1-1) to vibrate at the selected resonant frequency in response to the impact of a drop; detecting the presence of the resonant frequency vibrations; and indicating the presence of a drop.

## Patentansprüche

1. Vorrichtung zum Erfassen von Tropfen, dadurch **gekennzeichnet**, daß sie ein Substrat (1-5) und eine Detektorvorrichtung (1-1) umfaßt, welche in der Trajektorie des Tropfens zum Erzeugen eines Ausgangssignales mit ausgewählter Resonanzfrequenz auf einen Tropfenaufprall hin angeordnet ist, wobei die Detektorvorrichtung am Substrat (1-5) angebracht ist

2. Vorrichtung nach Anspruch 1, bei der die

Detektorvorrichtung eine piezoelektrische Membran (1-1) aufweist, welche auf dem Substrat (1-5) aufgebracht ist, um Schwingungen bei ausgewählten Resonanzfrequenzen auf einen Tropfenaufprall auf die Membran (1-1) hin zu ermöglichen.

3. Vorrichtung nach Anspruch 1, wobei die Detektorvorrichtung in einer Umgebung mit Geräusch arbeitet und die ausgewählte Resonanzfrequenz eine andere Frequenz als die Geräuschfrequenzen ist.

4. Vorrichtung nach Anspruch 3, die ferner ein Band-Paß-Filter aufweist, welches auf die ausgewählte Resonanzfrequenz zentriert ist, um das Geräusch auszufiltern.

5. Vorrichtung nach einem der Ansprüche 2 bis 4, wobei die piezoelektrische Membran (1-1) zwischen 1 Mikron und 100 Mikron stark ist.

6. Vorrichtung nach einem der Ansprüche 2 bis 5, die ferner ein Entfernungsmittel zum Entfernen des Tropfens von der Membran (1-1) umfaßt.

7. Verfahren zum Erfassen von Tropfen, wobei eine Resonanzfrequenz einer schwingungsfähigen Detektorvorrichtung ausgewählt wird; die Detektorvorrichtung (1-1) auf einen Tropfenaufprall hin zum Schwingen bei der ausgewählten Resonanzfrequenz veranlaßt wird; das Vorhandensein der Resonanzfrequenz-Schwingungen erfaßt wird und die Präsenz eines Tropfens angezeigt wird.

## Revendications

1. Appareil pour détecter des gouttes, caractérisé en ce qu'il comprend un substrat (1-5) et un moyen de détection (1-1) situé dans la trajectoire de la goutte et destiné à produire un signal de sortie ayant une fréquence de résonance choisie, en réponse à l'impact d'une goutte sur lui, dans lequel le moyen de détection est attaché au substrat (1-5).

2. Appareil selon la revendication 1, dans lequel le moyen de détection comprend une membrane piézoélectrique (1-1) montée sur le substrat (1-5) de manière à permettre des vibrations à la fréquence de résonance choisie en réponse à l'impact d'une goutte sur la membrane (1-1).

3. Appareil selon la revendication 1, dans lequel le moyen de détection fonctionne dans un environnement dans lequel règne du bruit et la fréquence de résonance choisie est une fréquence autre que les fréquences du bruit.

4. Appareil selon la revendication 3, comprenant en outre un filtre passe-bande centré sur la fréquence de résonance choisie en vue de l'élimination du bruit par filtrage.

5. Appareil selon l'une quelconque des revendications 2 à 4, dans lequel la membrane piézoélectrique (1-1) possède une épaisseur comprise entre 1 et 100 micromètres.

6. Appareil l'une quelconque des revendications 2 à 5, comprenant en outre un moyen d'enlèvement pour enlever la goutte de la membrane (1-1).

7. Procédé pour détecter des gouttes, comprenant: la sélection d'une fréquence de résonance d'un moyen de détection capable de vibrer; la mise en vibration du moyen (1-1) à la fréquence de résonance choisie en réponse à l'impact d'une goutte; la détection de la présence des vibrations à la fréquence de résonance et l'indication de la présence d'une goutte.

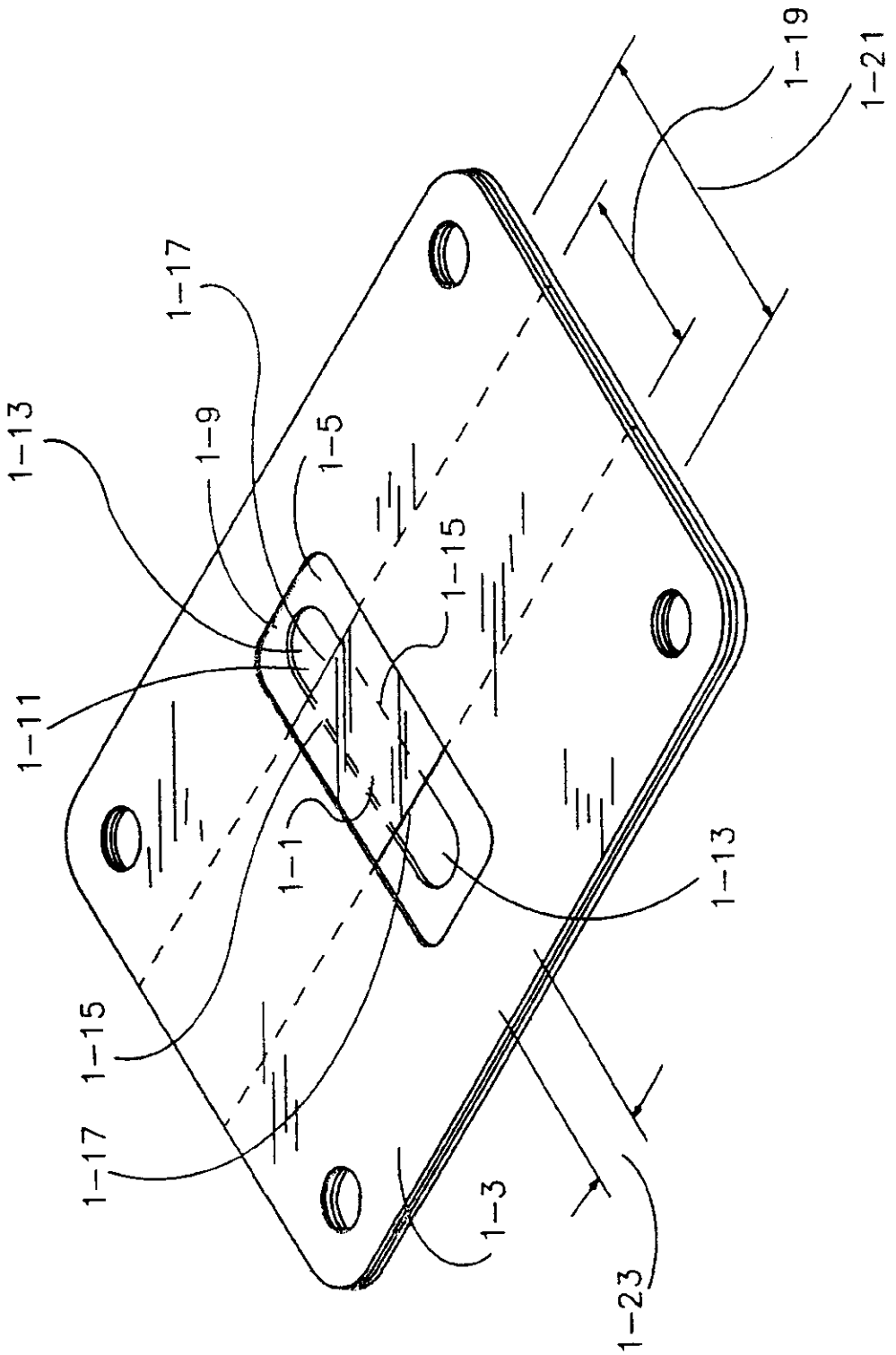


FIG 1

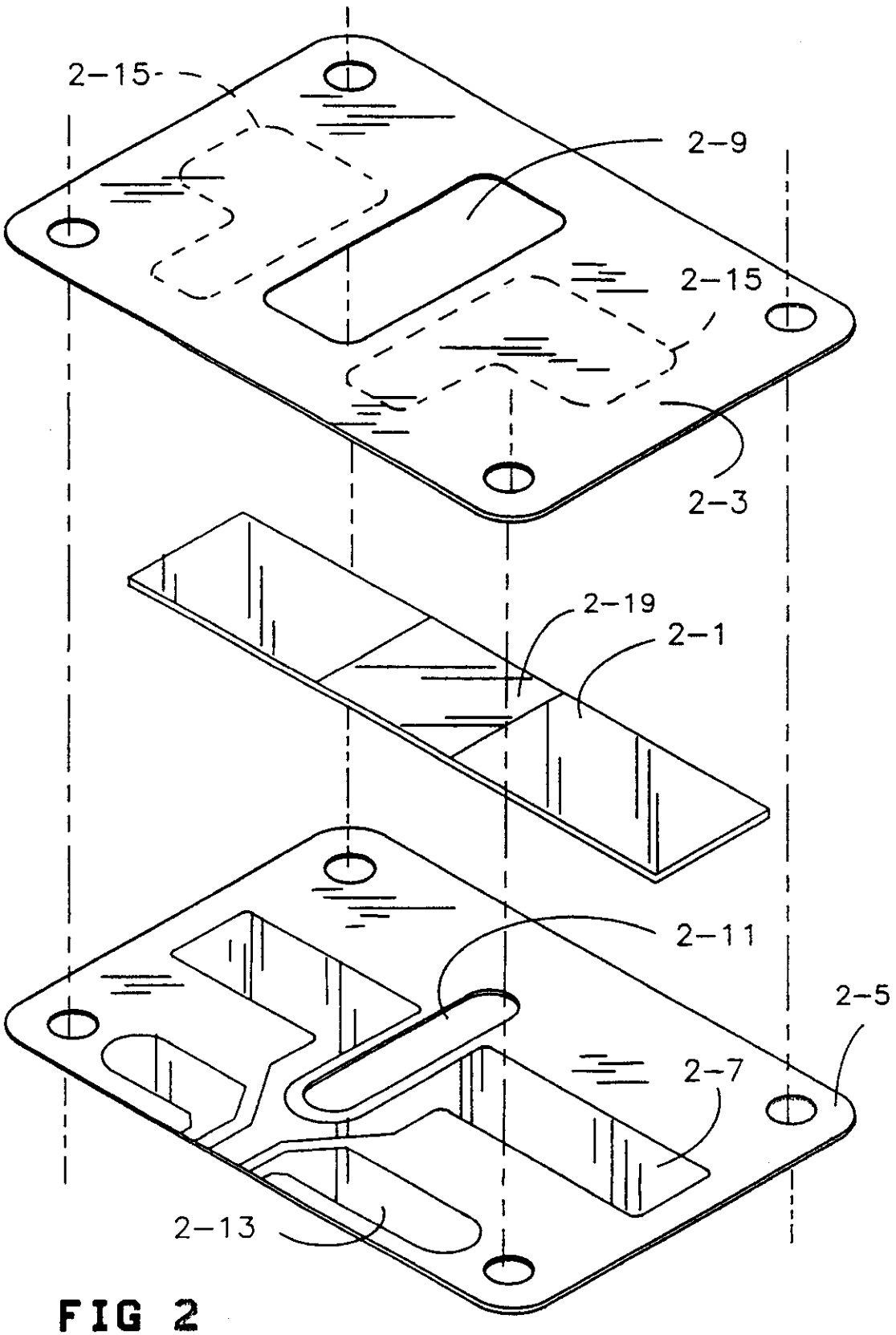


FIG 2

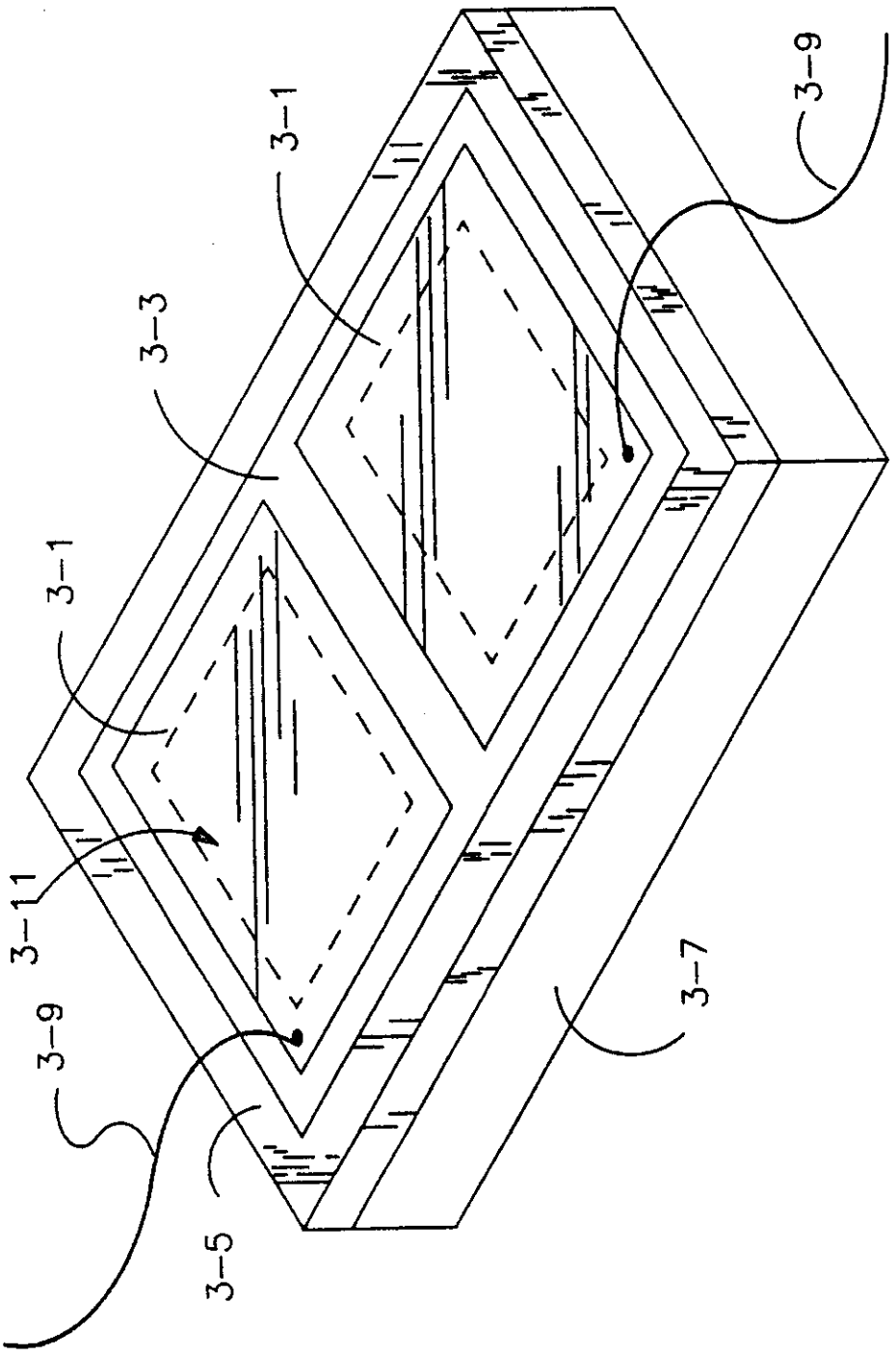


FIG 3

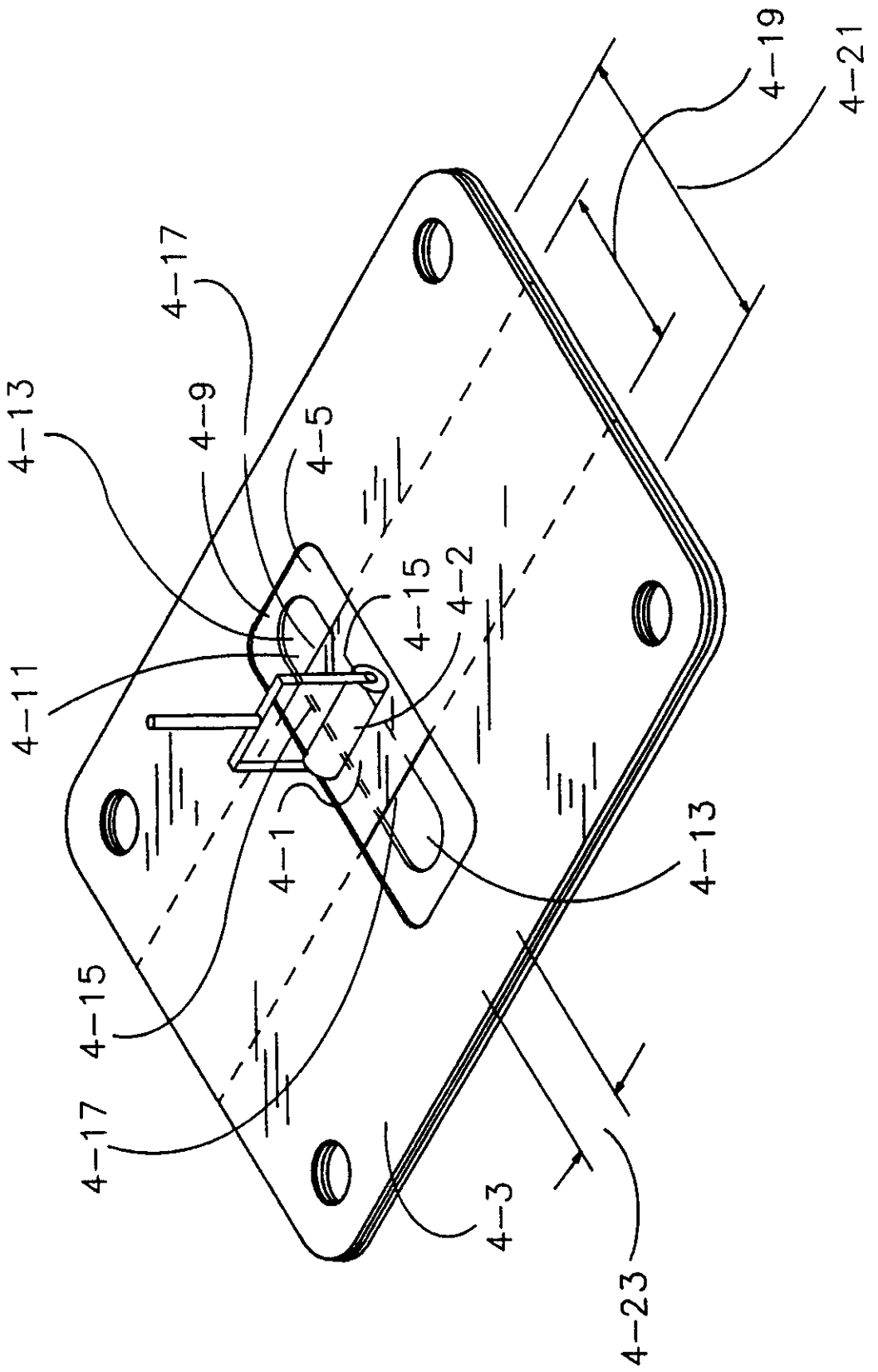


FIG 4

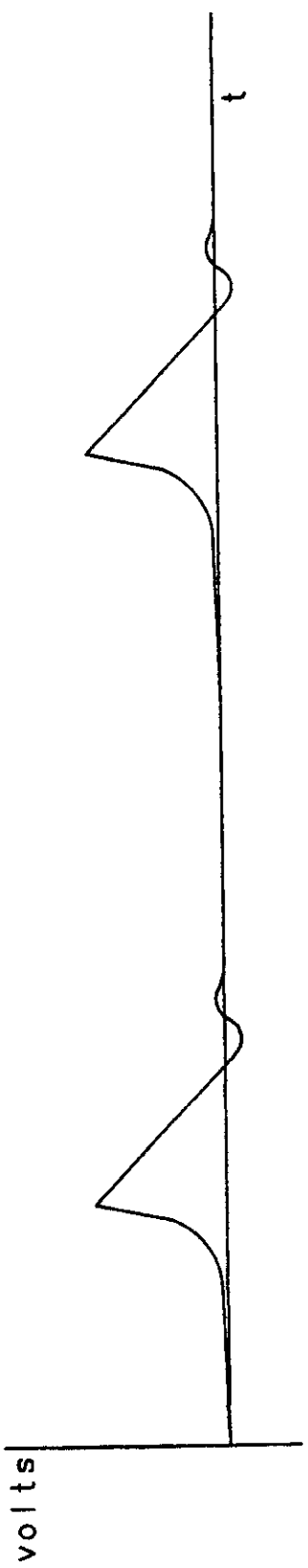


FIG 5A (PRIOR ART)

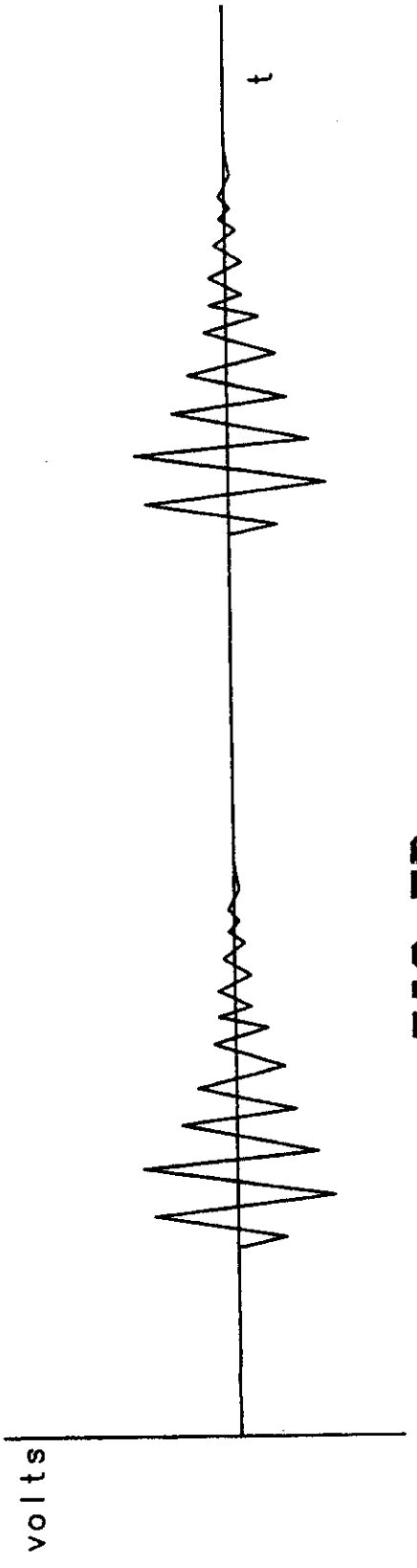


FIG 5B

REGISTER ENTRY FOR EP0325386

European Application No EP89300338.4 filing date 13.01.1989

Priority claimed:
19.01.1988 in United States of America - doc: 145425

Designated States DE FR GB

Title A DROP DETECTOR.

Applicant/Proprietor
HEWLETT-PACKARD COMPANY, 3000 Hanover Street, Palo Alto California 94304, United States of America [ADP No. 50014570002]

Inventors
KING W.W. YEUNG, 1800 Poncia Court, Fremont, CA 94539, United States of America [ADP No. 56708001001]

DOUGLAS L. FRANZ, 10104 Northeast 37th Street, Vancouver, Wash.98662, United States of America [ADP No. 56708019001]

Classified to
G01P

Address for Service
JOHN FRANCIS WILLIAMS, WILLIAMS, POWELL & ASSOCIATES 34 Tavistock Street, London WC2E 7PB, United Kingdom [ADP No. 50587054001]

EPO Representative
JOHN FRANCIS WILLIAMS, J.F. Williams & Co 34 Tavistock Street, London WC2E 7PB, United Kingdom [ADP No. 50587054001]

Publication No EP0325386 dated 26.07.1989
Publication in English

Examination requested 11.09.1989

Patent Granted with effect from 01.04.1992 (Section 25(1)) with title A DROP DETECTOR.

---

02.03.1992 Notification from EPO of change of Applicant/Proprietor details
from
HEWLETT-PACKARD COMPANY, 3000 Hanover Street, Palo Alto California 94304, United States of America [ADP No. 50014570002]
to
HEWLETT-PACKARD COMPANY, Mail Stop 20 B-O, 3000 Hanover Street, Palo Alto, California 94304, United States of America [ADP No. 50014570001]
Entry Type 25.14 Staff ID. RD06 Auth ID. EPT

02.03.1992 Notification from EPO of change of EPO Representative details from
JOHN FRANCIS WILLIAMS, J.F. Williams & Co 34 Tavistock Street, London WC2E 7PB, United Kingdom [ADP No. 50587054001]
to
JOHN FRANCIS WILLIAMS, WILLIAMS, POWELL & ASSOCIATES 34 Tavistock Street, London WC2E 7PB, United Kingdom [ADP No. 50587054001]
Entry Type 25.14 Staff ID. RD06 Auth ID. EPT

02.03.1992 Notification from EPO of change of Inventor details from
KING W.W. YEUNG, 1800 Poncia Court, Fremont, CA 94539, United States of America [ADP No. 56708001001]

DOUGLAS L. FRANZ, 10104 Northeast 37th Street, Vancouver, Wash.98662, United States of America [ADP No. 56708019001]
to
KING W.W. YEUNG, 1800 Poncia Court, Fremont, CA 94539, United States of America [ADP No. 56708001001]

DOUGLAS L. FRANZ, 10104 Northeast 37th Street, Vancouver, WA 98662, United States of America [ADP No. 59588368001]
Entry Type 25.14 Staff ID. RD06 Auth ID. EPT

**** END OF REGISTER ENTRY ****

RENEWAL DETAILS

PUBLICATION NUMBER EP0325386

PROPRIETOR(S)

Hewlett-Packard Company, Mail Stop 20 B-O, 3000 Hanover Street,
Palo Alto, California 94304, United States of America

DATE FILED 13.01.1989

DATE GRANTED 01.04.1992

DATE NEXT RENEWAL DUE 13.01.1993

DATE NOT IN FORCE

DATE OF LAST RENEWAL

YEAR OF LAST RENEWAL 00

STATUS PATENT IN FORCE