(No Model.)

F. M. FARWELL.

AUTOMATIC GONG.

No. 456,482. Patented July 21, 1891.

Fig. 1.

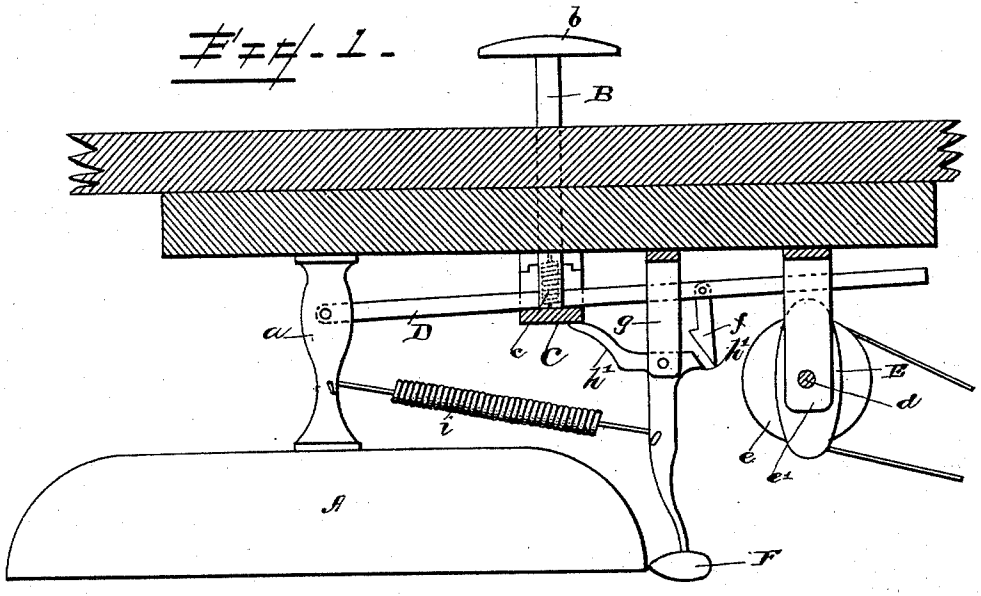

Fig. 2.

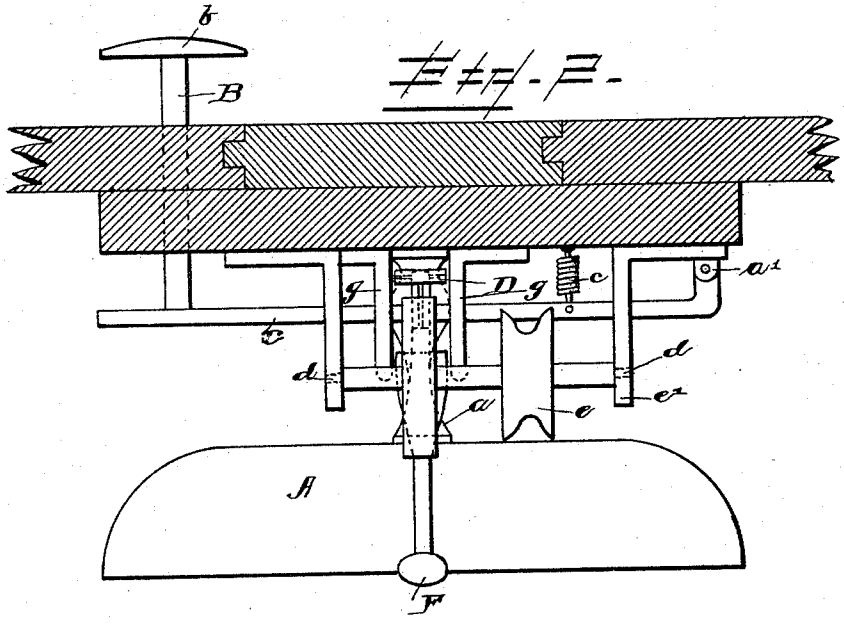

Witnesses
Albert B. Blackwood
Josiah Blackwood

Inventor
Frank M. Farwell
by W. A. Doolittle
Attorney

THE NORRIS PETERS CO., PHOTO-LITHO., WASHINGTON, D. C.

UNITED STATES PATENT OFFICE.

FRANK M. FARWELL, OF CHICAGO, ILLINOIS.

AUTOMATIC GONG.

SPECIFICATION forming part of Letters Patent No. 456,482, dated July 21, 1891.

Application filed September 13, 1890. Renewed June 27, 1891. Serial No. 397,739. (No model.)

To all whom it may concern:

Be it known that I, FRANK M. FARWELL, a citizen of the United States, residing at Chicago, in the county of Cook and State of Illinois, have invented certain new and useful Improvements in Automatic Gongs; and I do hereby declare the following to be a full, clear, and exact description of the invention, such as will enable others skilled in the art to which it appertains to make and use the same.

My invention relates to an improved gong-signal for grip and motor cars of cable and electric railways, &c.; and it consists, principally, of a push bar or lever adapted to be operated by the foot or otherwise and actuating a lever capable of directly actuating the gong-hammer, or, through intermediate mechanism, of effecting the sounding of the gong from the car-wheel axle.

My invention is illustrated in the accompanying drawings, in which Figure 1 is a side elevation, also showing a section of a part of a car; Fig. 2, an end elevation, a portion of the car likewise being shown in section.

In carrying out my invention I suspend, preferably from the under side of the bottom of the car in any suitable way, a gong A, in the present instance by a pendent bracket or support *a*, and extending through the bottom or floor of the car is a push bar or lever B. The push bar or lever has at its upper end a disk *b*, or is otherwise suitably adapted to permit the convenient application of the foot thereto for its actuation, said end normally standing a short distance above the car-floor.

C is a lever, preferably pivoted at one end in a pendent bracket or support *a'*, depending from the car-bottom, and is adapted to be acted upon near its opposite or free end by the lower end of the push bar or lever B resting thereon. The lever C is held in its normally elevated position by a spring *c*, connected thereto and to the car-bottom, the push bar or lever B, it is obvious, thus also being held in its elevated position.

D is a third lever, preferably pivoted in the bracket or support *a* of the gong and adapted to be acted upon at its free end by the revolving cam E, secured upon the shaft or axis *d* of a pulley *e*, hung in hangers or pendants *e'*, secured to the car-bottom, said pulley being designed to be driven by a belt encompassing a pulley on a car-wheel axle, as is readily understood.

From the lever D depends a pivoted beveled hook or catch *f*, the function of which will appear farther on.

F is the gong-hammer, the upper end of the shank of which is pivoted in a bracket or casting *g* on the car-bottom and is provided with two arms *h' h'*, one normally engaging the lever C and the other adapted to engage the catch or hook *f* of the lever D, said shank being connected by a spring *i* to the gong-suspending bracket *a*, holding the hammer when at rest in contact with the gong.

In operation it will therefore be seen that by exerting or applying downward pressure upon the push bar or lever B when the car is in motion, pushing the lever C past or out of engagement with the arm of the hammer-shank, the lever D will be permitted to be intermittently struck by the cam E and the arm *h'* of the gong-hammer caused to engage the hook or catch *f* of the lever D, said action of the cam E upon said lever D effecting the intermittent engagement and disengagement of the arm *h'* of the hammer-shank and the said catch or hook accordingly causing the hammer to produce a series of successive strikes upon the gong, thus giving the required gong-signal. If, however, the car is not in motion, it is plain by exerting quick successive applications of pressure by the foot or otherwise to the upper end of the push bar or lever B the sounding of the gong is effected in this instance by the engagement and disengagement of the lever C and the arm *h'* of the hammer-shank.

Having thus described my invention, what I claim is—

1. The combination, with a car and car-axle, of a cam-wheel connected to and operated by said axle, a lever actuated by said cam, said lever provided with a catch, a spring-hammer provided with an arm to engage with the catch on said cam-lever, and a push bar or lever adapted to engage the arm on and to actuate said hammer, substantially as set forth.

2. The combination, in the car, of a gong with a spring-hammer, said hammer provided with an arm, a push-bar, and a spring-lever interposed between said push-bar and hammer-arm, whereby when said hammer is operated by said push-bar the push-bar is forced

back by said spring-lever, substantially as described.

3. The combination, with the gong, of the push-bar, the cam-actuated lever carrying a catch or hook, the spring-pressed hammer having its shank provided with arms, and the spring-pressed lever interposed between said push-bar and one arm of said shank, the other arm of said shank engaging said catch or hook, substantially as described.

4. The combination, with the gong, the push-bar, the lever carrying a catch or hook, and the cam actuating the latter lever and secured to the shaft or axis, of a pulley adapted to be driven from the car-wheel axle, the spring-pressed hammer having its shank provided with arms, the spring-pressed lever interposed between one arm of said shank, the other arm of said shank engaging said catch or hook, substantially as set forth.

5. The combination, with the gong and the spring-pressed hammer having its shank provided with arms, of the push bar or lever, and mechanism interposed between the arms of the hammer-shank, the push-bar, and the car-wheel axle, whereby the hammer is actuated either directly by the push-bar or the axle, substantially as described, and for the purpose specified.

In testimony whereof I affix my signature in presence of two witnesses.

FRANK M. FARWELL.

Witnesses:
V. F. MASHEK,
JNO. C. KAREL.