June 22, 1943. H. O. PETERSON 2,322,588

TRANSMITTING SYSTEM AND APPARATUS

Filed March 22, 1941 3 Sheets-Sheet 1

Fig. 1

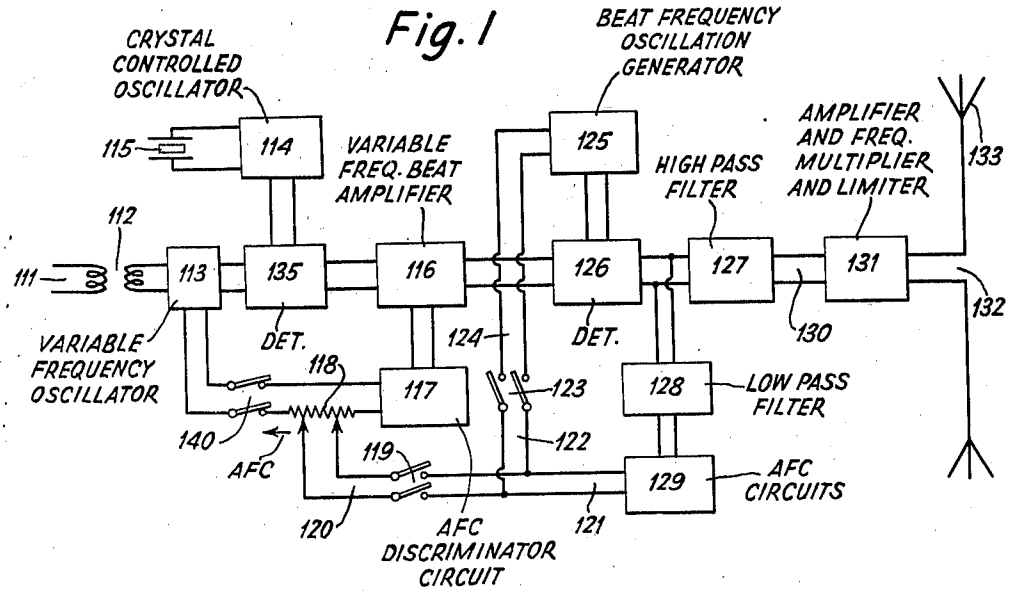

Fig. 3

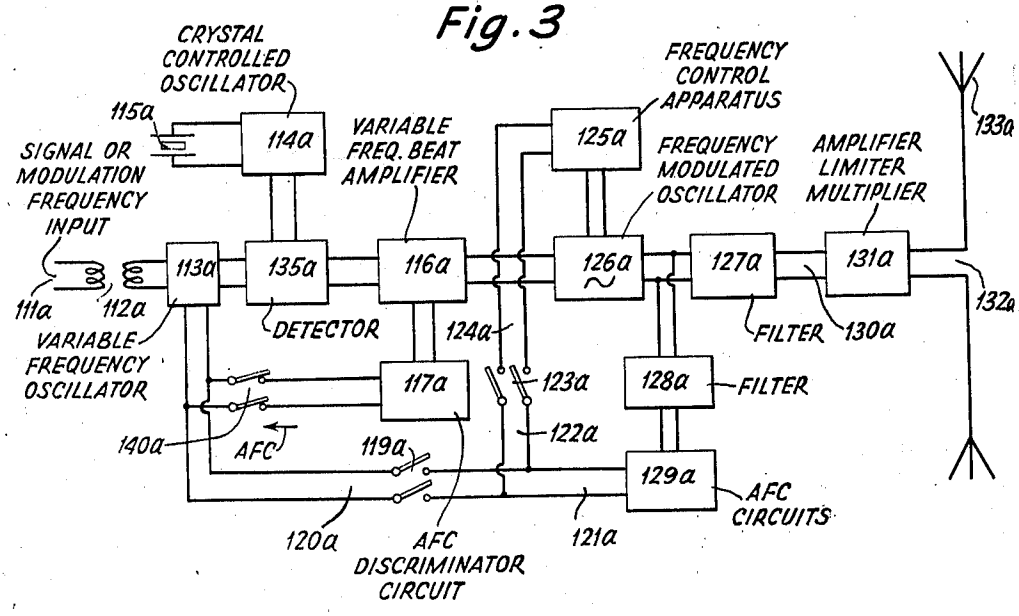

INVENTOR
H. O. PETERSON
BY H. S. Bowen
ATTORNEY

June 22, 1943. H. O. PETERSON 2,322,588

TRANSMITTING SYSTEM AND APPARATUS

Filed March 22, 1941 3 Sheets-Sheet 2

Fig. 2

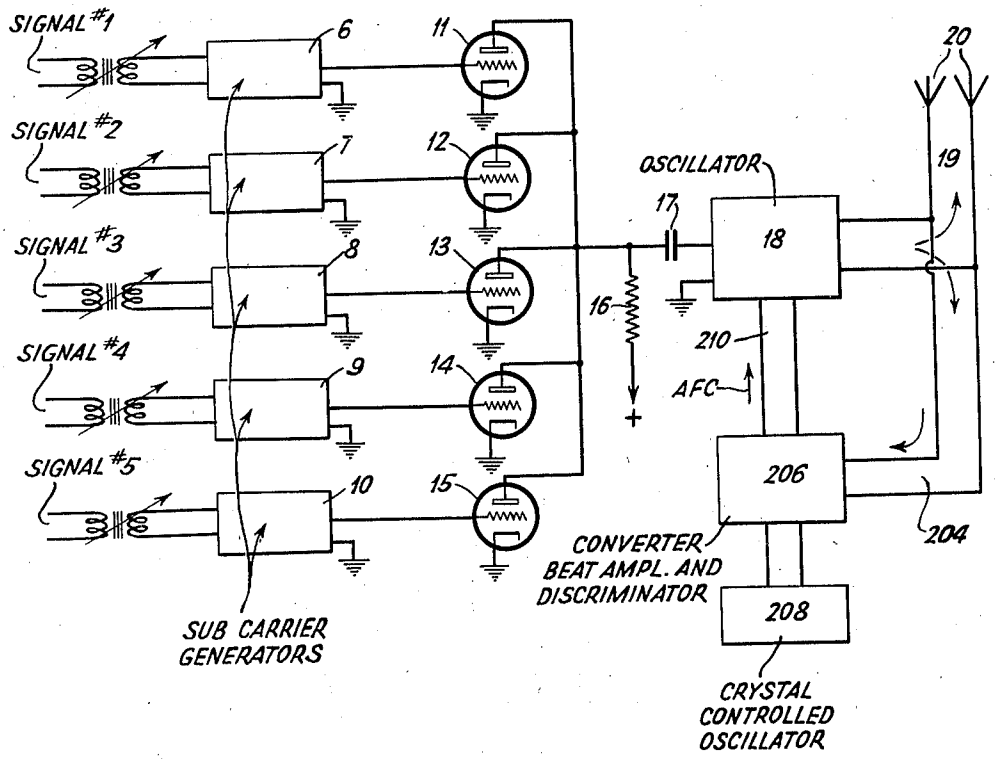

INVENTOR
H. O. PETERSON
BY H. S. Brown
ATTORNEY

June 22, 1943. H. O. PETERSON 2,322,588

TRANSMITTING SYSTEM AND APPARATUS

Filed March 22, 1941 3 Sheets-Sheet 3

Fig. 4

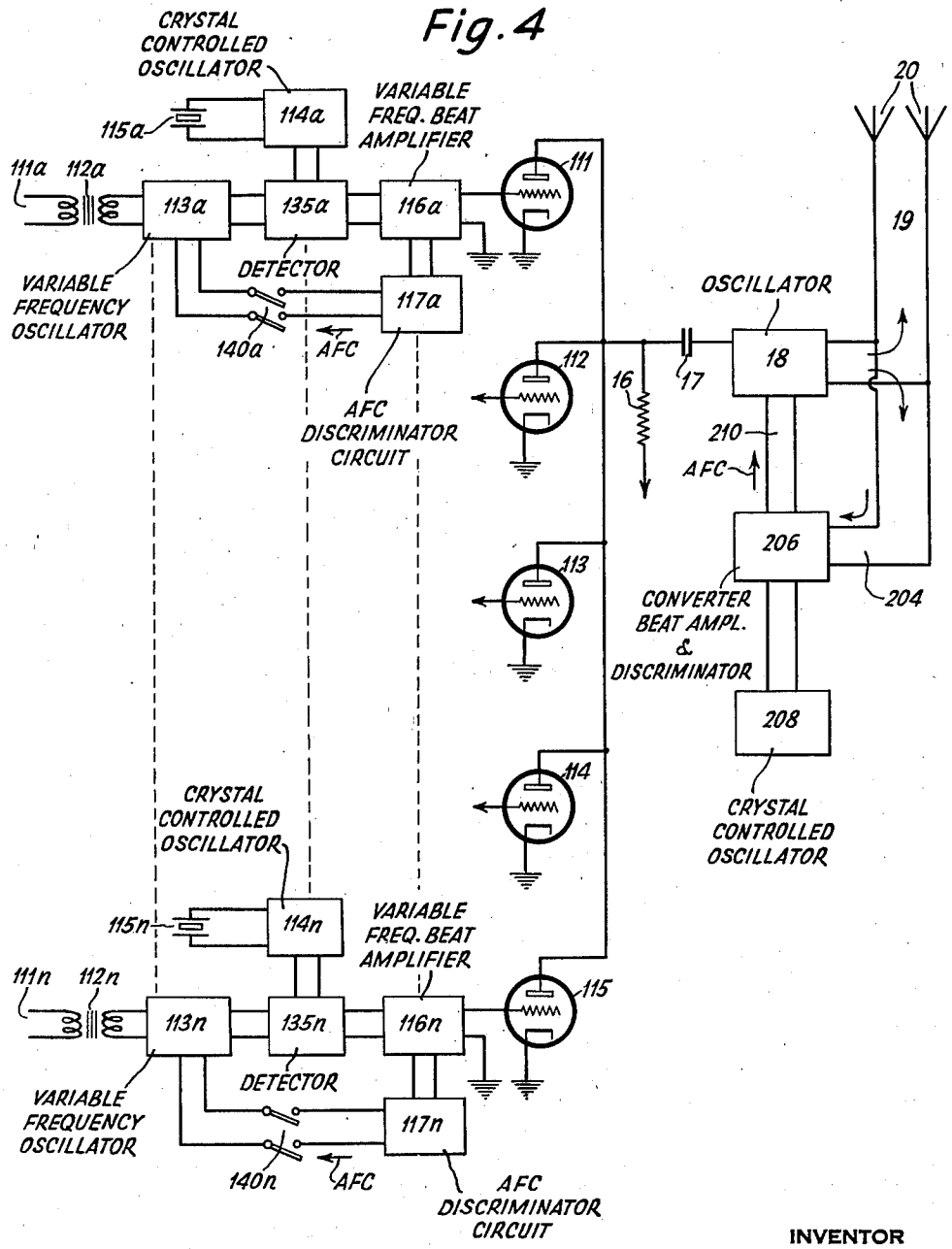

INVENTOR
H. O. PETERSON
BY
ATTORNEY

Patented June 22, 1943

2,322,588

UNITED STATES PATENT OFFICE

2,322,588

TRANSMITTING SYSTEM AND APPARATUS

Harold O. Peterson, Riverhead, N. Y., assignor to Radio Corporation of America, a corporation of Delaware

Application March 22, 1941, Serial No. 384,628

11 Claims. (Cl. 250—17)

This application is a continuation in part of my copending application Serial No. 341,285, filed June 19, 1940 now U. S. Patent #2,298,409, dated October 13, 1942.

My present invention relates to transmitting systems and apparatus.

Among the objects of my invention are to provide an improved sub-carrier transmitting system, to provide an improved system for maintaining a transmitter on its assigned frequency, and to provide an improved automatic frequency controlling system especially applicable to transmitters employing sub-carrier frequency modulation. Other objects, advantages and features of my invention will be apparent as the more detailed description thereof proceeds.

Referring to the drawings:

Figure 1 illustrates a transmitting system employing various features of my invention including sub-carrier frequency modulation and automatic frequency control;

Figure 2 is an arrangement similar to Figure 1 especially useful for multiplexing; and

Figure 3 is a modification of the system illustrated in Figure 1.

My present invention, as applied to a single channel, is shown in Figure 1. The voice or other signal coming in at 111 is fed through transformer 112 to vary the frequency of a variable frequency high frequency oscillation generator 113. The variable frequency oscillations from 113 are fed into a converter or detector 135 also supplied from an oscillation generator 114 controlled in frequency by crystal 115 or by any other suitable frequency controlling element such as a resonant line.

Of the variable frequency beat waves, either the upper or the lower side band, as preferred, is filtered out and amplified in the filter-amplifier 116. The output of amplifier 116, therefore, represents a true frequency modulated sub-carrier wave which in turn is fed into a further converter or detector 126 supplied with still higher frequency waves from high frequency beating oscillation generator 125. The second beating or heterodyning process occurring in 126 produces upper and lower side bands, the upper one of which, representing a true frequency modulated wave, is fed through high pass filter 127 and transmission line 130 to amplifier and/or frequency multiplier and/or limiter 131, in turn feeding antenna 133 through transmission line 132.

The lower side band resulting from the detection process in detector 126 is fed through a low pass filter 128 which in turn supplies amplifier and automatic frequency controlling or discriminating circuits 129, of the type described for example in Seeley Patent No. 2,121,103. Should there be a drift in frequency away from the channel assigned to the transmitter, the frequency controlling voltages arising across the output of discriminator circuit 129 are fed through lines 122, switch 123 and transmission lines 124 to the high frequency oscillation generator 125 to vary the frequency thereof in such a direction as to bring the transmitter back to its assigned channel, i. e., so that there is no voltage drop across the output terminals of the discriminator circuit 129.

As an additional control, switch 119 may be closed and the A. F. C. voltages inserted through transmission line 120 into resistor 118 to vary the frequency of oscillation of the variable frequency oscillation generator 113.

Also, the variable frequency beat from amplifier 116 may be fed to a similar frequency discriminating detector circuit or automatic frequency controlling circuit 117 for automatically frequency controlling the oscillation generator 113 to bring the beat frequency of the sub-carrier appearing in the output circuit of amplifier 116 back to the desired sub-carrier frequency channel. Apparatus 117 may also be of the type described in Seeley Patent No. 2,121,103. Obviously, various combinations of the automatic frequency controlling system may be used. Switches 123 and 119 may be opened, nullifying the A. F. C. action of circuit 129. On the other hand, switch 123 may be kept closed, switch 119 open and also switch 140 may be left open, in which event only the A. F. C. system 129 will be operative. Or, 123 and 119 may be left open and the system operated with only 140 closed. Or, switches 140 and 123 may be closed and switch 119 left open. Or, all three switches may be left open.

The output of 116 may be of any desired mean frequency depending, of course, upon the frequencies of operation of 113 and 114 and whether the beat passed is the sum or difference frequency of 113 and 114. Thus, the output of 116 may be made to lie in the audible, super-audible or radio frequency ranges, as desired.

As an alternative, 126 may represent a high frequency oscillation generator which is directly frequency modulated from the sub-carrier waves coming from 116. In this event, filters 128 and 127 would be identical, each passing the same band of frequencies. Apparatus 125 would represent apparatus for frequency controlling or varying the frequency modulated oscillator 126. This alternative arrangement is illustrated in Figure 3.

Referring to Figure 3, voice or other signal coming in at 111a is fed through transformer 112a to vary the frequency of a variable frequency high frequency oscillation generator 113a. The variable frequency oscillations from 113a are fed into a converter 135a also supplied from an oscillation generator 114a frequency

controlled by crystal 115a or by any other suitable controlling element such as a resonant line. The variable frequency beat, either the upper or the lower side band as preferred, is filtered out and amplified by the amplifier 116a. The output of amplifier 116a, therefore, represents a true frequency modulated sub-carrier wave which in turn is used to frequency modulate oscillator 126a. One portion of the output of oscillator 126a is fed through filter 127a and transmission line 130a to amplifier and/or frequency multiplier and/or limiter 131a, in turn feeding antenna 133a through transmission line 132a. Another portion of the frequency modulated output of 126a is fed through filter 128a which in turn supplies amplifier and automatic frequency controlling or discriminating circuits 129a of the type described, for example, in Seeley Patent No. 2,121,103. Should there be a drift in frequency away from the channel assigned to the transmitter, the frequency controlling voltages arising across the output of discriminator circuit 129a are fed through lines 122a, switch 123a and transmission lines 124a to frequency control apparatus 125a to vary the frequency of oscillator 126a, operating at a much higher frequency than oscillator 113a, in such a direction as to maintain the transmitter back to its assigned channel, i. e., so that there is no voltage drop across the output terminals of the discriminator circuit 129a.

As an additional control, switch 119a may be closed and the A. F. C. voltages inserted through transmission line 120a to vary the frequency of oscillation of the variable frequency oscillation generator 113a.

Also, the variable frequency beat from amplifier 116a may be fed to a similar frequency discriminating detector circuit or automatic frequency controlling circuit 117a for automatically frequency controlling the low frequency oscillation generator 113a to bring the beat frequency of the sub-carrier appearing in the output circuit of amplifier 116a back to the desired sub-carrier frequency channel. Obviously, various of the automatic frequency controlling systems may be used together or switches 123a and 119a may be opened, nullifying the A. F. C. action of circuit 129a. On the other hand, switch 123a may be kept closed, switch 119a open and also switch 140a may be left open, in which event only the A. F. C. system 129a will be operative. Or, the system may be operated with 123a and 119a open and only 140a closed. Or, it may be operated with 123a and 119a closed, but with 140a open. Or, it may be operated with all these switches open.

Figure 2 is similar to the transmitting arrangements of Figures 3 and 4 of my parent application Serial No. 341,285, filed June 19, 1940, now U. S. Patent #2,298,409, dated October 13, 1942, with, however, automatic frequency control applied.

In Figure 2, five different signals, such as voice, tone, telegraph, facsimile, etc. or any combination thereof, are used to individually frequency or phase modulate sub-carrier generators 6, 7, 8, 9, 10 each operating at a different mean frequency. The modulated outputs of the sub-carrier generators 6 to 10 inclusive are fed through coupling tubes 11 to 15 inclusive, combining resistor 16 and condenser 17 to oscillation generator 18. The combined signals fed through condenser 17 are used to phase or frequency modulate oscillator 18. The output of the oscillator 18 may be amplified, frequency multiplied and limited, as desired, and then fed through transmission line 18 to a radiating antenna 20.

Part of the output of the transmitting system is fed through lines 204 to a converter beat frequency amplifier and frequency discriminating circuit 206. The converter 206 is also supplied with oscillations from a crystal or other constant frequency oscillation generator 208. The automatic frequency controlling voltages arising in transmission line 210 are used to automatically frequency control the frequency modulated oscillator or generator 18.

Figure 4 is an arrangement similar to Figure 2 with the exception that automatic frequency control is applied to each sub-carrier. Thus, each sub-carrier unit of the "n" channels is made up of an input transformer 111, 112, a variable frequency oscillator 113, a crystal controlled oscillator 114, 115, a detector 135, a variable frequency beat amplifier 116 and an automatic frequency control system 117, 140. The output of each unit 116 is made to be a different frequency which are applied, respectively, to the grids of coupling tubes 111 to 115 inclusive, corresponding to the coupling tubes 11 to 15 of Figure 2 in order to phase or frequency modulate oscillator 18. In this way, each sub-carrier generator would be provided with its own frequency regulating system to insure that the proper sub-carrier frequency is used on each channel. This precaution is particularly important where the sub-carrier channels are quite narrow in comparison with the sub-carrier frequencies.

The systems of Figures 1, 2 and 3 and 4 for automatically frequency controlling the transmitting end of the signaling system may be applied also when the sub-carrier generators 113, 113a and 6–10 are phase modulated and the main carrier 18, 126 and 126a are also phase modulated; or when the sub-carriers are frequency modulated and the main carrier phase modulated, or when the sub-carrier frequencies are phase modulated and the main carrier frequency modulated, or when the sub-carrier frequencies are amplitude modulated and the main carrier frequency modulated, or when the sub-carrier frequencies are amplitude modulated and the main carrier phase modulated, or when the sub-carrier frequencies are frequency modulated and the main carrier is amplitude modulated; or when the sub-carrier frequencies are phase modulated and the main carrier is amplitude modulated.

The variable frequency oscillators 113, 113a, 126a and 6–10 inclusive when frequency modulated are of the type shown in Figure 1 of my Patent No. 1,789,371, in Figure 4 of Hansell Patent No. 1,819,503, or as described in Lindenblad Patent No. 2,143,891. Or they may be of any other suitable type. When phase modulated, these oscillators and the modulating circuits therefor are of the type described in Roberts Patent No. 2,050,067, Crosby Patent No. 2,033,231, Day Patent No. 1,885,009. Or other types of phase modulators may be employed. When amplitude modulated, the circuits of Heising Patent No. 1,936,162 or of Davis Patent No. 1,744,214 may be employed.

Also, all of the frequency controlling apparatus for either frequency control or modulation, and as diagrammatically illustrated at 125a in Figure 3, may be of the reactance tube type as described by M. G. Crosby in a paper entitled "Reactance Tube Frequency Modulators" appearing in the RCA Review for July, 1940.

In connection with the multiplex systems described hereinabove, such as shown in Figure 4, various types of signals may be simultaneously transmitted. For example, there may be several teletype circuits 100 cycles wide, several high fidelity broadcast channels each 30 kilocycles wide, several ordinary voice or cue channels each 3 kilocycles wide and there may be several facsimile channels provided, each 25 kilocycles wide. The parameters for the various channels are adjusted in accordance with the teachings of my parent application referred to hereinabove as regards signal-to-noise levels, etc.

Having thus described my invention, what I claim is.

1. In a transmitting system, a generator of variable frequency, a generator of constant frequency, means for varying the frequency of waves generated by the variable frequency generator in accordance with a signal, means for beating the variable frequency waves so produced against waves derived from said constant frequency generator, means for heterodyning a portion of the beat waves to a still higher frequency and transmitting the same, and means for utilizing another portion of the beat frequency waves to automatically frequency control said variable frequency oscillation generator.

2. In combination, a pair of generators, means for varying the frequency of waves generated by one of said generators in accordance with a signal, means for beating together waves from the other generator and the generator whose frequency has been varied, means for heterodyning the resultant beat to a still higher frequency and for transmitting said high frequency beat, and means for utilizing a portion of said transmitted high frequency beat to automatically frequency control said variable frequency generator.

3. Apparatus as claimed in the preceding claim, characterized by the fact that a portion of the high frequency beat which is transmitted is employed to automatically frequency control the oscillator of the heterodyning system.

4. In combination, a constant frequency oscillator, a variable frequency oscillator, means to vary the frequency of the variable frequency oscillator, means for beating together the outputs of said oscillators, means for heterodyning the resulting variable frequency beat to a high frequency, means utilizing the lower side band of the heterodyned waves to automatically control the mean frequency of the variable frequency beat subjected to heterodyning, and means for transmitting the upper side band of the heterodyned waves.

5. In combination, a pair of wave generators, means for varying the frequency of one of the generators with respect to the other by a signal wave, means for beating the outputs of the wave generators together, means for utilizing a portion of the beat waves to automatically frequency control one of said wave generators, and means including a third wave generator for heterodyning another portion of the beat waves to a still higher frequency and for transmitting the beat.

6. In combination, an oscillation generator, means for varying the frequency thereof in accordance with a signal wave, means for using the resulting frequency varied waves to vary the frequency of a high frequency oscillation generator, means for transmitting a part of the output of said high frequency oscillation generator, and means for utilizing another part of the output of said frequency varied high frequency oscillation generator to automatically frequency control the operation of at least one of said generators.

7. An arrangement as recited in claim 5 including, a circuit coupled to said heterodyning means and responsive to a portion of the waves resulting from the action of the heterodyning means for producing a potential characteristic of deviations in the mean frequency of said wave energy, and a control circuit excited by said potentials for automatically controlling the frequency of at least one of said generators.

8. In a signalling system, a source of wave energy the wave length of which has been modulated in accordance with signals, an oscillation generator, a converter circuit coupled to said oscillation generator and to said source of wave length modulated wave energy, a sideband filter coupling said converter to transmitting means, and an automatic frequency control circuit comprising a frequency discriminating circuit and a rectifier excited by wave energy from said converter for controlling the mean frequency of the wave length modulated wave energy supplied by said converter to said filter.

9. A system as recited in claim 8 wherein said side band filter passes one sideband and wherein said frequency discriminator is tuned to the other sideband.

10. In a signalling system, a source of wave energy, a detector, means for impressing wave length modulated wave energy on said detector, means for impressing wave energy from said source of wave energy on said detector whereby wave length modulated wave energy comprising upper and lower sidebands appears in the output of said detector, a filter tuned to the upper sideband connected with said detector for supplying said upper sideband to translating means, a lower sideband filter coupled to said detector, a frequency discriminator and a rectifier coupled to said lower sideband filter, a control circuit coupling said discriminator and rectifier to said source of wave energy for controlling the mean frequency thereof in accordance with deviations in the mean frequency of the wave energy at the output of said detector, and means coupled with said discriminator and rectifier for controlling the mean frequency of the wave length modulated wave energy supplied to said detector in accordance with said deviations.

11. In a signalling system, circuits for producing wave energy the length of which is modulated by signals and the mean frequency of which is stabilized in accordance with slow deviations in the mean frequency of the wave energy, other circuits for producing other wave energy and heterodyning the said other wave energy with the stabilized wave length modulated wave energy to produce wave energy of a third frequency, and additional circuits for controlling the mean frequency of the other wave energy in accordance with deviations in the mean frequency of the wave energy of said third frequency.

HAROLD O. PETERSON.