A. J. SIEDLE & J. H. R. YARDLEY.

STAMP AFFIXING INSTRUMENT.

APPLICATION FILED APR. 9, 1913.

1,130,205.

Patented Mar. 2, 1915.

2 SHEETS—SHEET 1.

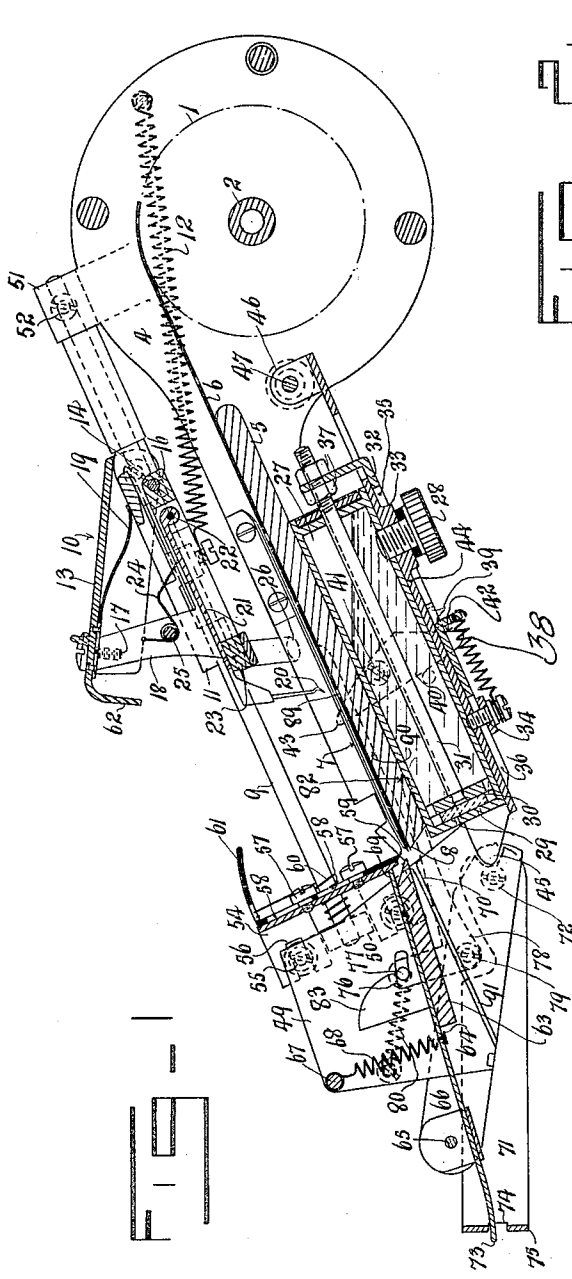

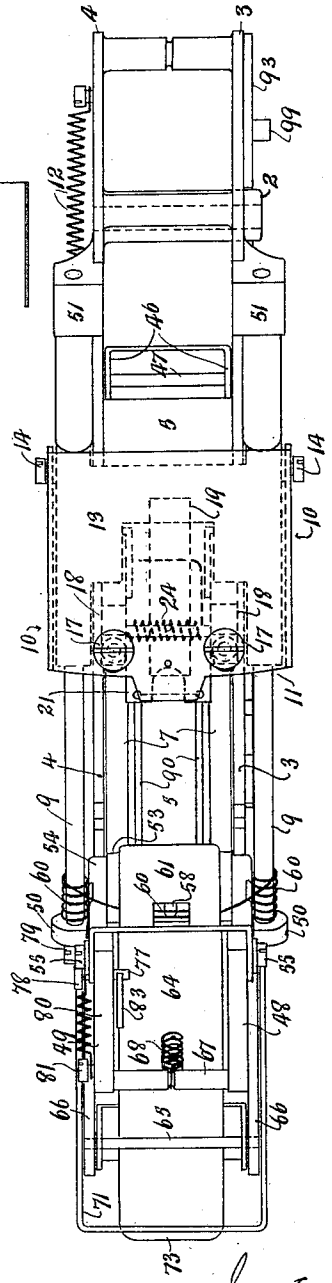

Witnesses:

P. A. Putnam

A. C. Barkley.

Inventors:

Adolph Joseph Siedle &

John Henry Reginald Yardley,

by Francis Lincoln, atty

THE NORRIS PETERS CO., PHOTO-LITHO., WASHINGTON, D. C.

A. J. SIEDLE & J. H. R. YARDLEY.

STAMP AFFIXING INSTRUMENT.

APPLICATION FILED APR. 9, 1913.

1,130,205.

Patented Mar. 2, 1915.

2 SHEETS—SHEET 2.

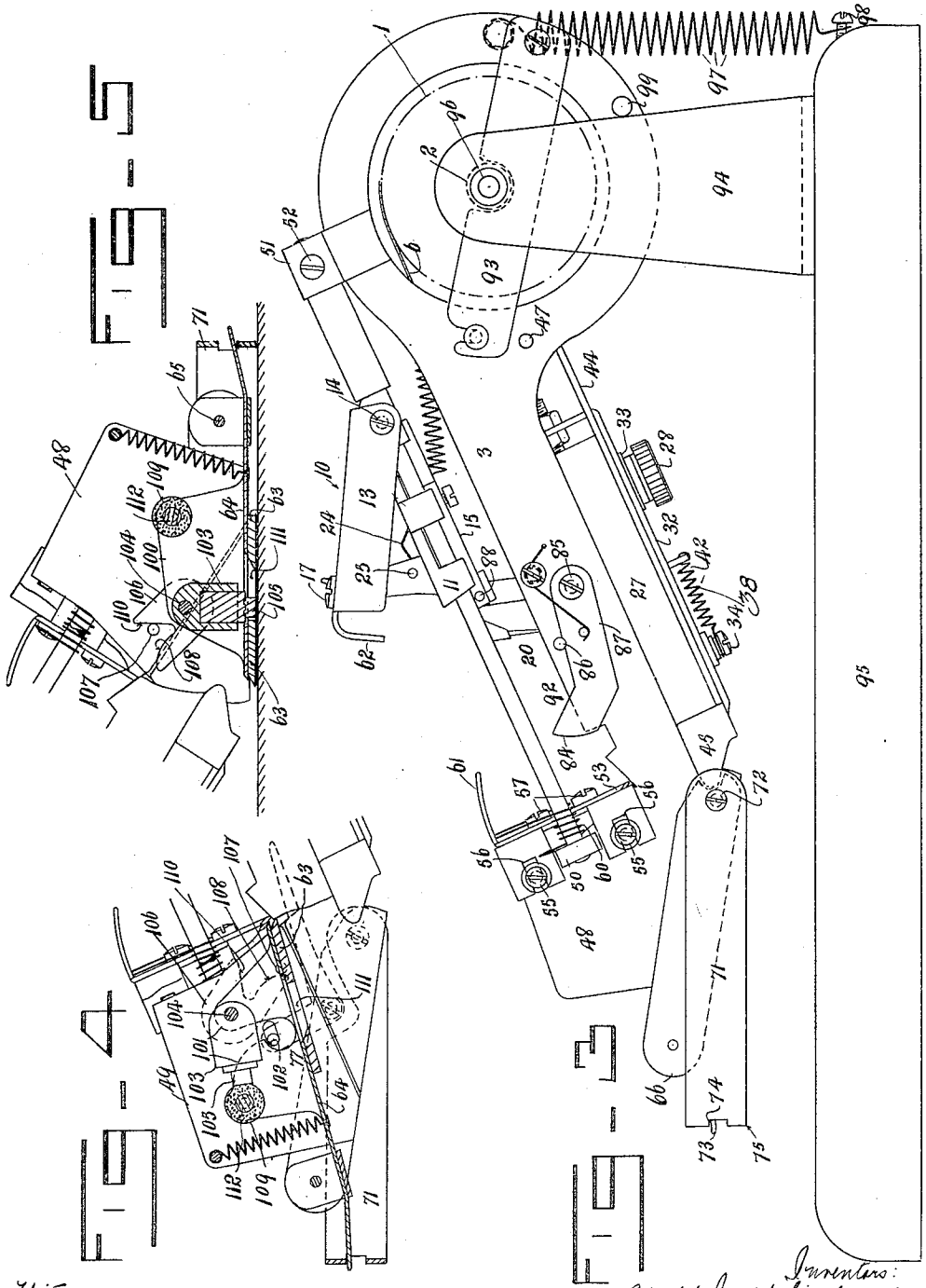

Witnesses:
C. A. Putnam.
L. E. Barkley.

Inventors:
Adolph Joseph Siedle and
John Henry Reginald Yardley.
by Frank Cameron, atty.

THE NORRIS PETERS CO., PHOTO-LITHO., WASHINGTON, D. C

UNITED STATES PATENT OFFICE.

ADOLPH JOSEPH SIEDLE AND JOHN HENRY REGINALD YARDLEY, OF LONDON, ENGLAND.

STAMP-AFFIXING INSTRUMENT.

1,130,205. Specification of Letters Patent. Patented Mar. 2, 1915.

Application filed April 9, 1913. Serial No. 760,031.

To all whom it may concern:

Be it known that we, ADOLPH JOSEPH SIEDLE, engineer, of 43 Cannon street, London, England, and JOHN HENRY REGINALD YARDLEY, captain, of 145 St. Stephen's House, Westminster, London, England, have invented certain new and useful Improvements in Stamp-Affixing Instruments, of which the following is a specification.

This invention relates to an improved stamp affixing instrument and has reference to machines or instruments which, at a single operation, feed a stamp from a strip, sever it and affix it to a surface which has by the operation of the machine been supplied with moisture.

An important feature of the present invention consists in that the machine is of a form which enables it to be grasped in one hand and the whole of its operations are effected and controlled by the one hand, the thumb of which operates the feeding and severing means, while the affixing operation is effected by a slight bodily movement of the machine as will hereafter be made clear. The machine may be gripped somewhat after the fashion of a revolver and the natural gripping pressure utilized to operate it. At each operation a supply of moisture is ejected on to the surface to which the stamp is to be applied just before the affixing of the stamp takes place.

In some cases we propose to combine with the machine a franking mechanism to enable the stamps to be affixed and canceled at practically one and the same time.

One practical embodiment of our invention is illustrated in the accompanying drawings wherein:—

Figure 1 is a sectional side elevation of the improved stamp affixing machine showing the stamp strip in position for feeding. Fig. 2 is a plan view of the machine with the stamp strip removed. Fig. 3 is a side elevational view of the machine and shows it mounted upon a suitable base or support, while Fig. 4 illustrates a modification wherein a franking device is combined with the affixing pad and operates to cancel the stamp as the latter is affixed. Fig. 5 is a detailed view of a modified form of the affixing mechanism.

Referring to these drawings, wherein like numerals of reference indicate corresponding parts wherever occurring, 1 designates a stamp roll loosely mounted upon a spindle or sleeve 2 and situated between the side plates 3 and 4 of the instrument. Rigidly mounted between these side plates is a flat bed 5 over which the stamp strip 6 passes after leaving the roll 1. A pair of narrow leaf springs 7 attached to the side plates 3 and 4 coöperate with the bed 5 to guide the stamp strip 6, the extreme end of which is normally flush with the edge 8 of said bed.

Mounted upon the side plates 3 and 4 and parallel to the bed 5 are a pair of guide rods 9 upon which is slidably mounted a stamp feeding carriage 10 constructed in the following manner: The main frame 11 of the feeding carriage slides upon the guide rods 9 and under the influence of a spring 12 anchored to the side plate 4 normally assumes the position shown in the drawings. A thumb plate 13 is pivoted to the main frame at 14 and a secondary frame 15 is also pivoted to it at 16. This secondary frame 15 is suspended from the thumb plate 13 by means of screws 17 which enter lugs 18 on the said frame and by reason of the leaf spring 19, coöperating with the main frame 11, the two are constrained to assume the position shown. It will be seen that if the thumb plate 13 be depressed, relative movement will take place between the said plate and the lugs 18; this is provided for by elongating the holes in the thumb plate through which the screws 17 pass. The stamp feeding pins 20 preferably of the form illustrated are carried upon a plate 21 pivoted at 22 to the frame 15 and resting upon the forward end 23 thereof. A spring 24 mounted upon a spindle 25 between the lugs 18 acts on the top of the plate 21 and tends to prevent it from being raised. A striker 26 mounted on the frame 15 is adapted to operate the damping mechanism and release the affixing pad in the manner hereinafter set forth.

The damping mechanism comprises a water tank 27 provided with a filling screw cap 28 and suitably located perforations 29 through which water may be ejected on to the surface to which the stamp is to be affixed. A plunger 30 is mounted upon a

rod 31 and is adapted to be reciprocated within the tank for the purpose of ejecting the water. A plate 32 slides on the bottom or base plate of the tank 27 and is guided by the boss 33 and the screw 34 which respectively coöperate with slots 35 and 36 in the said plate for this purpose. This sliding plate 32 is adjustably connected as at 37 to the plunger rod 31 and is drawn by a spring 38 anchored to the screw 34 in such a direction as to force the plunger 30 up against the perforated end of the tank. The sliding plate 32 is furnished with a lug 39 (indicated by dotted lines in Fig. 1) and a lever 40 is pivoted to the side plate 4 at 41. One end 42 of this lever contacts the lug 39 and the striker 26 on the frame 16 engages the other end 43 thereof during the period when the carriage 10 is being operated to feed the stamp.

In order to facilitate the filling of the tank 27 it is made readily detachable from the rest of the machine. To this end it is mounted upon a base plate 44 from one end of which rise two pointed lugs or projections 45 parallel to the sides of the tank. These projections enter corresponding V-shaped notches in the side plates 3 and 4. The other end of the base plate 44 has two upwardly extending lugs 46 and a removable pin 47 passing through the side plates 3 and 4 and also through these lugs serves to secure the tank in position.

Those ends of the side plates 3 and 4 remote from the stamp roll are extended upwardly in the form of walls 48 and 49 upon and between which the severing and affixing mechanism is disposed. Lugs 50 upon these walls receive the ends of the two guide rods 9 whose other ends are accommodated in the lugs 51 and held against longitudinal movement by the set screws 52.

The severing knife 53 is carried upon a saddle piece 54 secured to the walls 48 and 49 by screws 55 and adjustable by reason of the slots 56 through which the said screws pass. It is slidably attached to the saddle piece 54 by the screws 57 and is adapted to travel up and down thereon by virtue of the slots 58. This knife 53 is so adjusted that its cutting edge 60 can coöperate with the edge 8 of the bed 5 to sever the stamp strip and springs 60 preferably carried on the guide rods 9 and acting on the under side of the projecting lug 61 normally keep the knife raised to such a position that the stamp strip may pass underneath it.

In the operation of the machine it is depressed to sever the stamp strip by means of a downwardly projecting lug 62 on the forward edge of the thumb plate 13. This lug can only come into contact with the lug 61 after the pins 20 have passed over the edge 8 of the bed 5 when they are free to descend in front of said edge. Suitable channels are cut in the face of the knife 53 to permit the said knife also to descend as aforesaid without fouling the pins.

The affixing pad 63 is carried by a plate 64 pivoted upon a spindle 65 between the fittings 66 on the walls 48, 49. A rod 67 connecting these walls serves as an anchorage for the spring 68 which tends to raise the plate 64 so that the stamp may pass beneath the pad 63. This upward motion may be limited by a stop or by the end 69 of the plate contacting with the slightly inclined surface 70 on the saddle piece 64. A fitting 71 is pivoted at its two extremities to the side plates 72 and the plate 64 is extended beyond the pivotal spindle 65 to form a tail piece 73 which engages a slot 74 in the yoke portion of this fitting.

It will be seen that if pressure be applied to the edge 75 of the fitting 71 it will tend to rotate about its pivotal points 72 and in so rotating to raise the tail piece 73 and correspondingly depress the pad 63 until the said pad meets with some obstruction such as the surface to which the stamp is to be affixed. It is of course desirable that the pad should not descend until the stamp has been severed and to this end the plate 64 is furnished with a hook 76 which normally engages a pin 77. This pin is mounted upon one arm of a bell crank lever 78 pivoted at 79 to the wall 49 and held in the position shown by a spring 80 anchored at 81. The pin 77 is disengaged from the hook 76 by depressing the end 82 of the bell crank lever 78. The upper edge 83 of the hook 76 is contoured to form a cam and in the event of the pin 77 being permitted to return before the plate 64 the cam edge will temporarily displace the said pin and permit the hook to return to its normal position. A cam plate 84 is pivoted at 85 to the side plate 3 and is normally held up against the stop 86 by a spring 87. This cam plate coöperates with a pin 88 on the frame 15 to raise the feeding pins 20 clear of the stamp strip on the return journey of the feeding carriage 10.

The operation of the machine to affix a stamp will now be described, mainly with reference to Fig. 1 of the drawings, which figure shows the stamp strip in position, ready to be fed forward.

The machine is gripped at the end occupied by the stamp roll and the edge of the fitting 71 is pressed against some part of the surface to which the stamp is to be affixed. Pressure is now applied in a downward and forward direction to the thumb plate 13. Thus the feeding pins 20 are brought into contact with the stamp strip 6 over which they ride, compressing the spring 24, until they reach the perforations 89, which they enter, under the influence of said spring, passing through into grooves

90 cut in the bed 5 for their accommodation. The stamp strip is now firmly engaged on the feeding pins and so travels forward with the feeding carriage. As the stamp strip passes off the edge 8 of the bed its two edges engage in shallow guide slots 91 cut in the walls 48 and 49. The initial depression of the thumb plate 13 brings the striker 26 into line with the end 43 of the lever 40. Thus the striker in its travel turns the said lever about its pivot 41. The end 42 of the lever acting against the lug 39 forces the sliding plate 32 to the right and with it the plunger 30. The spring 38 returns the various parts when the striker 26 has passed on and the plunger on its return ejects water through the holes 29 on to the surface to which the stamp is to be affixed. During the feeding of the strip the spring controlled cam plate 84 is forced out of the way by the pin 88 acting against the inclined edge 92 and the carriage travels on unimpeded until the feeding pins 20 pass off the edge 8 of the bed, when the stamp is in position for severance. The thumb plate can now be further depressed and the lug 62 contacts the lug 61 and depresses the severing knife 53 in opposition to the springs 60 causing the said knife to sever the stamp strip on the line of perforations. After severance has taken place the striker 26 contacts the end 82 of the bell crank lever 78 and thus disengages the pin 77 from the hook 76 in the manner above described. The fitting 71 is now free to turn about the pivots 72 and a slight upward movement of the body of the machine combined with pressure upon the edge 75 effects this rotation and causes the affixing pad 63 to descend, sweep the severed stamp free of the guide slots 91 and affix it to the moistened surface. On the return journey of the carriage 10 under the influence of the spring 12 the thumb plate 13 first rises until the feeding pins 20 are clear of the bed 5 and the stamp strip lying thereon. The pin 88 traveling upon the edge of the cam plate 84 insures this clearance before the carriage is permitted any appreciable backward travel. This prevents the feeding pins from touching the stamp strip on the return journey and also permits the striker to pass clear of the lever 40. In loading the machine with stamps the pivoted plate 93 is first swung aside to permit the stamp roll 1 to be placed upon the sleeve 2 and when replaced returns the said roll in position between the side plates 3 and 4.

An alternative method of using the machine is illustrated in Fig. 3 where it is shown mounted between a pair of standards 94 upon a bed plate or table 95 upon which is laid the article to which the stamp is to be affixed. A removable spindle 96 passes through suitably placed holes in the standards 94 and through the bore of the sleeve 2 while a spring 97 anchored at 98 raises the remote end 75 of the machine above the bed plate. The height to which it is raised is limited by a stop 99 and is such that the proper action of the fitting 71—and therefore of the pad—will automatically take place when the carriage 10 is operated in the manner hereinbefore set forth.

Figs. 4 and 5 illustrate the application to our improved affixing machine of a franking mechanism which operates automatically to cancel the stamp as the latter is affixed by the affixing pad. Fig. 4 shows the affixing and franking mechanism in the position which it normally occupies when the machine is not in use, while, Fig. 5 shows the same mechanism operating to affix and cancel a stamp. According to this slightly modified construction the pivoted plate 64 to which the affixing pad 63 is attached is furnished with two upstanding walls 100 and 101 between which the franking mechanism is carried. The wall 101 is slotted as shown in Fig. 4 to form a hook 102 which takes the place of the hook 76 described in connection with Figs. 1, 2 and 3 and cooperating with the pin 77 to lock the pivoted plate 64 in the manner above described. A fitting 103 is mounted on a spindle 104 journaled in walls 100 and 101 and carries the type 105. Fast upon the same spindle 104 and located outside the wall 100 is a cam plate 106 which engages a pin 107 fixed on the wall 48. When the pad is in its raised or inoperative position as shown in Fig. 4 the edge 108 of the cam plate 106 rests against the pin 107 and the type 105 is then in contact with the surface of an inking roller 109 also mounted between the walls 100 and 101. When the pad is released and descends to affix the stamp the franking mechanism is, of course, carried downward with it, but before it has completed its travel the edge 110 of the cam plate 106 contacts the pin 107. As this cam edge slides over the pin in the further descent of the pad it rotates the spindle 104. Thus the type 105 is brought out of contact with the inking roller 109 and swung around until it passes into the opening 111 cut through the pad 63 and through the pivoted carrying plate 64 for its accommodation. Shortly before the pad completes its travel the printing surface of the type lies flush or approximately flush with the under surface of the said pad, and finally the two descend together to the position shown in Fig. 5 simultaneously affixing and canceling the stamp. On the return of the pad the pin 107 contacts the cam edge 108 and brings the type back again into contact with the inking roller 109. Any suitable means may be adopted for rendering this roller renewable. Its spindle 112 may for instance be journaled in suitably inclined slots, or the walls 100 and

101 may be made sufficiently resilient to be "sprung" over the ends of the said spindle.

What we claim and desire to secure by Letters Patent is:—

1. A stamp affixing apparatus comprising a frame, means on the frame for carrying a stamp roll, means for cutting a stamp from the roll, a guide for guiding the stamps to the cutting means, a movable carriage supported by the frame, means carried by the carriage for moving the stamps to the cutting means, means for applying fluid to the article to which the stamp is to be affixed, an affixing means and means operated by the carriage for releasing the affixing means for allowing the same to be operated.

2. A stamp affixing apparatus comprising a frame, a stamp roll supported by the frame, a cutting blade, means for feeding stamps to the blade, a thumb carriage operating on the frame, a cylinder, a piston in the cylinder, and means operated by the thumb carriage for moving the piston in the cylinder, whereby water is forced from the cylinder.

3. A stamp affixing apparatus comprising a frame, a stamp roll supported on the frame, a stamp feeding board, a thumb carriage operating above the feeding board, a knife for severing stamps from the roll, pins carried by the thumb carriage for engaging the stamps and moving the same to the knife, a cylinder, a piston operating in the cylinder, means operated by the movement of the thumb carriage for operating the piston and forcing fluid from the cylinder, and means for affixing stamps.

4. A stamp affixing apparatus comprising a frame, a stamp roll supported by the frame, a stamp feeding board disposed adjacent the stamp roll, means supported under the stamp board for delivering fluid, a lever pivotally mounted on the frame, one end of the lever being in engagement with the fluid feeding apparatus, a thumb carriage adapted to move on the frame, means for delivering stamps from the stamp roll and means for severing the stamps, and means carried by the carriage for engaging the lever for forcing fluid from the fluid container, and means for affixing stamps.

5. A stamp affixing apparatus comprising a frame, a stamp roll supported by the frame, a carriage movable on the frame, a fluid containing cylinder supported under the frame, a piston in the cylinder, a sliding plate under the cylinder, means for connecting the piston and sliding plate, and means operated by the carriage for operating the piston for forcing fluid from the cylinder.

In testimony whereof we affix our signatures in presence of two witnesses.

ADOLPH JOSEPH SIEDLE.
JOHN HENRY REGINALD YARDLEY.

Witnesses:
MARGARET I. PFEIFER,
JAMES R. PATTISON.

Copies of this patent may be obtained for five cents each, by addressing the "Commissioner of Patents, Washington, D. C."