L. C. GLOVER.

COTTON-GIN FLUES.

No. 193,700. Patented July 31, 1877.

Fig 1

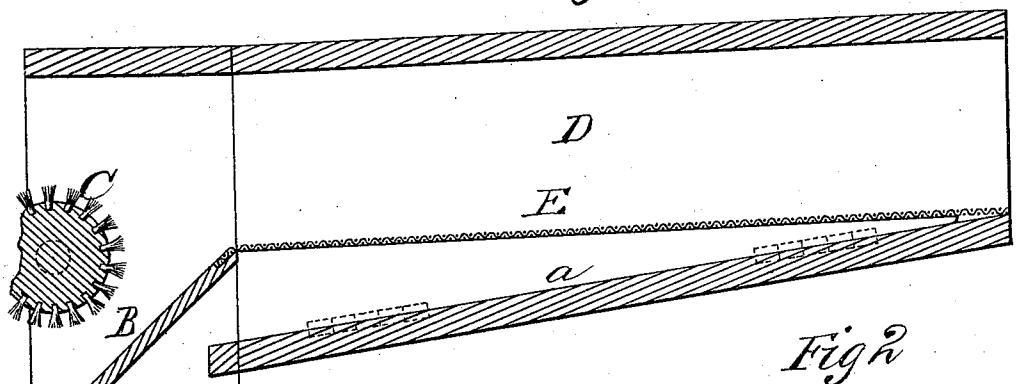

Fig 2

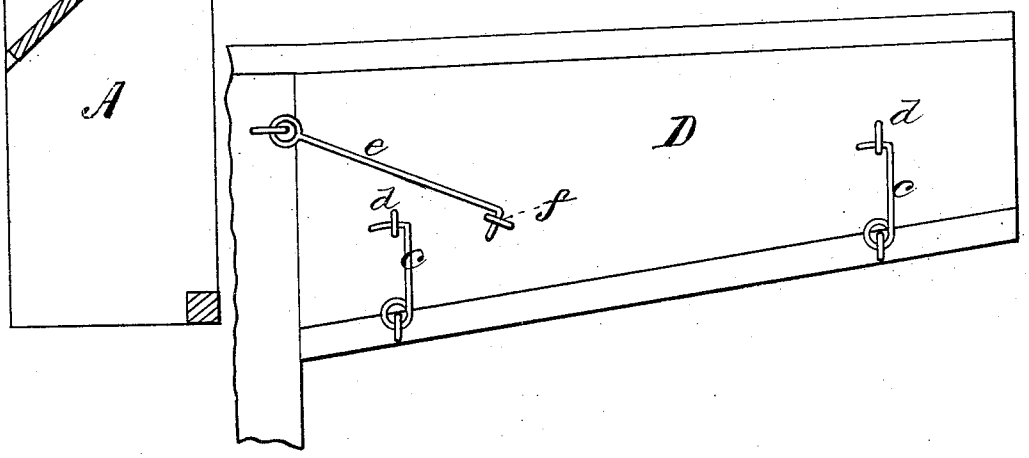

WITNESSES

Villette Anderson.

F. J. Masi

INVENTOR

Locke C. Glover.

by E. W. Anderson,

ATTORNEY,

N. PETERS, PHOTO-LITHOGRAPHER, WASHINGTON, D. C.

UNITED STATES PATENT OFFICE.

LOCKE C. GLOVER, OF GRENADA, MISSISSIPPI.

IMPROVEMENT IN COTTON-GIN FLUES.

Specification forming part of Letters Patent No. **193,700**, dated July 31, 1877; application filed May 19, 1877.

To all whom it may concern:

Be it known that I, LOCKE C. GLOVER, of Grenada, in the county of Grenada and State of Mississippi, have invented a new and valuable Improvement in Cotton-Gin Flues; and I do hereby declare that the following is a full, clear, and exact description of the construction and operation of the same, reference being had to the annexed drawings, making a part of this specification, and to the letters and figures of reference marked thereon.

Figure 1 of the drawings is a representation of a longitudinal vertical section of the flue applied, and Fig. 2 is a side view of the same.

This invention has relation to improvements in flues or conduits which conduct the cotton from the mote-board to the compacting and doffing rollers, whence it is discharged as a bat.

The nature of the invention consists in a flue having an upwardly-inclined hinged bottom, and parallel, or nearly so, to the upper wall of said flue, a reticulated diaphragm, over which the cotton passes on its way to the batting-rollers, and whereby it is deprived of the finer dust or foreign matters that have not been deposited on the mote-board, as will be hereinafter more fully described.

In the annexed drawings, the letter A designates a portion of the gin-frame, wherein the letter B designates the inclined mote-board, and C the brush-cylinder that deprives the teeth of the saws of the fibers of lint. This board will be preferably inclined, and the coarser particles of the foreign matter will fall off therefrom and be discharged into a suitable receptacle provided therefor. D represents a section of a flue, having an inclined bottom, *a*, opening into the gin-frame below the upper edge of the mote-board. This flue is provided in any suitable manner with a reticulated separating-screen, E, the outer end of which is flush with the discharge end of the lower wall of the flue, and its inner end flush, or nearly so, with the upper edge of the mote-board. By this means the screen is made horizontal, and a space is formed below said screen, in which the foreign matter will be received, and from which it will descend below the mote-board into the receptacle for the refuse falling therefrom.

The lint, on its passage to the doffing or compacting rollers, will be thoroughly deprived of dust and other fine foreign materials by the screen aforesaid, and will be in fine merchantable condition on issuing therefrom.

The inclined bottom *a* of the flue will be hinged to the side thereof, so that it may be swung down for the purpose of cleaning or repairing the screen, or of freeing the said flue of dust. When the bottom is swung up to the flue its free edge will be confined thereto by hooks *c* and eyes *d*, respectively, on the said bottom and the sides of the flue, or by any other suitable catch. This flue will be removably secured to the frame of the gin by means of hooks *e* and eyes *f*.

Having described my invention, what I claim as new, and desire to secure by Letters Patent, is—

The flue or conduit for ginning-machines, having a separating-screen arranged therein, and a hinged bottom below said screen, substantially as specified.

In testimony that I claim the above I have hereunto subscribed my name in the presence of two witnesses.

LOCKE C. GLOVER.

Witnesses:
R. A. COLLINS,
RICHARD R. LAKE.