Feb. 14, 1967 J. E. CRANCH ETAL 3,303,817

XEROGRAPHIC DEVELOPING APPARATUS

Filed Dec. 23, 1963 5 Sheets-Sheet 1

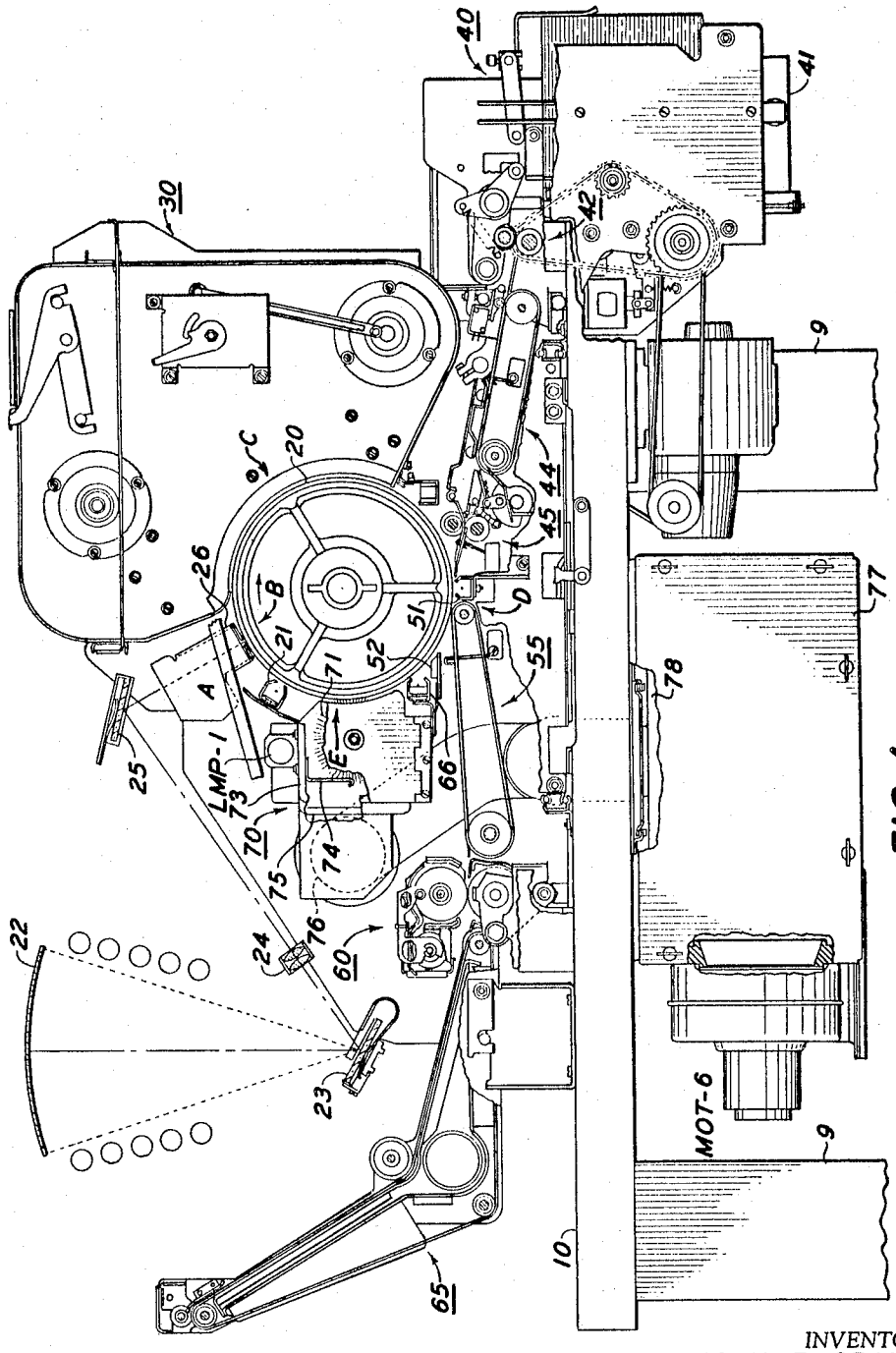

FIG. 1

INVENTORS
JOHN E. CRANCH
LYMAN H. TURNER
BY
ATTORNEY

Feb. 14, 1967 J. E. CRANCH ETAL 3,303,817

XEROGRAPHIC DEVELOPING APPARATUS

Filed Dec. 23, 1963 5 Sheets-Sheet 2

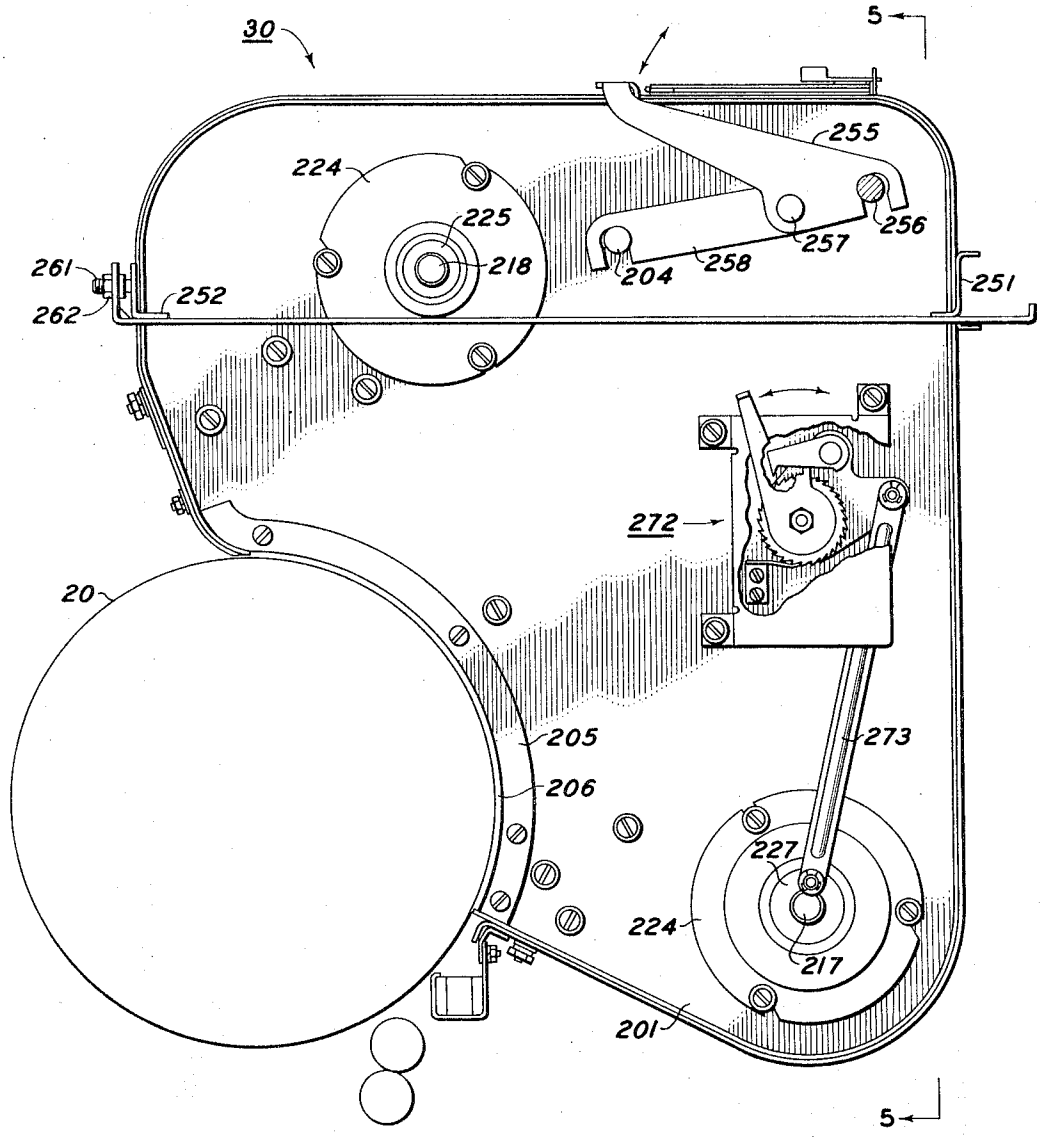

FIG. 2

INVENTORS
JOHN E. CRANCH
LYMAN H. TURNER
BY
Arthur G. Klein
ATTORNEY

Feb. 14, 1967 J. E. CRANCH ETAL 3,303,817

XEROGRAPHIC DEVELOPING APPARATUS

Filed Dec. 23, 1963 5 Sheets-Sheet 3

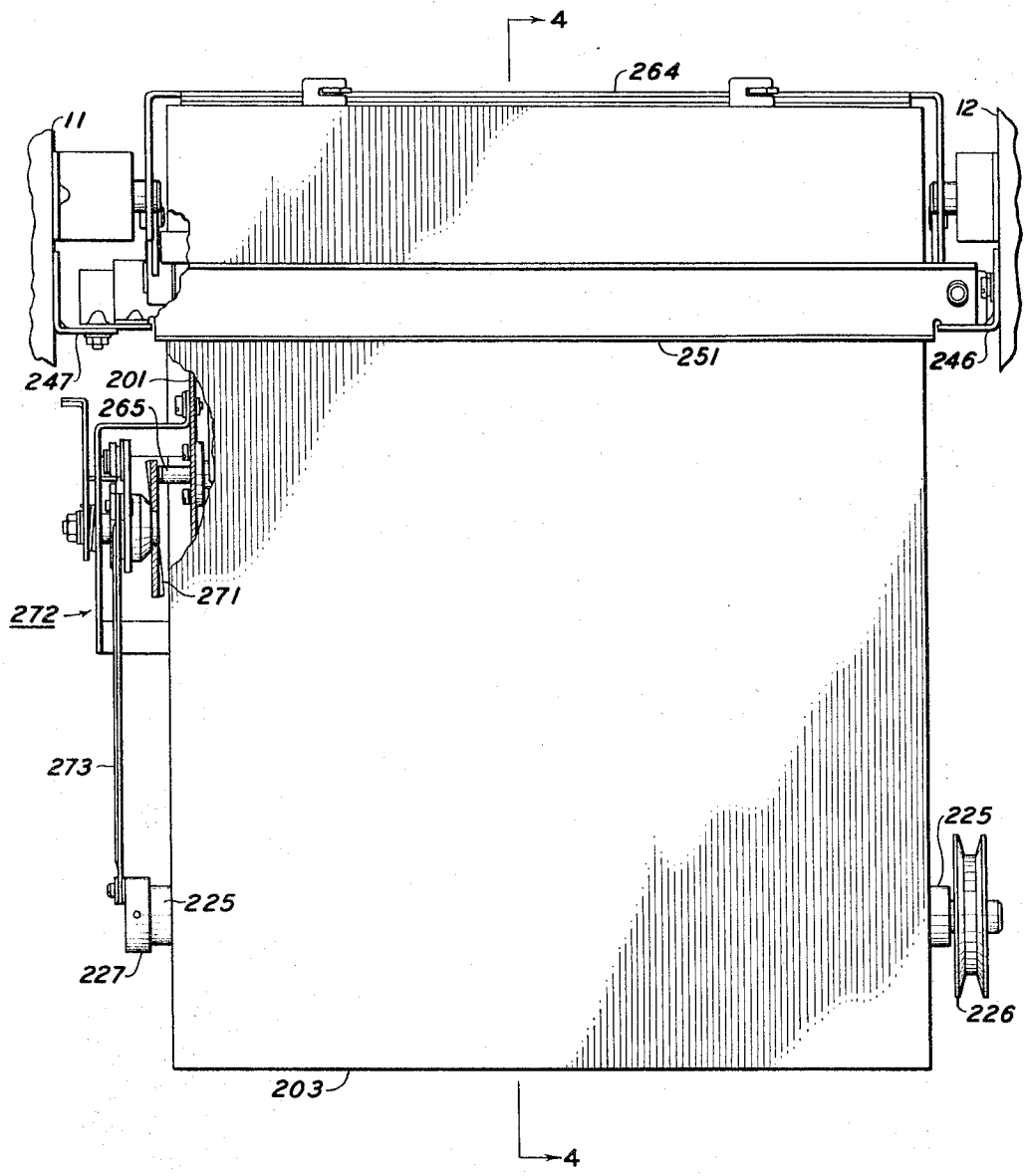

FIG. 3

INVENTORS
JOHN E. CRANCH
LYMAN H. TURNER
BY
Arthur W. Klein
ATTORNEY

Feb. 14, 1967 J. E. CRANCH ETAL 3,303,817

XEROGRAPHIC DEVELOPING APPARATUS

Filed Dec. 23, 1963 5 Sheets-Sheet 4

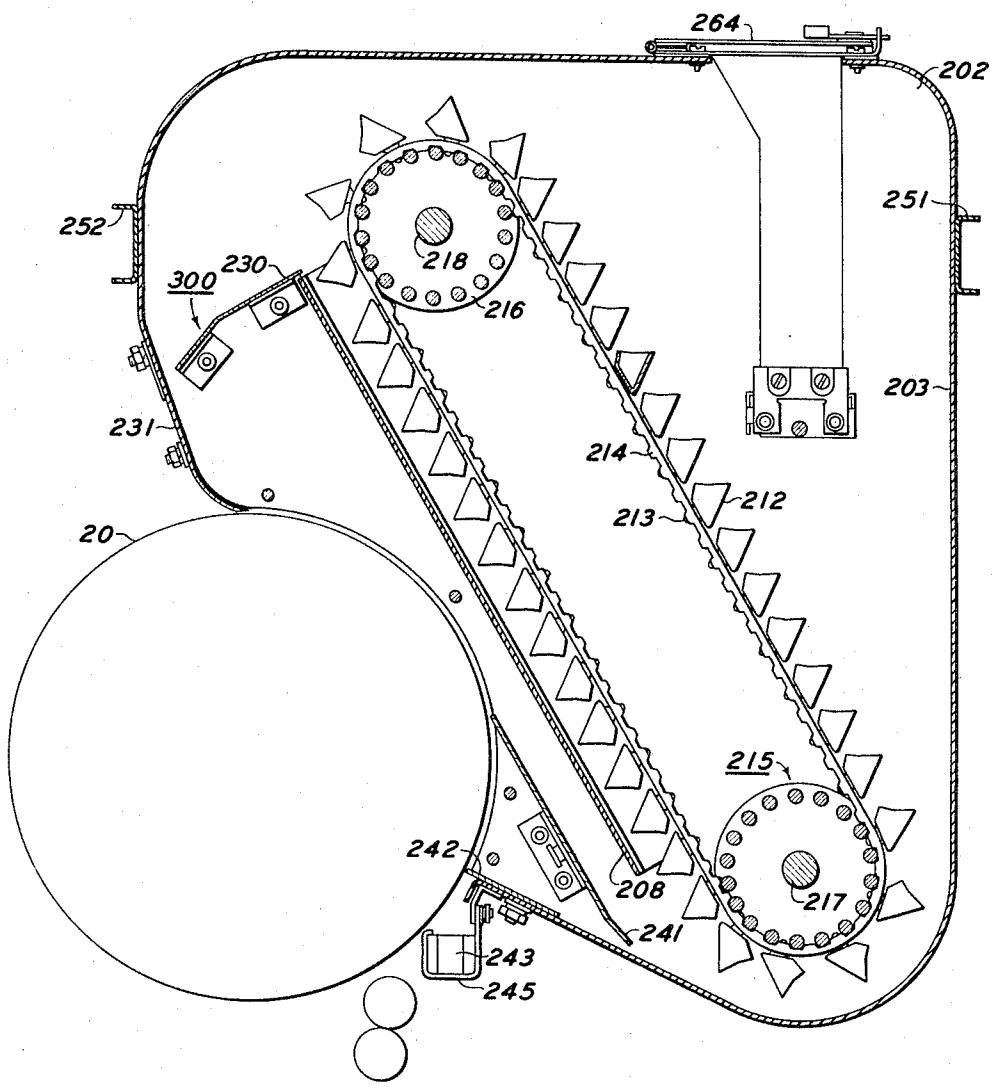

FIG. 4

INVENTORS
JOHN E. CRANCH
LYMAN H. TURNER
BY
Arthur G. Krein
ATTORNEY

Feb. 14, 1967 J. E. CRANCH ET AL 3,303,817

XEROGRAPHIC DEVELOPING APPARATUS

Filed Dec. 23, 1963 5 Sheets-Sheet 5

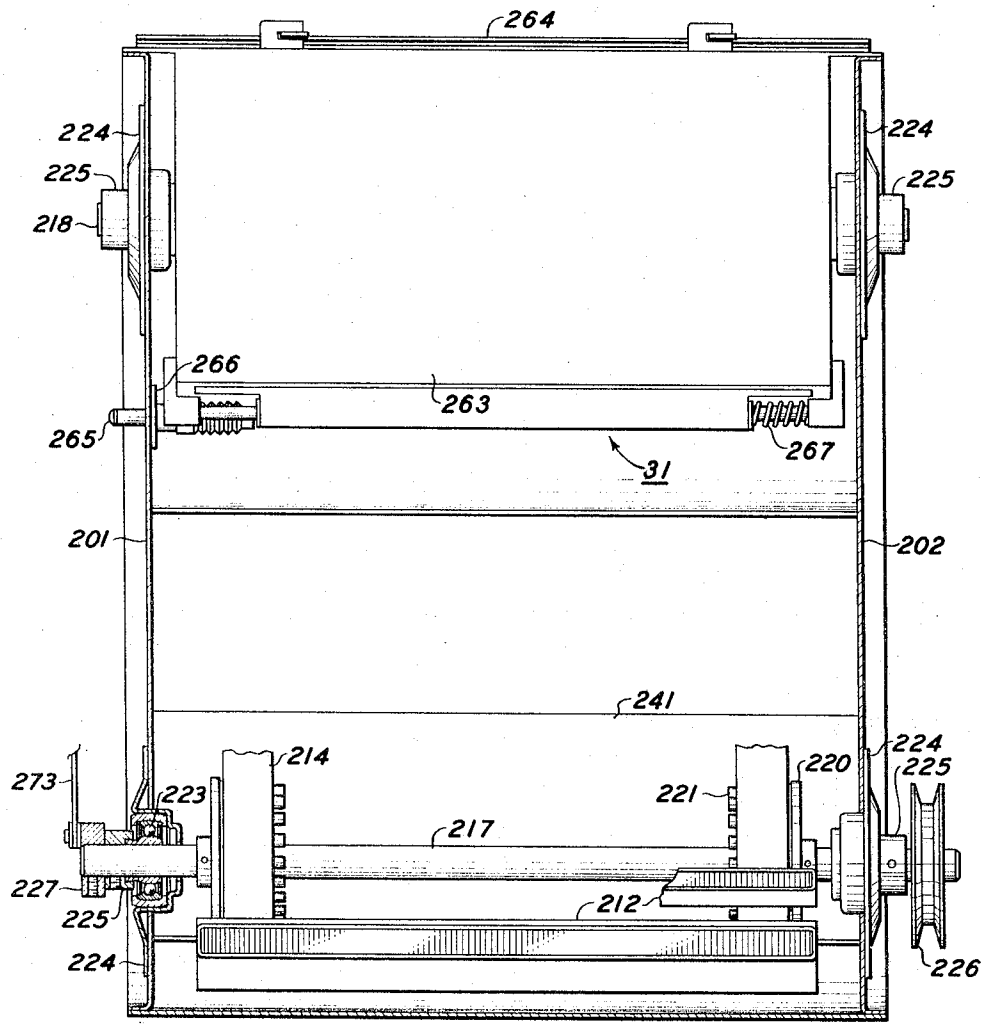

FIG. 5

INVENTORS
JOHN E. CRANCH
LYMAN H. TURNER
BY Norman C. Schneider
Arthur G. Krein
ATTORNEY

United States Patent Office 3,303,817 Patented Feb. 14, 1967

3,303,817

XEROGRAPHIC DEVELOPING APPARATUS

John E. Cranch, Penfield, and Lyman H. Turner, Pittsford, N.Y., assignors to Xerox Corporation, Rochester, N.Y., a corporation of New York

Filed Dec. 23, 1963, Ser. No. 332,478
4 Claims. (Cl. 118—637)

This application is concerned with xerography and more particularly with improved development apparatus for use in xerographic machines.

In the xerographic process an electrostatic latent image is formed on a photoconductive insulating member and is developed or made visible by the attraction thereto of finely divided pigmented material. The most widely used automatic xerographic machines employ a photoconductive insulating member in the form of a cylinder with a horizontal axis and use the so-called cascade type of development in which a developer material is poured or cascaded over the surface of the xerographic cylinder. As is well known, cascade developer generally comprises a mixture of granular particles having a diameter in the range of from about 20 mesh to about 200 mesh and much smaller pigmented resin powder particles, generally smaller than 50 microns, which electrostatically adhere to the larger particles. Since the smaller particles, called toner, are adherent upon the larger particles called carrier, the developer mixture flows and otherwise behaves substantially as a granular rather than a powdered material. As the developer mixture is poured over the electrostatic latent image bearing xerographic drum, toner particles are selectively separated from the carrier and deposit on the drum in image configuration.

Presently available machines of this general character employ a xerographic drum having a diameter of about 15 inches and operate at a linear speed of about 20 feet per minute. Other machines having an 8-inch diameter drum are developed at surface speed of 10 feet per minute. It is obviously desired for some applications to increase the speed of operation of machines and to make greater speeds available with machines employing even smaller drums. As machine speed is increased with present developing apparatus, image density begins to fall off and other forms of image degradation appear which are associated with incomplete development. As the diameter of the xerographic cylinder is decreased, these effects set in at lower and lower speeds, since the time spent by any portion of the cylinder in contact with the flowing developer stream is progressively reduced.

Certain known steps may be taken to increase the efficiency of xerographic development, but these are of limited effectiveness. The rate at which developer material is poured over the xerographic cylinder may be increased, but beyond a certain flow rate the excess developer never contacts the cylinder and is therefore ineffective in causing development. Similarly, the speed of development may be increased by raising the concentration of toner in the developer from the usual 1% to about 2%, but further increases merely cause serious image degradation.

It is accordingly the principal object of the present invention to provide novel development apparatus permitting the construction of xerographic machines adaptable for faster operation than has heretofore been possible. It is a further object to provide for improved machine concepts allowing for the production of more efficient and more compact xerographic machines than have previously been known by the art.

For a better understanding of the invention as well as other objects and further features thereof, reference is had to the following detailed description of the invention

to be read in connection with the accompanying drawings, wherein:

FIG. 1 is a schematic cross-sectional view of a xerographic machine having a developing apparatus constructed in accordance with the invention;

FIG. 2 is an enlarged side view of the developing apparatus shown in FIG. 1;

FIG. 3 is a rear view of the developing apparatus;

FIG. 4 is a sectional view taken along line 4—4 of FIG. 3; and,

FIG. 5 is a sectional view taken along line 5—5 of FIG. 2.

As shown schematically in FIG. 1, the automatic xerographic reproducing apparatus comprises a xerographic plate **20** including a photoconductive layer or light-receiving surface on a conductive backing and formed in the shape of a drum, which is mounted on a shaft journaled in a frame element of xerographic apparatus to rotate in the direction indicated by the arrow to cause the drum surface sequentially to pass a plurality of xerographic processing stations.

For the purpose of the present disclosure, the several xerographic processing stations in the path of movement of the drum surface may be described functionally, as follows:

A charging station, at which a uniform electrostatic charge is deposited on the photoconductive layer of the xerographic drum;

An exposure station, at which a light or radiation pattern of copy to be reproduced is projected onto the drum surface to dissipate the drum charge in the exposed areas thereof and thereby form a latent electrostatic image of the copy to be reproduced;

A developing station, at which a xerographic developing material including toner particles having an electrostatic charge opposite to that of the electrostatic latent image are cascaded over the drum surface, whereby the toner particles adhere to the electrostatic latent image to form a xerographic powdered image in the configuration of the copy being reproduced;

A transfer station, at which the xerographic powder image is electrostatically transferred from the drum surface to a transfer material or a support surface; and,

A drum cleaning and discharge station, at which the drum surface is brushed to remove residual toner particles remaining thereon after image transfer, and at which the drum surface is exposed to a relatively bright light source to effect substantially complete discharge of any residual electrostatic charge remaining thereon.

The charging station is preferably located, as indicated by reference character A. As shown, the charging arrangement includes a corona charging device **21** which includes a corona discharge array of one or more corona discharge electrodes that extend transversely across the drum surface and are energized from a high potential source and are substantially closed within a shielding member.

Next subsequent thereto in the path of motion of the xerographic drum is an exposure station B. An optical scanning or projection system is provided to project a flowing image onto the surface of the photoconductive drum from a stationary original.

The optical scanning or projection assembly comprises a stationary copyboard which consists of a transparent curved platen member **22** such as, for example, a glass plate or the like positioned on the exterior of the cabinet, which is adapted to support a document to be reproduced, the document being uniformly illuminated and arranged in light projecting relation to the moving light-receiving surface of the xerographic drum. Uniform lighting is provided by banks of lamps LMPS arranged on opposite sides of the copyboard. Scanning of

the document on the stationary copyboard is accomplished by means of a mirror assembly which is oscillated relative to the copyboard in timed relation to the movement of the xerographic drum.

The mirror assembly, which includes an object mirror 23 is mounted below the copyholder to reflect an image of the document through a lens 24 onto an image mirror 25 which in turn reflects the image onto the xerographic drum through a slot in a fixed light shield 26 positioned adjacent to the xerographic drum surface.

Adjacent to the exposure station is a developing station C in which there is positioned a developer apparatus constructed in accordance with the invention. The developing apparatus 30 includes a casing or housing having a lower or sump portion for accumulating developer material. A bucket type conveyor is used to carry the developing material to the upper part of the developer housing where it is cascaded over a hopper chute onto the xerographic drum to effect development. A toner dispenser is used to accurately meter toner to the developing material as toner particles are consumed during the developing operation.

Positioned next and adjacent to the developing station is the image transfer station D which includes a sheet feeding arrangement adapted to feed sheets of support material, such as paper or the like successively to the xerographic drum in coordination with the presentation of the developed image on the drum surface at the transfer station.

The sheet feeding mechanism includes a sheet feed device 40 adapted by means of vacuum feeders to feed the top sheet, of a stack of sheets on a tray 41, to a set of feed rollers 42 for advancement by the feed rollers of the sheet to a paper transport 44 which, in turn, conveys the sheet to a sheet registration device 45 positioned adjacent to the xerographic drum. The sheet registration device arrests and aligns each individual sheet of material and then in timed relation to the movement of the xerographic drum, advances the sheet material into contact with the xerographic drum in registration with a previously formed xerographic powder image on the drum.

The transfer of the xerographic powder image from the drum surface to the sheets of support material is effected by means of a corona transfer device 51 that is located at/or immediately after the line of contact between the support material and the rotating drum. In operation, the electrostatic field created by the corona transfer device is effective to tack the support material electrostatically to the drum surface, whereby the support material moves synchronously with the drum while in contact therewith. Simultaneously with the tacking action, the electrostatic field is effective to attract the toner particles comprising the xerographic powder image from the drum surface and cause them to adhere electrostatically to the surface of the support material.

Immediately subsequent to the image transfer station, there is positioned a stripping apparatus of paper pick-off mechanism 52 for moving the sheets of support material from the drum surface. This device, which is of the type disclosed in Rutkus et al. Patent 3,062,536, includes a plurality of small diameter orifices supplied with pressurized aeriform fluid by a suitable pulsator or other device. The pulsator is adapted to force jets of pressurized aeriform fluid through the outlet orifices into contact with the surface of the xerographic drum slightly in advance of the sheet of support material to strip the leading edge of the sheet from the drum surface and to direct it onto an endless conveyor 55 whereby the sheet material is carried to a fixing device 60. At the fixing device, the developed and transferred xerographic powder image on the sheet of support material is permanently fixed or fused thereto as by heat. After fusing, the finished copy is discharged from the apparatus at a suitable point for collection externally of the apparatus by means of the conveyor 65.

The next and final station in the device is a drum cleaning station E, having positioned therein a corona preclean device 66, similar to corona charging device 21, a drum cleaning device 70 adapted to remove any powder remaining on the xerographic drum after transfer by means of a rotating brush 71, and a discharge lamp LMP-1 adapted to flood the xerographic drum with light to cause dissipation of any residual electrical charge remaining on the xerographic drum.

To remove residual powder from the xerographic drum, there is disposed a cylindrical brush 71 rotatably mounted on an axle and driven by a motor, not shown. For collecting powder particles removed from the xerographic drum by the brush, there is provided a dust hood 73 that is formed to encompass approximately two-thirds of the brush area. To ensure thorough cleaning of the brush, a flicking bar 74 is secured to the interior of the dust hood adjacent the edge of the outlet duct 75 of the dust hood and in interfering relation with the ends of the brush bristles whereby dust particles may be dislodged therefrom.

For removing dust particles from the brush and dust hood, an exhaust duct 76 is arranged to cover the outlet of the dust hood, the exhaust duct being connected at its other end to the wall of a filter box 77 attached to the duct hood. A filter bag 78 is secured within the filter box, with the mouth of the filter bag in communication with the exhaust duct. A motor fan unit MOT-6, connected to the filter box, produces a flow of air through the filter box drawing air through the area surrounding the xerographic drum and the dust hood, the air entraining powder particles removed from the drum by the brush as the air flows through the dust hood. Powder particles are separated from the air as it flows through the filter bag so that only clean air reaches the motor unit.

Suitable drive means are provided to drive the drum, rotating mirror and sheet feed mechanism at predetermined speeds relative to each other, and to effect operation of the bucket-type conveyor and toner dispenser mechanism.

It is believed that the foregoing description is sufficient for the purposes of this application to show the general operation of the xerographic reproducing apparatus. For further details concerning the specific construction, reference is made to copending Gilbert A. Aser et al. application, Serial No. 332,653, filed concurrently herewith, now United States Patent No. 3,221,622, and to portions of this specification wherein specific elements cooperating with the developing apparatus are illustrated and described although they form no part of the instant invention.

Development system

Referring now to the subject matter of the invention there is shown in FIGS. 2 to 5, inclusive, a preferred form of developing apparatus constructed in accordance with the invention.

In order to effect development of the electrostatic latent image on the cylindrical xerographic plate, the developing system shown includes a developer apparatus which coacts with the cylindrical xerographic plate or drum to form a development zone wherein the charged and exposed surface of the drum is developed to form a powder image of the original document.

For this purpose a developer housing is mounted adjacent to the xerographic drum to form the development zone. Mounted within the developer housing is a driven bucket-type conveyor used to carry the developer material previously supplied to the developer housing to the upper portion of the developer housing from where the developer material is cascaded over a hopper chute onto the drum. As the developer material cascades over the drum, toner particles of the developer material adhere electrostatically

to the previously formed electrostatic latent image areas on the drum, the remaining developer material falling off the peripheral surface of the drum into the bottom of the developer housing. Toner particles consumed during the development operation to form the visible powder images are replenished by a toner dispenser mounted within the developer housing.

Specifically, the developer assembly or apparatus **30** includes a box-like developer housing having side walls **201** and **202** and a sheet metal outer shell or cover **203** forming in the lower portion thereof a reservoir for developer material. As shown, the side walls **201** and **202** are formed with a concave edge portion in conformity with the shape of the xerographic drum to permit the developer housing to be positioned closely adjacent to the drum. Retaining plates **205**, also formed to conform to the shape of the drum, are secured to the side walls to compress seals **206** sandwiched therebetween into contact with the outer edge of the drum to form a substantially powder tight seal. An inclined baffle **208** is secured to the inside faces of the side walls and extends therebetween to prevent dust and air currents from circulating within the housing adjacent to the surface of the drum.

A suitable bucket-type conveyor is used to convey developer material from the reservoir portion of the developer housing to the upper portion of the developer housing from where it is cascaded over the xerographic drum. In the embodiment disclosed the bucket-type conveyor consists of a series of parallel spaced buckets **212** secured as by rivets **213** to a pair of conveyor belts **214** wrapped around conveyor drive pulleys **215** and conveyor idler pulleys **216** secured on drive and idler shafts **217** and **218**, respectively, to rotate therewith. Each of these pulleys consists of side disc **220** to which are fastened pins **221** which engage the lugs on the timing belts **214**.

Drive shaft **217** is journaled in bearings **223** mounted in disked flange bearing carriers **224** secured as by screws to the side walls. The drive shaft is held in place against axial movement by collars **225**. A drive pulley **226** adapted to be driven by a belt connected to a suitable source of power is connected to the right, as seen in FIG. 5, outboard end of the shaft and an eccentric **227** is connected to the opposite end of the shaft for a purpose to be described hereinafter. Idler shaft is mounted in a similar manner. As the conveyor is operated by means of pulley **226**, the buckets will pick up a charge of developer material previously placed in the bottom or sump portion of the casing and carry this material upward. As the buckets travel around the upper set of pulleys, the developer material will be discharged onto a guide plate **230** which in turn discharges the developer against a chute **231** adjustably secured to the inside of the outer shell or cover of the casing.

In the embodiment shown, the guide plate **230** is bent to provide two inclined surfaces. The first surface, on which the developer material falls after it leaves the buckets of the conveyors, is inclined preferably at an angle of approximately 30 degrees to the horizontal and the trailing edge portion of the guide plate is positioned at an angle of approximately 55 degrees to the horizontal. The chute **231** is also positioned at an inclined angle. The first portion of the chute directly adjacent to the guide plate is positioned so that this portion of the chute is at an angle of approximately 20 degrees to the vertical. The bottom of the chute is formed as a portion of an arc with a radius of approximately 4½ inches.

The entire developer assembly is positioned in a manner to be described in detail hereinafter, so that the trailing edge of the curved, bottom portion of chute **231** is directly adjacent to the drum along a line substantially at the twelve o'clock position or top of the drum.

With this arrangement of the guide plate **230** and the chute **231**, developer material discharged onto the guide plate will fall by gravity and pick up speed before it contacts the chute **231** at which time, although the direction of travel of the developer material will be changed, it is directed downward at a steeper angle so that the developer material will pick up considerable speed in sliding or falling down this chute before it is deflected by the radius portion of the chute **231**. With this arrangement the developer material will contact the drum surface at approximately the twelve o'clock position of the drum at a speed slightly in excess of the lineal surface speed of the xerographic drum.

As the xerographic drum rotates, developing material discharged into contact with the uppermost portion of the drum, as directed thereto by the curved portion of chute **231**, will cascade over the drum and will eventually fall off or be thrown off the surface of the xerographic drum at a point which is about 70 degrees removed from the top of the drum. This is because the horizontal momentum acquired by the developer in sliding and rolling against the inclined surface of the drum causes it to be thrown off at a point other than at a point 90 degrees from the top of the drum as might be expected.

To catch the developing material that falls from the xerographic drum so that it may be returned to the reservoir in the developer housing, an upper pickoff bar **241** is secured in a position to overlie a lower pickoff bar **242**. Pickoff bar **241** is secured to the side walls of the developer housing while pickoff bar **242** is adjustably secured to the outer shell of the housing directly adjacent the drum. Any developing material not caught and returned to the reservoir of the developer housing by the pickoff bars is caught by a pan **243** held in place by a depending pan support **245** secured to the bottom portion of the outer shell of the developer housing. As a supply of developing material accumulates in this pan, it must be manually removed by an operator and returned to the developer housing.

For removably supporting the developer housing in operative position adjacent to the xerographic drum **20**, the developer housing is loosely supported on shelf members **246** and **247** suitably secured to frame elements **11** and **12** of the xerographic apparatus as shown in FIG. 3. The developer housing is supported on these shelf members by channels **251** and **252**, secured, as by welding, to the front and rear of the developer housing with the bottom flange portions of these channels extending beyond the sides of the housing, being bent in the opposite direction to rest on the shelf members.

With this arrangement, the developer can slide on the shelf members either toward the drum or away from it, as desired.

To effect controlled movement of the developer assembly along these shelf members a lever **255**, in the form of an elongated inverted U extends across the top of the developer housing, with the turned portions of the lever extending down on opposite sides of the housing. The ends of these turned portions of the lever are notched to receive pivot pins **256** suitably secured to the frame elements **11** and **12** and extending inwardly therefrom. Each of the turned portions, intermediate its ends, is pivotally secured as by pins **257** to one end of an arm **258**, the opposite end of which is notched to receive a stud **204**. The studs **204** extend outward from the outer surfaces of side walls **201** and **202** and are suitably secured thereto. By raising the lever **255**, the developer housing is slid on the shelf members away from the drum whereas with the lever in the position shown in FIG. 2, the developer housing is positioned in operative position against the drum. This latter position is controlled by means of adjustment screw **261** threaded into a nut **262** secured to the turned up portion of the shelf members, the end of the screw acting as a stop which limits the movement of the developed housing toward the drum, to the left as seen in FIG. 2.

As the developing mixture is cascaded over the xerographic drum, toner particles are pulled away from the carrier and deposited on the drum to form powder images,

while the partially denuded carried particles pass off the drum into the reservoir. As toner powder images are formed, additional toner particles must be supplied to the developing mixture in proportion to the amount of toner deposited on the drum. To supply additional toner particles to the developing mixture, a toner dispenser **31** is used to accurately meter toner to the developer mixture.

Although any one of a number of well-known powder or granulated material dispensers may be used, the toner dispenser shown is of the type disclosed in Hunt Patent No. 3,013,703.

The toner dispenser **31** includes a hopper **263**, the upper end of which is provided with flanges by means of which the hopper is supported on the outer shell of the housing. A hinged cover **264** is secured to a flange of the hopper **263** to close the top of the hopper. A reciprocating plunger **265** journaled in bearing block **266** secured to side wall **201** is provided to actuate the metering element, not shown, of the toner dispenser. Reciprocation of the plunger is affected in one direction by spring **267** and in the other direction by circular cam plate **271** rotated by a suitable pawl and ratchet indexing device **272**, similar to the toner drive mechanism disclosed in Lewis et al. Patent 3,067,720, except that rotary motion is converted to a reciprocating motion by the circular cam plate **271**. The pawl and ratchet indexing device **272**, is driven by crank arm **273**, connected to eccentric **227**, mounted on the drive shaft **217** of the developer conveyor, as previously described, whereby the toner dispenser is operated at a rate dependent on the speed at which the developer conveyor is operated and the setting of ratchet device **272**.

While the invention has been described with reference to the structures disclosed herein, it is not to be confined to the specific details set forth since modifications or changes may readily become apparent to those skilled in the art, and therefore this application is intended to cover such modifications or changes as may come within the purposes of the improvements or the scope of the following claims.

What is claimed is:

1. A developing apparatus for use in xerographic reproducing apparatus wherein a xerographic plate in the shape of a drum is journaled for rotation about a horizontal axis in a frame element of the xerographic reproducing apparatus, the developing apparatus including

a casing having a lower sump portion for accumulating developing material; side walls having a concave edge portion in conformity with the shape of the xerographic plate, and a front wall means terminating in a curved chute with the trailing edge portion of the curved chute positioned along a line which is substantially vertically above the horizontal axis of rotation of said xerographic plate,

a bucket-type conveyor mounted within said casing to carry developing material to the upper portion of said casing,

and a hi-planar guide mounted in said casing said guide being positioned removed from said trailing edge portion of said curved chute and adjacent to the upper portion of said bucket-type conveyor to deflect developing material discharged by said bucket-type conveyor downward toward and into contact with said front wall means whereby developing material as it falls down said guide onto said curved chute accelerates so that the velocity of the developing material as it contacts said xerographic drum is slightly greater than the lineal surface speed of said xerographic plate.

2. The developing apparatus of claim **1** wherein said guide is provided with a guide portion adjacent said bucket-type conveyor is inclined at an angle of approximately 30° to the horizontal and with a second guide portion inclined at an angle of approximately 55°.

3. The developing apparatus of claim **2** wherein said front wall means is inclined at an angle of approximately 20° to the vertical and toward said guide.

4. The developing apparatus of claim **3** in which said curved chute has a radius of curvature of approximately 4½ inches.

References Cited by the Examiner

UNITED STATES PATENTS

2,885,955	5/1959	Vyverberg	95—1.7 X
3,094,036	6/1963	Benson	95—1.7 X
3,099,856	8/1963	Eichorn et al.	95—1.7 X
3,105,770	10/1963	Lehmann et al.	118—637 X
3,113,042	12/1963	Hall	95—1.7
3,148,601	9/1964	Trumbull	118—637 X
3,206,307	9/1965	Ludwig	118—637 X

CHARLES A. WILLMUTH, *Primary Examiner.*

P. FELDMAN, *Assistant Examiner.*