METHOD FOR ELECTROPHOTOGRAPHIC EXPOSURE

Filed Dec. 20, 1972 2 Sheets-Sheet 1

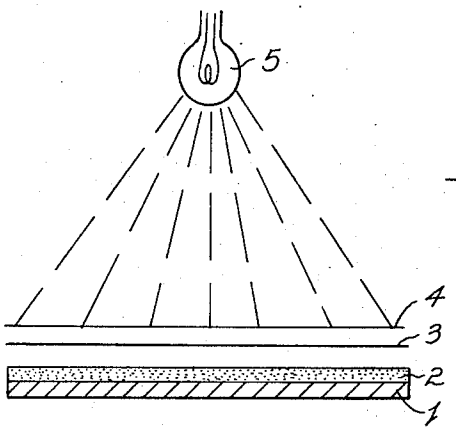

FIG 1

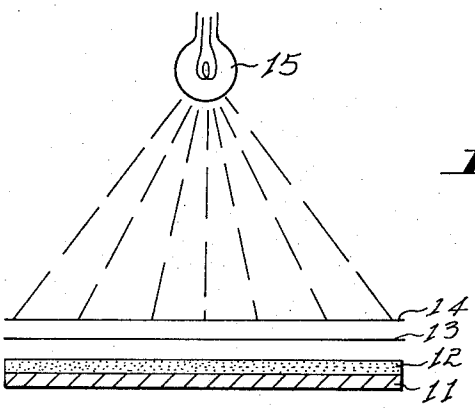

FIG 2

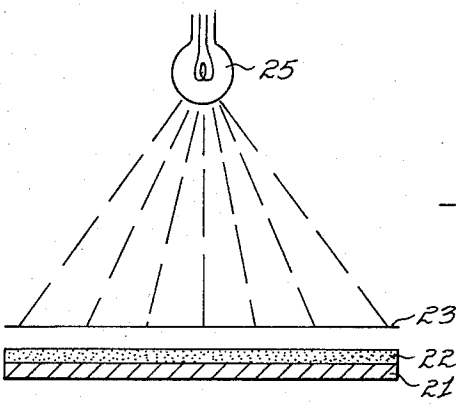

FIG 3

May 7, 1974 B. G. MARLEY 3,809,555

METHOD FOR ELECTROPHOTOGRAPHIC EXPOSURE

Filed Dec. 20, 1972 2 Sheets-Sheet 2

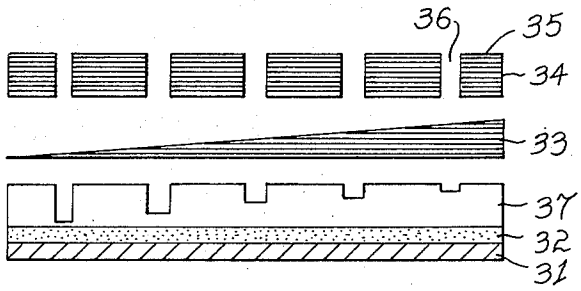

FIG 4

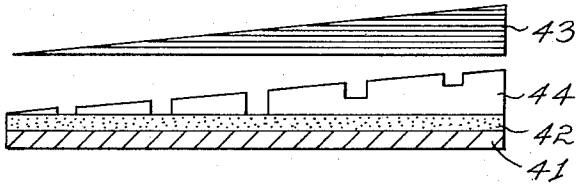

FIG 5

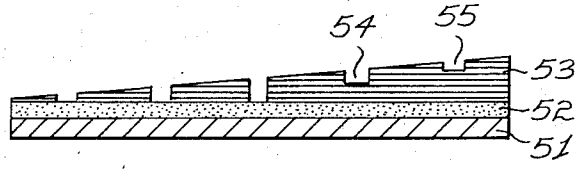

FIG 6

United States Patent Office 3,809,555 Patented May 7, 1974

3,809,555

METHOD FOR ELECTROPHOTOGRAPHIC EXPOSURE

Brian George Marley, Belair, South Australia, Australia, assignor to Research Laboratories of Australia, Pty. Limited, Eastwood, South Australia, Australia

Filed Dec. 20, 1972, Ser. No. 316,755
Claims priority, application Australia, Dec. 24, 1971, 7,517/71
Int. Cl. G03f 5/00; G03g
U.S. Cl. 96—1 R 4 Claims

ABSTRACT OF THE DISCLOSURE

A method for electrophotographic exposure in which a charged photoconductive recording member is exposed twice before development, once using in combination a continuous tone transparency and a screened transparency as an exposure mask, and then using the continuous tone transparency only as the exposure mask.

This invention relates to electrophotography, and in particular relates to a method of electrophotographic contact printing from continuous tone originals with an added cell structure, the combination of continuous tone exposure and cell structure exposure adjustment providing density and contrast control in the finish print.

Electrophotographic color printing methods are known in which screened separation positive transparencies are used as contact originals for the exposure of electrophotographic printing elements to produce an electrostatic latent image thereon, which is subsequently rendered visible by being immersed in a bath of liquid dispersed toner material of the appropriate color. Multicolor prints may be produced on the one printing element by repetitions of the charging, exposing and developing cycle of operations, using appropriate separation transparencies and colored toners. It is also known to transfer such colored toner deposits to an image receiving member using electrostatic transfer techniques, such image receiving member being a paper sheet, metal surface, plastic film or the like. Such prior art electrophotographic color printing processes are commonly used for pre-press proofing in connection with offset lithography for example. In other printing processes such as in certain types of gravure printing processes the separation positive transparencies used to control the etching of the printing cylinder are not screened in the sense of consisting of discrete dots of uniform density but varying size, such printing cylinders being etched with a cell pattern of more or less uniform area but varying in depth, the printing area comprising image or so-called cell areas surrounded by non-image areas or so-called cell walls. The depth variation ultimately achieved by etching, is controlled by the use of a continuous tone positive transparency as at least part of the exposure mask, and determines ink pink-up and consequently the printed density.

While it is possible to produce continuous tone color prints on photoconductive surfaces such as zinc oxide/resin binder photoconductive recording member surfaces, such continuous tone color prints do not contain the cell structure associated with gravure printing, and in addition contrast control is difficult to achieve.

The present invention teaches a method whereby the continuous tone positive may be used to produce areas of differing density on the finished print with the gravure cell structure added.

This invention may be put into practice as follows. The surface of a photoconductive recording member, such as a zinc oxide coated paper, is first charged, and then exposed for a predetermined period using as an exposure mask a continuous tone positive transparency and a gravure screen. The so produced electrostatic latent image consists of a grid pattern of relatively lesser charged areas corresponding relatively to the cell walls, surrounding relatively fully charged areas corresponding to the final cell structure or image area required. The presence of the continuous tone positive limits the amount of charge removed in the grid areas depending on the actual density of the continuous tone positive at that area. Control of the length of this exposure thus allows greater or lesser definition of the grid pattern as desired, in effect the exposure may be adjusted to "burn through" high density areas to produce a grid pattern and the extent of this burn through may be adjusted to obtain a pattern at any desired density on the continuous tone transparency. After this first exposure but before development a second exposure is made using the continuous tone positive only as an exposure mask, to produce charge level differences within the cells or image areas corresponding with the density changes on the continuous tone positive. Thus the first exposure in effect establishes the image structure, while the second exposure establishes tone density in the image areas. Thus it will be seen that this exposure method allows the production of electrostatic latent images of controlled contrast, on which is superimposed a grid pattern corresponding to the cell structure of a gravure screen.

The thus produced electrostatic latent image is developed by immersion in a bath of liquid dispersed toner of the required color, and may be transferred to another surface if desired. These process steps may be repeated as often as is required to produce a multicolor print.

It will be seen that this exposure process is very flexible in its operation, as it allows the user to adjust relative exposures to suit any continuous tone positive, regardless of its density range. Any screen can be used, depending on the requirements of the user, such as for example conventional gravure screens, gravure contact screens, or Dultgen screen positives in any desired ruling. In addition the two exposures may be adjusted to simulate the ink flow effect experienced in shadow areas in normal gravure printing, as will be seen from the illustrations.

The illustrations are included to aid the understanding of the principles of the present invention.

FIG. 1 illustrates one method of carrying out the first exposure, whereas FIG. 2 illustrates a second method of carrying out this first exposure. FIG. 3 illustrates the second exposure. FIG. 4 illustrates the charge distribution produced on the photoconductor by the first exposure, and FIG. 3 illustrates how this charge distribution is modified by the second exposure. FIG. 6 shows the developed image, including simulated ink flow in the high density or shadow areas.

Referring to FIG. 1 in detail, a photoconductive recording member consists of relatively conductive backing **1** and photoconductor layer **2**, which after charging has positioned in contact with photoconductive layer **2** a continuous tone positive **3**, above which is positioned a gravure screen **4**. Contact exposure is made by energizing lamp **5**.

In FIG. 2 the positions of the two exposure masks are reversed, gravure screen **14** being in contact with photoconductor layer **12** which is coated on relatively conductive base **11**. The continuous tone positive **13** is positioned above gravure screen **14**, and exposure is made by energizing lamp **15**.

FIG. 3 illustrates the second exposure, showing continuous tone positive **23** in contact with photoconductor **22** which is coated on relatively conductive base **21**. Exposure is made by energizing lamp **25**.

FIG. 4 shows the charge distribution produced by the first exposure. Charged photoconductor **2** on base **31** is

exposed to continuous tone positive 33, shown as a wedge to simulate density changes thereon, and gravure screen 34, consisting of high density cell areas 35 and transparent cell wall areas 36. The resultant charge pattern produced on photoconductor surface 32 is shown as 37, consisting of substantially uniform charge broken by lower charge density areas in a pattern corresponding with the low density areas 36 of gravure screen 34.

FIG. 5 illustrates the second exposure, in which continuous tone positive 43 is used to cause selective discharge of photoconductor 42 on base 41, to produce a charge pattern of varying density 44, still containing the cell structure introduced by the first exposure.

In FIG. 6 the image produced by developing the charge pattern of FIG. 5 is shown. Photoconductor 52 on base 51 has developed thereon image deposit 53 which corresponds with charge pattern 44 of FIG. 5. It will be seen that areas 54 and 55, which are part of the cell structure contained in high density areas have developed to a sufficient extent to simulate gravure ink flow in high density areas.

Thus the present invention teaches a method for electrophotographic exposure which can produce final developed images using continuous tone transparencies as exposure masks, the final developed image closely simulating the appearance of a gravure print. In addition the present exposure method is capable of consistent and accurate control to produce prints to any desired density and contrast range.

I claim:

1. A method for electrophotographic exposure in which a charged photoconductive recording member is exposed twice before development, one of said exposures being carried out using in combination a continuous tone transparency and a screened transparency as an exposure mask, and the other of said exposures being carried out using said continuous tone transparency only as an exposure mask.

2. The method for electrophotographic exposure comprising the steps of exposing a charged photoconductive recording member masked by a continuous tone transparency and a screen transparency, followed by a further exposure without recharging the recording member, said second exposure utilizing as an exposure mask the continuous tone transparency used for the first exposure.

3. A method for electrophotographic exposure according to claim 2 wherein said first exposure is carried out with the continuous tone transparency overlying the screened transparency.

4. A method for electrophotographic exposure according to claim 2, wherein said first exposure is carried out with the screened transparency overlying the continuous tone transparency.

References Cited

UNITED STATES PATENTS

3,121,010	2/1964	Johnson et al.	96—45
3,589,899	6/1971	Hersh	96—45
3,363,552	1/1968	Rarey	96—1 R
2,844,734	7/1958	Hartmann	96—1 R
2,987,397	6/1961	Maurer	96—45
3,746,540	7/1973	Rarey	96—45

RONALD H. SMITH, Primary Examiner

E. C. KIMLIN, Assistant Examiner

U.S. Cl. X.R.

96—45