June 7, 1938. E. S. SUTTON 2,119,895

WASHCLOTH

Filed July 9, 1937

Fig. 1.

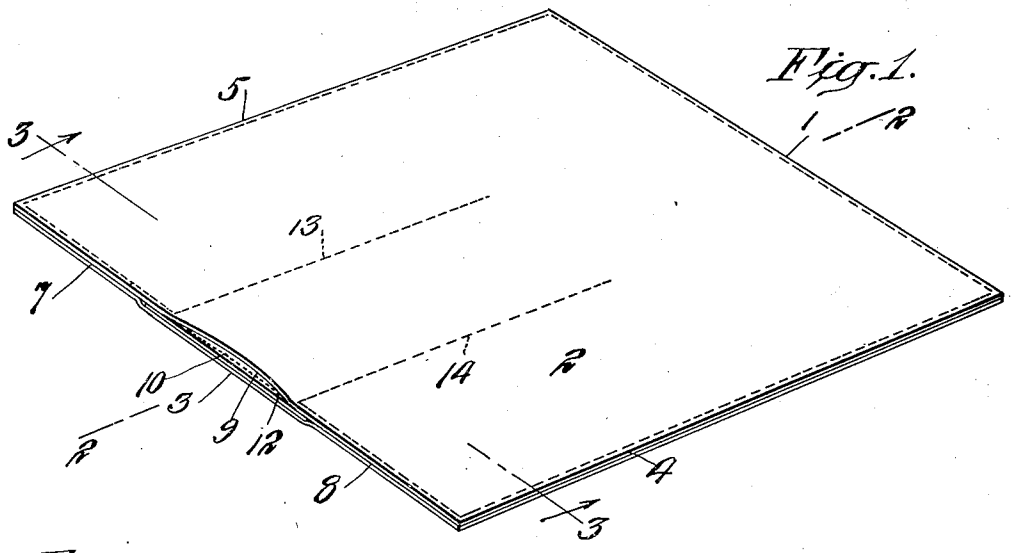

Fig. 2.

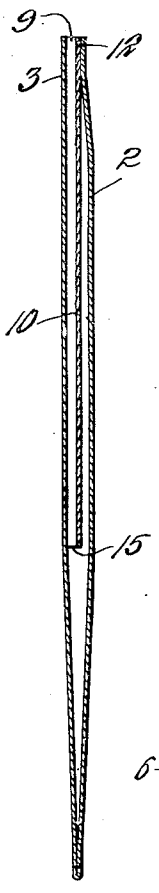

Fig. 3.

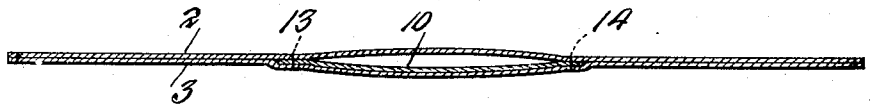

Fig. 4.

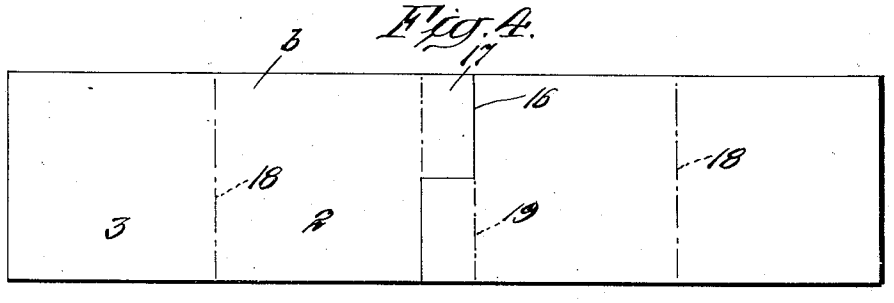

Fig. 5.

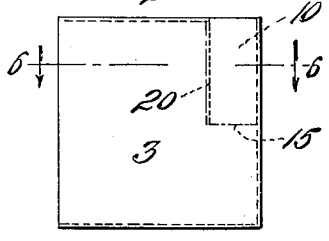

Fig. 6.

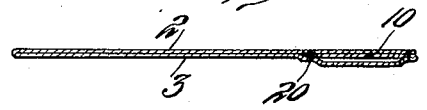

INVENTOR
EUNICE S. SUTTON
BY
ATTORNEY

Patented June 7, 1938 2,119,895

UNITED STATES PATENT OFFICE

2,119,895

WASHCLOTH

Eunice S. Sutton, Brooklyn, N. Y.

Application July 9, 1937, Serial No. 152,691

2 Claims. (Cl. 15—122)

This invention relates to improvements in wash cloths of the type wherein soap in flaked or small piece form is contained within or enveloped by the cloth.

Wash cloths of this general type are advantageously used where a profusion of soap lather is desired such as in dish washing or in personal use in conjunction with shower bathing. Pocket types of cloths have heretofore been proposed for this purpose for the economical use of small pieces of soap or for flaked soaps but the structures have been objectionable and unsatisfactory in that the entry openings thereof are such as to permit of the escape of the soap and lather from the unobstructed openings provided for the insertion of the soap.

In accordance with my present invention, I have eliminated the objections aforesaid and produced an improved cloth adapted to be more successfully used with contained soap by the provision of an elongated channel form opening to the cloth interior and in a manner to provide a channelled entry trap which will normally operate to prevent escape of the soap or lather other than through the fabric in the manner desired.

The improved cloth of my invention will be more fully understood by reference to the accompanying drawing wherein like reference characters are applied to the corresponding parts in the several views.

In the drawing:

Fig. 1 is a perspective view of a wash cloth made in accordance with my invention.

Fig. 2 is a cross-sectional view thereof taken on line 2—2 of Fig. 1.

Fig. 3 is a cross-sectional view at right angles to that of Fig. 2 and on line 3—3 of Fig. 1.

Fig. 4 is a plan view of a blank of fabric showing a method of cutting to produce a modified form of cloth.

Fig. 5 is a plan view of the cloth of modified construction made from the blank of Fig. 4.

Fig. 6 is a cross-sectional view thereof taken on line 6—6 of Fig. 5.

In the approved embodiment of the features of my invention as disclosed the body of the cloth is formed as an enlarged pocket or envelope by folding a suitable piece of fabric upon itself and stitching or sewing together the marginal edge portions as shown with the exception of a portion for an opening thereto. As shown, it is formed from a rectangular blank folded upon itself along the line 1 to provide upper and lower walls or layers 2—3 secured at their side edges 4 and 5 by stitching and likewise stitched inwardly from each side of the forward edge at 7 and 8 to leave an entry opening 9.

Prior to the folding and stitching as described, a rectangular insert or "trap" layer of fabric 10 is positioned with an edge coinciding with one wall of the opening 9 to be formed and is secured to the body by stitching along its marginal edges or side portions at 13—14 to the one layer, upper layer 2 as shown, and after folding is secured by stitching 12 along its outer edge to the other layer, lower layer 3 as shown; the innermost or rearward edge 15 of the insert 10 being unstitched or free as shown.

As a result thereof, there is formed a cloth having a full sized internal pocket fully closed by stitching along its outer marginal edges and having external communication only from the inwardly positioned mouth of the channel formed by the insert 10 at its free inner edge 15 and thence through the channel to the outer opening 9 thereto.

The channel entry opening for the introduction of the soap flakes or pieces, as will be appreciated, permits the soap pieces to readily pass through the channel when the cloth is dry but upon wetting in use the insert by its tendency to adhere to the wall 2 operates as a trap or valve to prevent escape of the soap and lather through the channel.

In Figs. 4 to 6 I have shown a suitable modified method of cutting a blank and construction of cloth embodying the features of my invention made therefrom. As shown in Fig. 4 a rectangular blank is employed which is cut on the staggered line 16 to produce the fabric for two cloths each with an integral flap extension 17 to form the insert or trap layer 10 when folded over on line 19. After folding over and stitching along its side edge 20 to the fold or layer 2, the layer 3 is folded over on line 18 and stitched as shown along its marginal edge to leave the opening as described and finally the "trap" layer 10 is sewn at its edge coincident with the opening to the other layer 3. In this construction, as will be understood, the trap layer is formed integral with the body of the cloth with resulting economy in the cutting and stitching operations.

While I have shown and described an approved embodiment of my invention it will be understood that varied modifications in form and arrangement may be made without departing from the scope of the invention as defined in the appended claims.

Having described my invention, I claim:

1. A wash cloth composed of superimposed lay-

ers of fabric secured together adjacent their edges to provide an internal pocket and having an edgewise opening thereto for the insertion of soap particles, a fabric insert secured at its side edges to the inner surface of one fabric layer and having its outer marginal edge secured to the other layer along the edge wall of the opening thereby to provide an elongated channel entry opening to the pocket.

2. A wash cloth composed of superimposed layers of fabric secured together adjacent their edges to provide an internal pocket with an edgewise entry opening thereto, said cloth being formed from a blank of rectangular contour folded upon itself and said blank having a flap extension at one edge thereof adapted to be folded inwardly upon one layer and secured at its side edge thereto to provide an insert channel layer and having its outer edge secured to the other layer along the edge wall of the opening

EUNICE S. SUTTON.