GB 2292363A

(12) UK Patent Application (19) GB (11) 2 292 363 (13) A

(43) Date of A Publication 21.02.1996

(21) Application No 9516998.3

(22) Date of Filing 18.08.1995

(30) Priority Data
(31) 9413462 (32) 20.08.1994 (33) DE

(71) Applicant(s)
BASF Magnetics GmbH

(Incorporated in the Federal Republic of Germany)

Dynamostrasse 3, 68165 Mannheim,
Federal Republic of Germany

(72) Inventor(s)
Klaus Schöttle
Heinrich Wollensack
Gerald-Wolfgang Borck
Hans Dieter Erhardt

(51) INT CL[6]
B65D 71/00 63/10

(52) UK CL (Edition O)
B8C CPA C102 C105
U1S S1804

(56) Documents Cited
WO 94/00362 A1 US 4821487 A US 4669611 A

(58) Field of Search
UK CL (Edition N) B8C CPA CV , B8F
INT CL[6] B65D 63/10 69/00 71/00
ONLINE:WPI

(74) Agent and/or Address for Service
J Y & G W Johnson
Furnival House, 14-18 High Holborn, LONDON,
WC1V 6DE, United Kingdom

(54) **Adhesive strip securing a stack of articles together**

(57) An article pack of stacked articles (K1 - K3) comprises at least one adhesive strip (5, 6) which does not have a line of weakness or tear lines and which is provided over at least the narrow sides of the stack. Each article has an individual marking so positioned so that in the stack only one marking is on the outside. This marking is covered by at least on of the adhesive strips. The material as well as being opaque or transparent is recyclable and corresponds as far as possible to other packaging material of the articles. A gripping aid may be provided to facilitate the largely non-destructive pulling off of the adhesive strips for individually separating the articles. The pack can be used for all rectangularly or parallelepiped shaped articles such as cuboids, cubes, packaged disks etc.

FIG.4

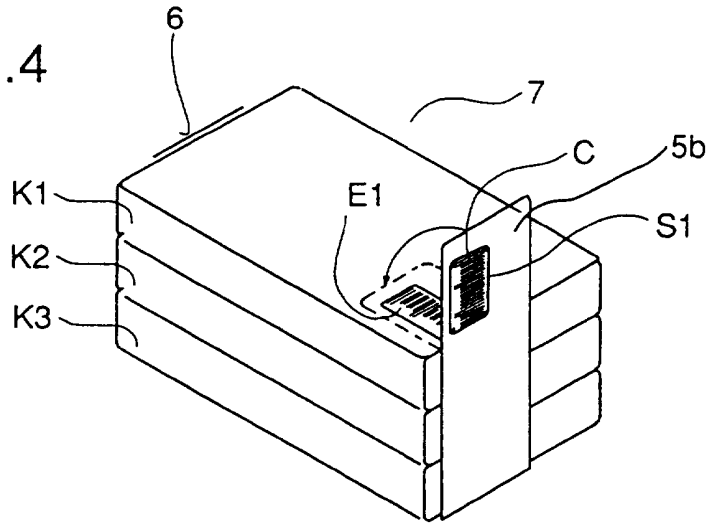

GB 2 292 363 A

FIG.1

(A)

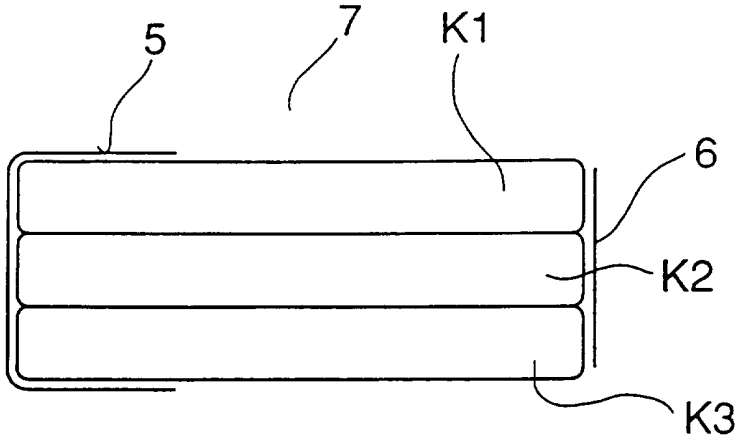

(A')

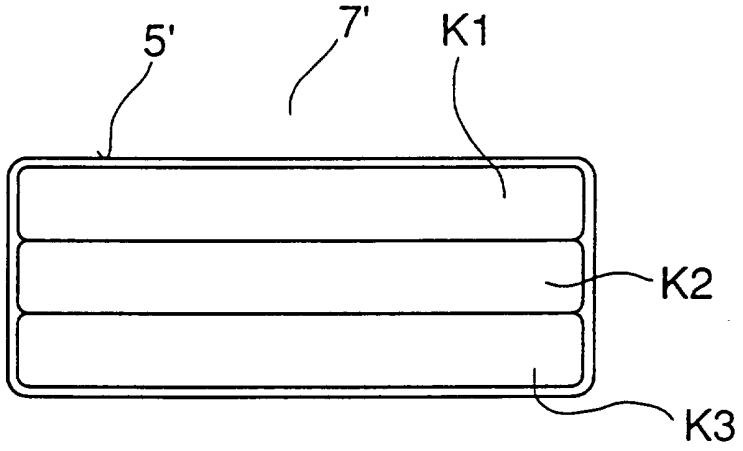

(B)

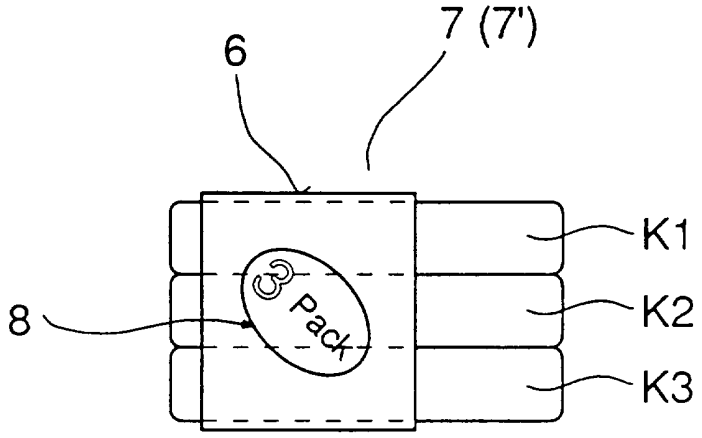

(C)

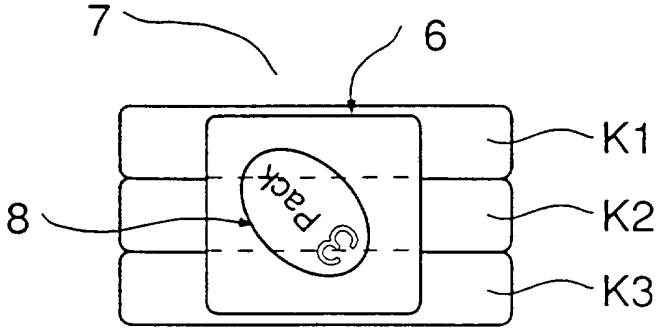

FIG.1

(D)

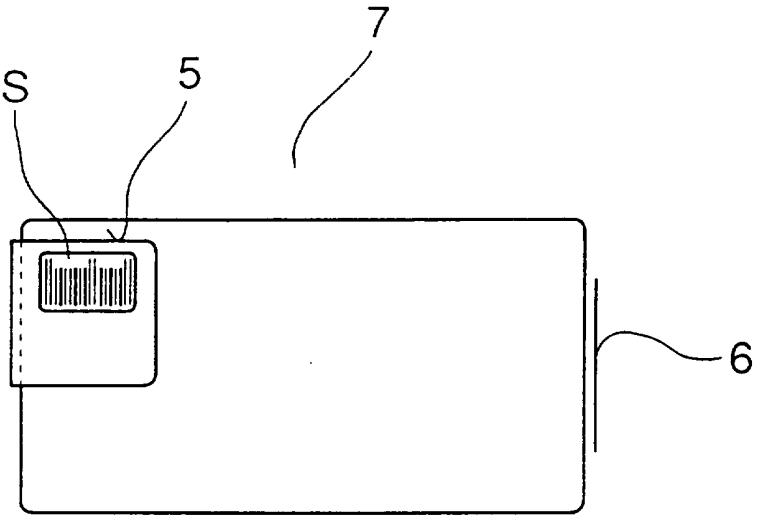

(E)

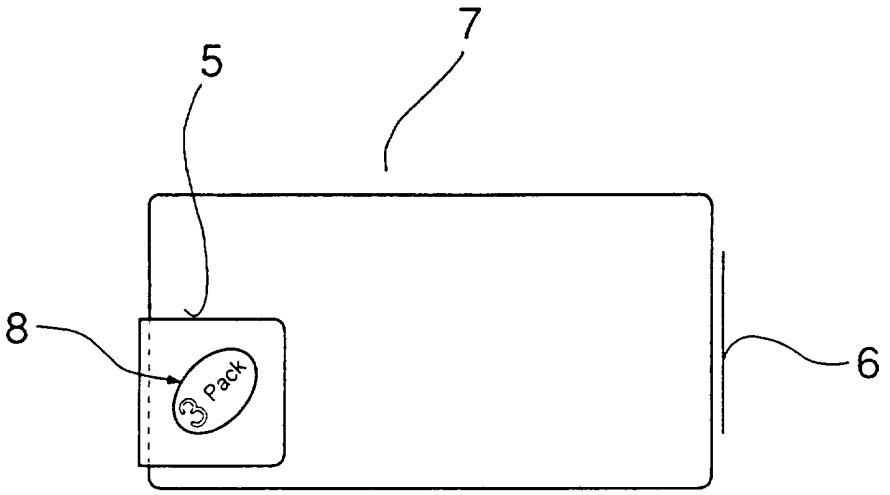

FIG.2

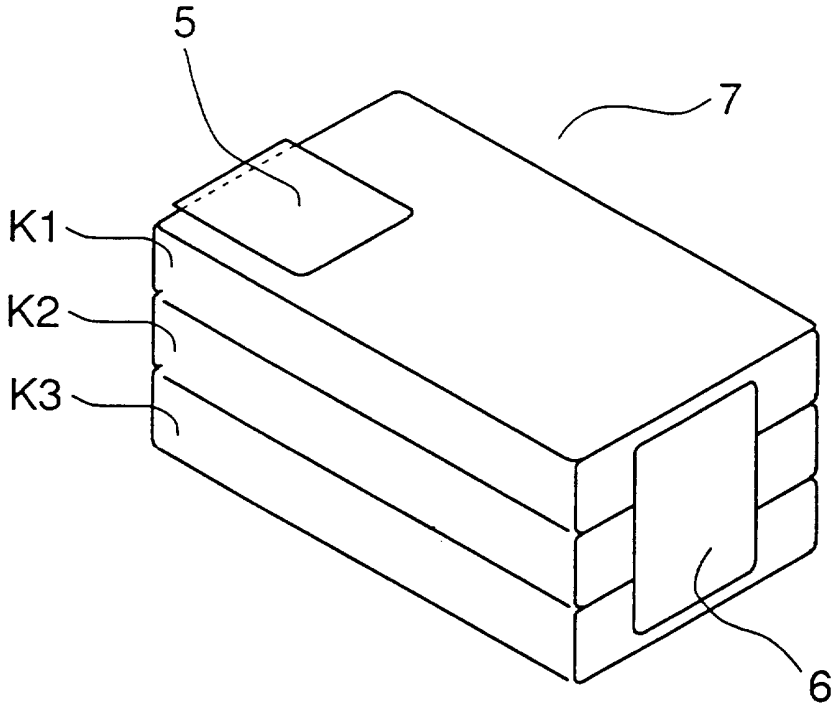

FIG.3

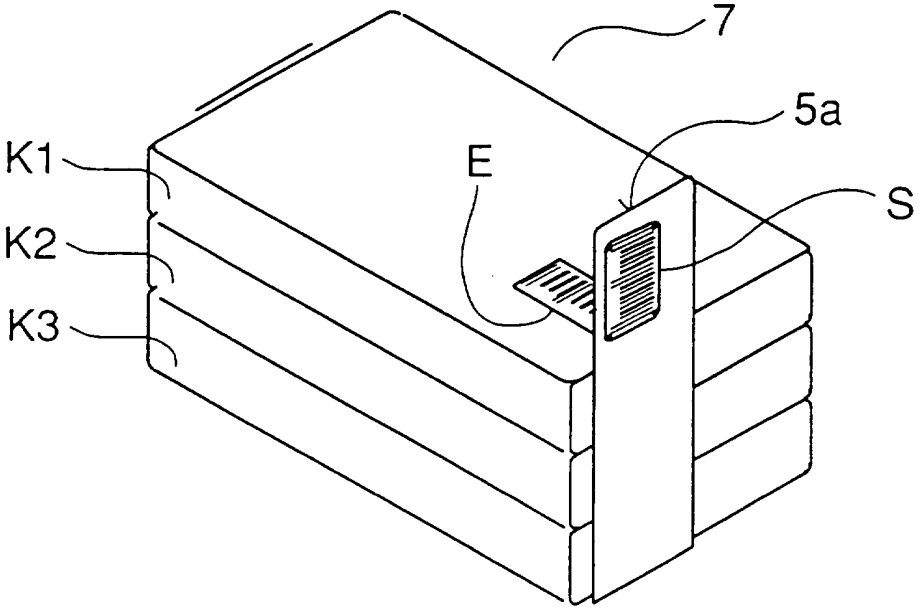

FIG.4

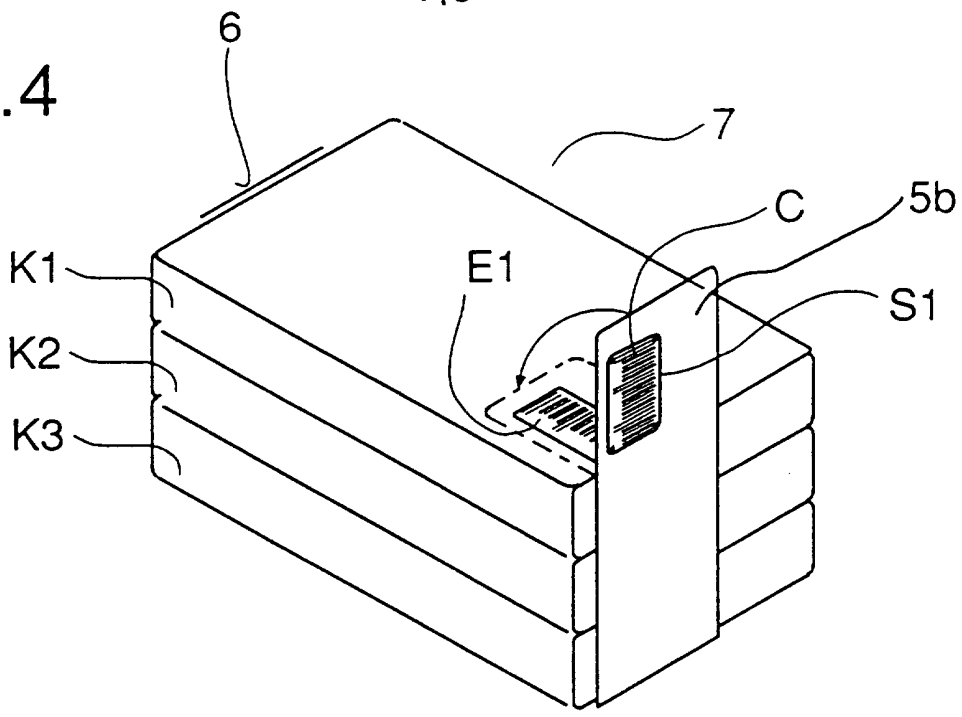

FIG.6

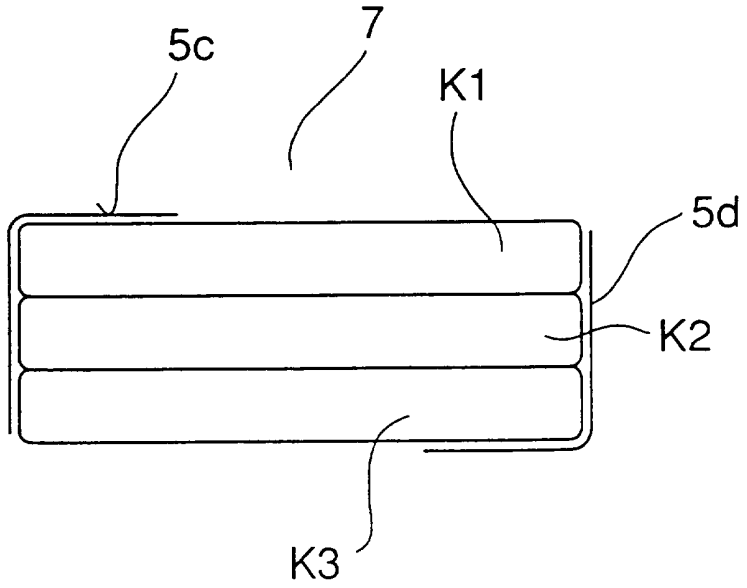

FIG.5

(A)

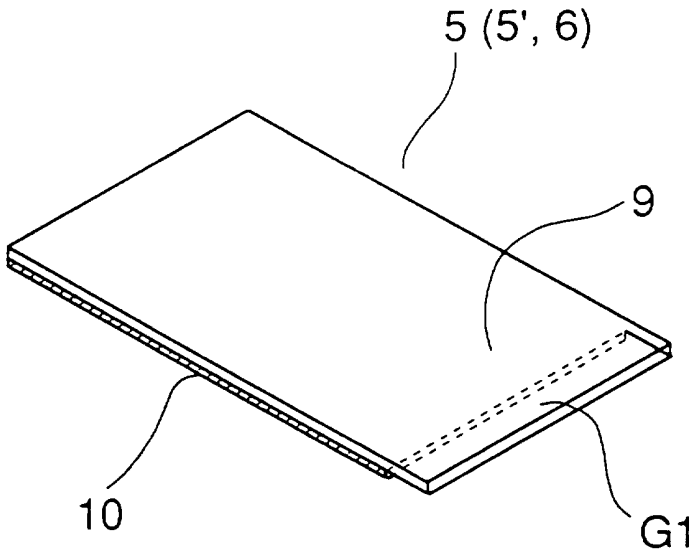

(B)

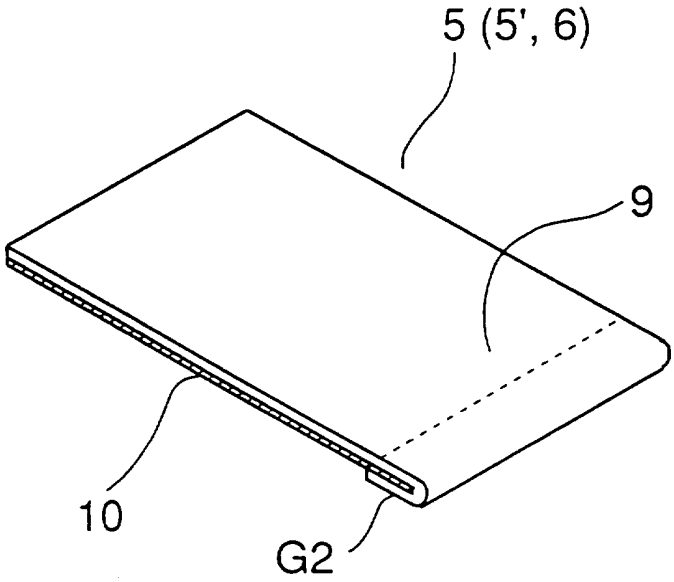

(C)

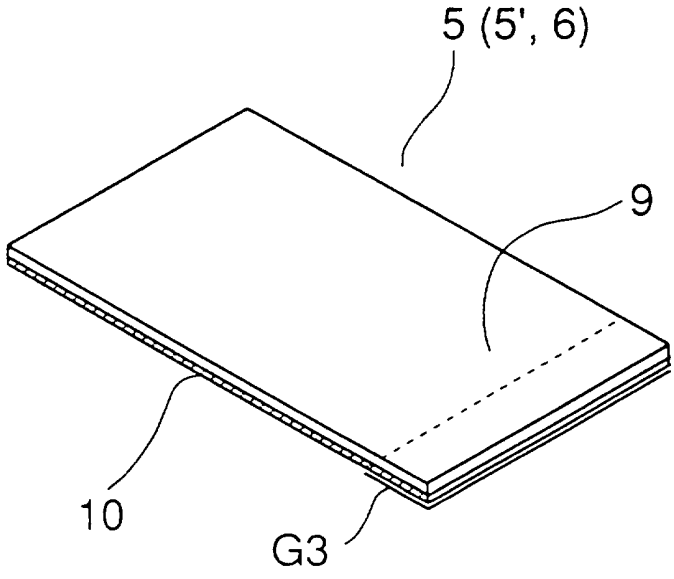

PACK FOR STACKED ARTICLES AND ADHESIVE STRIP THEREFOR

This invention relates to an article pack of the kind comprising individual articles arranged in a stack with parting joints between adjacent articles and each article being provided with an individual marking representative of the article in question and at least one adhesive strip which joins at least the side faces of the stacked individual articles to one another to form a transportable stack. The invention also relates to such an adhesive strip for use in the article pack.

In DE-U-8805045, packs for identical parallelepiped shaped articles have been created with pieces of adhesive tape arranged around three sides of the pack in a U shape. In the region of each parting joint between adjacent articles of a pack, the pieces of adhesive tape are provided with lines of weakness, e.g. perforations, defining tear lines.

In DE-U-9316388 there is described a protective enveloping unit comprising a plurality of identically shaped, stacked separate containers and side or corner adhesive strips joining the containers to one another. Tear lines are provided in these adhesive strips in the region of parting joints between adjacent containers in the stack.

In both these known cases, there is a risk that the stacks of articles will not remain together in assembled packages if the packages are dropped from a certain height, for example into sales dump bins, since the adhesive tape or strip may break prematurely and unintentionally along the lines of weakness with the result that the packs and/or the articles of the pack are damaged.

It is an aim of the present invention to avoid such disadvantages and improve in particular the identification of the individual and multiple packs for manufacture, storage and shipment.

We have found that this object is achieved by an article pack of the kind referred to if the at least one adhesive strip is formed without lines of weakness or tear lines along the parting joints of the stacked individual articles and at least partially covers at least one of said individual markings of the stacked individual articles.

Expediently, two adhesive strips are used. In both cases this produces a stable and simple pack, in which the requirements for identification are fully met in a material-saving way.

In a further refinement, the adhesive strip bears a marking of its own or a marking supplementing or altering the individual marking. This makes it possible to identify the type of multiple pack, with or without an individual marking. In a further design, the adhesive strip is a paper adhesive strip, for example for packaging cardboard outer packs such as video cassette cases.

The pack may advantageously consist of a recyclable plastics material.

If the individual packaging or wrapping of the articles comprises a plastics film material, the adhesive strip may favourably comprise the same material or at least a similarly recyclable material, for example of polyethylene film or polypropylene film.

For environmental reasons, the or each adhesive strip may advantageously comprise a material selected from the group consisting of caprolactone, cellulose acetate and polymeric starch derivative or from the group consisting of monopolymers and copolymers of linear polyesters of 3-hydroxyvaleric acid.

If two adhesive strips are provided, there may conveniently be two L-shaped strips, one U-shaped strip and one straight shaped strip, one U-shaped strip and one L-

shaped strip or two U-shaped strips.

The or each adhesive strip may expediently have an end or edge region which is designed to facilitate grasping with the hand. In particular the adhesive area in this end or edge region may be covered, for example by means of a turned-over region or by a separate covering layer.

An adhesive strip for the article pack according to the invention preferably bears a marking for the stack of individual articles (the entire stack).

The adhesive strip is expediently provided with an adhesive which can be detached, non-destructively, from the individual article pack. The pack can advantageously be used for any type of magnetic-tape cassettes, compact disks (CDs) and similar recording media, preferably in boxes.

Embodiments of the invention will now be described, by way of example only, with particular reference to the accompanying drawings, in which:

Figure 1 (A) is a side view of an article pack according to the invention and comprising parallelepiped articles arranged in an article stack and held together with two adhesive strips;

Figure 1 (A') is a side view of an alternative article pack according to the invention and comprising parallelepiped articles held together in a stack with one adhesive strip;

Figure 1 (B) is a side view of the article pack shown in Figure 1 (A) or (A') as viewed from the left;

Figure 1 (C) is a side view of the article pack of Figure 1 (A) as viewed from the right;

Figure 1 (D) is a plan from above of the article pack

of Figure 1 (A);

Figure 1 (E) is a plan from below of the article pack of Figure 1 (A);

Figure 2 is a perspective view of the article pack of Figure 1 (A);

Figure 3 is a perspective view of an article pack in which the articles are held together with an opaque adhesive strip, with the article pack having a marking and with an individual marking on the upper article of the pack;

Figure 4 is a view similar to Figure 3 but with the article pack having transparent adhesive strip with a pack marking (marking supplement) and an individual marking;

Figures 5 (A) to (C) are variations of adhesive strips with gripping aids for use in an article pack according to the invention; and

Figure 6 is a variation of the article pack shown in Figure 1 (A) but provided with two L-shaped adhesive strips.

Figure 2 shows an article pack of three parallelepiped articles, for example individual cassettes K1-K3 in boxes or in cases, arranged in a stack 7 and joined together by an L-shaped or U-shaped adhesive strip 5 and a planar adhesive strip 6 provided on the narrow sides of the stack 7. The opposite side faces of each article together define opposite side faces of the stack.

Figure 1A shows a side view of the cassettes K1-K3 in the longitudinal direction, with the U-shaped adhesive strip 5 covering part of upper and lower faces of the stack 7 and one narrow side of the stack 7 and the planar adhesive strip

6 located on the opposite narrow side of the stack. Figure 1A' shows the same side view of an alternative arrangement of a stack 7' of the cassettes K1-K3 joined together by a single adhesive strip 5' which extends around the stack 7' in the longitudinal direction. Such an adhesive strip 5' may of course also be arranged around the stack 7' only in the transverse direction. In both cases, two U-shaped adhesive strips or two L-shaped adhesive strips may also be provided in each case, suitably overlapping each other. As can be seen in elevation or in the view from below (Figures 1B, 1C and 1E), the U-shaped adhesive strip 5 is provided with a plain-text marking 8 "3 pack", which refers to the number of cassettes in the pack. In plan from above, the adhesive strip 5 is provided with a machine-readable bar-code marking 9 (for example in AEN code) representative of the pack contents.

Figures 3 and 4 show various configurations of such bar-code markings. In Figures 3 and 4, the individual marking E, representative of the cassette in question, can be seen on the topmost individual cassette K1.

If the adhesive strip is opaque (adhesive strip 5a in Figure 3), the individual marking E is covered, so as to be unreadable, over its full area, i.e. the individual marking E disappears under the multiple or collective marking S, as can be seen in plan in Figure 1D.

Figure 4 shows an alternative version in which the adhesive strip 5b is transparent. As readily evident, the multiple or collective marking S1 is provided with a supplementing or altering coding C, which either partially alters or supplements the individual marking coding E1, so that a code-reading machine then detects only the combined multiple or collective marking S1, representative of the pack contents, and no longer only the individual marking E1.

Figures 5 (A), (B) and (C) show different versions of the adhesive strip (5, 5', 6). Figure 5 (A) may comprise a

paper-laminate or plastics film as a substrate 9 with an adhesive layer 10, the substrate material depending on whether the individual packs include uncovered cardboard cases or film wrappings, for example of polyethylene or polypropylene. The film wrapping may also consist of heat-sealable polypropylene/polyethylene film.

It is also advantageously possible to produce the film wrapping and/or the adhesive strip(s) from biodegradable material selected from the group consisting of caprolactone, cellulose acetate and polymeric starch derivatives or selected from the group consisting of homoploymers and coploymers of linear polyesters of 3-hydroxybutanoic acid and 3-hydroxyvaleric acid. These linear polyesters of butyrates or valerates, the latter consisting of 4 and 5 carbon atoms respectively, are readily degradable and can also be readily mixed with polyethylenes and polypropylenes.

An acrylic dispersion adhesive, which is transparent and ensures redetachability of the adhesive strip 5, 5', 6 has proved successful as the adhesive layer 10.

The material for the adhesive strip should substantially correspond to that of the respective individual packaging and both should be recyclable together as far as possible.

The length and width of the adhesive strips 5, 5' and 6 are governed by the shape and the weight of the usually parallelepiped articles in the article pack. The length of the adhesive strips 5, 5' and 6 on the narrow side of the stack 7 or 7' should correspond approximately to the height of the stack 7 or 7', so that the uppermost and lowermost articles in the article pack are adhered over at least approximately half their height to improve the security of the multipack. The length of overlap of the U-shaped and L-shaped parts of the adhesive strips 5, 5' may correspond approximately to one third of the overall length of the

articles, although it can be less in the case of low weight packs and/or smaller numbers of articles in the stack. The width of the adhesive strips 5, 5' and 6 is expediently approximately half the article width. However the width may also be chosen to be wider or narrower, again depending on weight and number of articles in the pack and also on the material of the adhesive strip 5, 5' and 6 of the respective adhesive layer, as well as on the adherence of the latter on the film material.

In Figure 6 there is shown an alternative article pack design comprising two L-shaped adhesive strips 5c and 5d which enclose diagonally opposite edges of the article pack. This version involves minimum outlay but provides the pack with adequate strength in the drop test. However, it is also possible to combine a U-shaped adhesive strip 5 with an L-shaped adhesive strip 5c, 5d or two U-shaped adhesive strips 5 also in the configuration of adhesive strip 5'.

The adhesive strips shown in Figures 5 (A) - 5 (C) are provided with end regions G1 and G3 of various designs. In Figure 5 (A), the adhesive layer 10 is shorter than the length of the substrate 9, so that there remains a strip G1 which can be grasped by hand without contacting the adhesive layer 10. In Figure 5 (B), the adhesive layer 10 is also shorter than the length of the substrate 9; but the end G2 is adhesively attached as a turned-over edge to the adhesive layer 10. Finally, in the case of Figure 5 (C), the region G3 is formed by providing an additional covering layer for the adhesive layer, it being possible for the covering to be a coating layer, printed layer etc.

The adhesive strips are preferably designed with respect to their adhesive layers in such a way that they are detachable by hand from their underlying material without, as far as possible, the use of any separating implement, such as, for example, a knife.

In all cases, the gripping aid (G1-G3) provides a

good possibility of grasping the end of the adhesive strip by hand and pulling off the same non-destructively, after which the articles or cassettes are individually separated.

A pack for stacked articles with at least an identical base area, for example rectangular or square, substantially comprises at least one adhesive strip which does not have lines of weakness or tearing line and is preferably provided on the narrow sides of the stack. The material of the adhesive strip is expediently recyclable and corresponds as far as possible to other packaging material used for the articles in the article pack. A gripping aid facilitates the largely non-destructive pulling off of the adhesive strips for individually separating the articles. The pack can be used for all rectangularly or parallelepiped shaped articles such as cuboids, cubes, disks etc., such as for example magnetic tape cassettes or disks, optical recording media, boxes with articles, etc.

CLAIMS

1. An article pack comprising articles arranged in a stack with opposite side faces of each article together defining opposite side faces of the stack, each article having an individual marking representative of that article and positioned so that at least one individual marking is on the outside of the stack, and at least one adhesive strip joining the article side faces on each side of the stack, the or each adhesive strip covering at least one of said individual markings on the outside of the stack and having no lines of weakness or tear lines in the or each region where the strip bridges across adjacent articles in the stack.

2. An article pack according to claim 1, comprising at least two adhesive strips.

3. An article pack according to claim 1 or 2, in which the at least one adhesive strip is opaque and has a multiple or collective marking of its own representative of the pack contents and which is different from said at least one covered individual marking.

4. An article pack according to claim 1 or 2, in which the at least one adhesive strip is transparent and has a multiple or collective marking of its own supplementing or altering said at least one covered individual marking.

5. An article pack according to any one of claims 1 to 3, in which the adhesive strip comprises paper material.

6. An article pack according to any one of claims 1 to 4, in which the adhesive strip comprises a recyclable plastics material.

7. An article pack according to claim 1 or 2, in which each of the articles has an individual packaging or

wrapping of a plastics film material, and in which the or each adhesive strip comprises the same, or at least a jointly recyclable, material as the plastics film material of the individual packaging or wrapping.

8. An article pack according to claim 7, in which the or each adhesive strip comprises a polyethylene or polypropylene material.

9. An article according to claim 7, in which the or each adhesive strip comprises a material selected from the group consisting of caprolactone, cellulose acetate and polymeric starch derivative.

10. An article pack according to claim 7, in which the or each adhesive strip comprises a material selected from the group consisting of homopolymers and copolymers of linear polyesters of 3-hydroxybutanoic acid and 3-hydroxyvaleric acid.

11. An article pack according to any preceding claims, in which one of the adhesive strips has an L shape and is joined to one side face of, and to one of upper and lower faces of, the stack.

12. An article pack according to any one of claims 1 to 10, in which one of the adhesive strips has a U shape and is joined to at least one side face of, and to upper and lower faces of, the stack.

13. An article pack according to any one of the preceding claims, in which the at least one adhesive strip has at least one end or edge region designed as a gripping aid.

14. An article pack according to claim 13, in which said end or edge region comprises an adhesive-free region.

15. An article pack according to any of the

preceding claims, in which said articles comprise magnetic-tape cassettes with or without boxes.

16. An article pack according to any of claims 1 to 14, in which said articles comprise compact disks contained in boxes.

17. An article pack constructed and arranged substantially as herein described with reference to, and as illustrated in, Figures 1A, 1B, 1C, 1D, 1E and 2, Figure 1A', Figure 3, Figure 4 or Figure 6 or Figures 1A, 1B, 1C, 1D, 1E and 2, Figure 1A', Figure 3, Figure 4 or Figure 6 each as modified by any one of Figures 5A, 5B and 5C.

18. An adhesive strip for an article pack according to claim 3 or any of claims 5 to 14 when dependent on claim 3, comprising an opaque material with a multiple or collective marking applied thereupon representative of the contents of the article pack.

19. An adhesive strip for an article pack according to claim 4 or any of claims 6 to 14 when dependent on claim 4, comprising a transparent material with a supplementing or altering marking applied thereupon for supplementing or altering individual markings of the articles.

20. An adhesive strip for an article pack as claimed in any of claims 1 to 17, comprising an adhesive layer which ensures the non-destructive detachability of the adhesive strip from the individual articles or packaging material applied to the individual articles.

21. A pack for stacked articles each provided with an individual marking and each of similar shape in at least one direction, e.g. of square or rectangular shape, comprising at least one adhesive strip joining at least side faces of the stacked articles together, with parting joints between the stacked articles, to form a transportable stack, wherein the at least one adhesive strip is formed without

lines of weakness or tear lines along the parting joints and at least partially covers at least one individual marking of the stacked articles.

Amendments to the claims have been filed as follows

1. An article pack comprising articles arranged in a stack with opposite side faces of each article together defining opposite side faces of the stack, each article having an individual marking representative of that article and positioned so that at least one individual marking is on the outside of the stack, and at least one adhesive strip joining the article side faces on at least one side of the stack, the at least one adhesive strip covering the at least one individual marking on the outside of the stack, wherein said at least one adhesive strip has no lines of weakness or tear lines in the or each region where the strip bridges across adjacent articles in the stack and has a multiple or collective marking of its own representative of the pack contents and which is different from said at least one covered individual marking.

2. An article pack according to claim 1, comprising at least two adhesive strips.

3. An article pack according to claim 1 or 2, in which the at least one adhesive strip is opaque.

4. An article pack according to claim 1 or 2, in which the at least one adhesive strip is transparent and has a multiple or collective marking of its own supplementing or altering said at least one covered individual marking.

5. An article pack according to any one of claims 1 to 3, in which the adhesive strip comprises paper material.

6. An article pack according to any one of claims 1 to 4, in which the adhesive strip comprises a recyclable plastics material.

7. An article pack according to claim 1 or 2, in which each of the articles has an individual packaging or

wrapping of a plastics film material, and in which the or each adhesive strip comprises the same, or at least a jointly recyclable, material as the plastics film material of the individual packaging or wrapping.

8. An article pack according to claim 7, in which the or each adhesive strip comprises a polyethylene or polypropylene material.

9. An article according to claim 7, in which the or each adhesive strip comprises a material selected from the group consisting of caprolactone, cellulose acetate and polymeric starch derivative.

10. An article pack according to claim 7, in which the or each adhesive strip comprises a material selected from the group consisting of homopolymers and copolymers of linear polyesters of 3-hydroxybutanoic acid and 3-hydroxyvaleric acid.

11. An article pack according to any preceding claims, in which one of the adhesive strips has an L shape and is joined to one side face of, and to one of upper and lower faces of, the stack.

12. An article pack according to any one of claims 1 to 10, in which one of the adhesive strips has a U shape and is joined to at least one side face of, and to upper and lower faces of, the stack.

13. An article pack according to any one of the preceding claims, in which the at least one adhesive strip has at least one end or edge region designed as a gripping aid.

14. An article pack according to claim 13, in which said end or edge region comprises an adhesive-free region.

15. An article pack according to any of the

preceding claims, in which said articles comprise magnetic-tape cassettes with or without boxes.

16. An article pack according to any of claims 1 to 14, in which said articles comprise compact disks contained in boxes.

17. An article pack constructed and arranged substantially as herein described with reference to, and as illustrated in, Figures 1A, 1B, 1C, 1D, 1E and 2, Figure 1A', Figure 3, Figure 4 or Figure 6 or Figures 1A, 1B, 1C, 1D, 1E and 2, Figure 1A', Figure 3, Figure 4 or Figure 6 each as modified by any one of Figures 5A, 5B and 5C.

18. An adhesive strip for an article pack according to claim 3 or any of claims 5 to 14 when dependent on claim 3, comprising an opaque material with a multiple or collective marking applied thereupon representative of the contents of the article pack.

19. An adhesive strip for an article pack according to claim 4 or any of claims 6 to 14 when dependent on claim 4, comprising a transparent material with a supplementing or altering marking applied thereupon for supplementing or altering individual markings of the articles.

20. An adhesive strip for an article pack as claimed in any of claims 1 to 17, comprising an adhesive layer which ensures the non-destructive detachability of the adhesive strip from the individual articles or packaging material applied to the individual articles.

21. A pack for stacked articles each provided with an individual marking and each of similar shape in at least one direction, e.g. of square or rectangular shape, comprising at least one adhesive strip joining at least side faces of the stacked articles together, with parting joints between the stacked articles, to form a transportable stack, wherein the at least one adhesive strip is formed without

lines of weakness or tear lines along the parting joints and at least partially covers at least one individual marking of the stacked articles.

The Patent Office

17

Application No: GB 9516998.3
Claims searched: 1-17, 21

Examiner: William Thomson
Date of search: 20 October 1995

Patents Act 1977
Search Report under Section 17

Databases searched:

UK Patent Office collections, including GB, EP, WO & US patent specifications, in:

UK Cl (Ed.N): B8C (CPA, CV), B8F

Int Cl (Ed.6): B65D 63/10, 69/00, 71/00

Other: ONLINE:WPI

Documents considered to be relevant:

Category	Identity of document and relevant passage		Relevant to claims
X,Y	WO 94/00362A1	(MARINELLI) p7 lines 18-29, p8 lines 1-4	X:1, 2, 4, 12, 13, 14, 21 Y:3, 11
Y	US 4669611	(FLAHERTY) Column 1 lines 44-60	3, 11
A	US 4821487	(JAMES) Column 1, lines 33-39	13, 14

X	Document indicating lack of novelty or inventive step	A	Document indicating technological background and/or state of the art.
Y	Document indicating lack of inventive step if combined with one or more other documents of same category.	P	Document published on or after the declared priority date but before the filing date of this invention.
&	Member of the same patent family	E	Patent document published on or after, but with priority date earlier than, the filing date of this application.