United States Patent [19]

Roche

[11] **Patent Number: Des. 308,497**

[45] **Date of Patent: ** Jun. 12, 1990**

[54] **TRAY FOR AN INVALID WALKER**

[76] Inventor: **Cyril J. Roche,** 567 Corbett Ave., San Francisco, Calif. 94114

[**] Term: **14 Years**

[21] Appl. No.: **889,530**

[22] Filed: **Jul. 25, 1986**

[52] **U.S. Cl.** **D12/133;** D7/549

[58] **Field of Search** D12/133; D7/37; 108/46, 108/47, 49; 297/188, 174, 144, 189

[56] **References Cited**

U.S. PATENT DOCUMENTS

D. 218,759	9/1970	Foster	D12/133
D. 263,458	3/1982	Milizia	D12/133
3,338,628	8/1967	Evans	108/47
4,662,676	5/1987	Havelock	D12/133
4,795,210	1/1989	Milat	297/188

Primary Examiner—Wallace R. Burke
Assistant Examiner—Kay H. Chin
Attorney, Agent, or Firm—Henderson & Sturm

[57] **CLAIM**

The ornamental design for a tray for an invalid walker, as shown and described.

DESCRIPTION

FIG. **1** is a top perspective view of a tray for an invalid walker showing my new design;
FIG. **2** is a top plan view thereof;
FIG. **3** is a bottom plan view thereof; and
FIG. **4** is a side elevational view thereof, the opposite side elevational view being a mirror image of that shown.

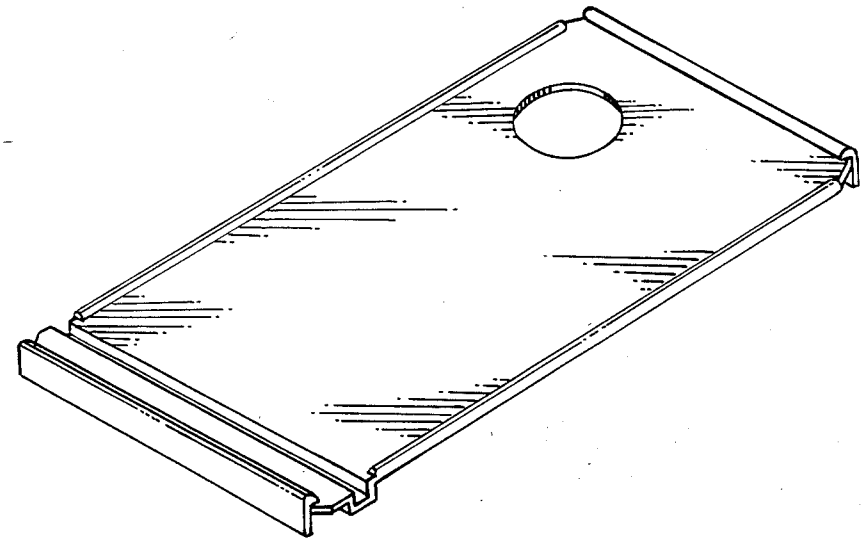

FIG. 1.

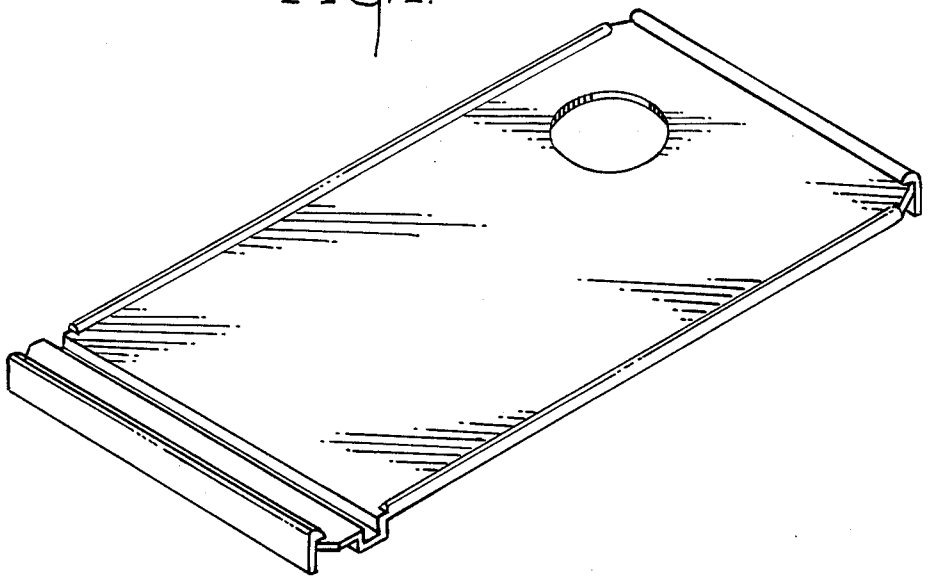

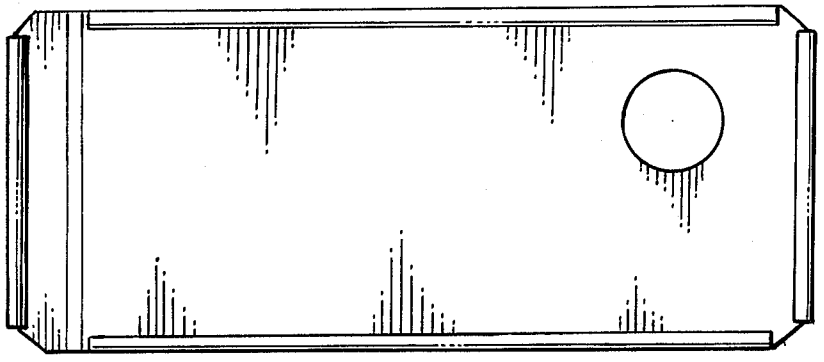

FIG. 2.

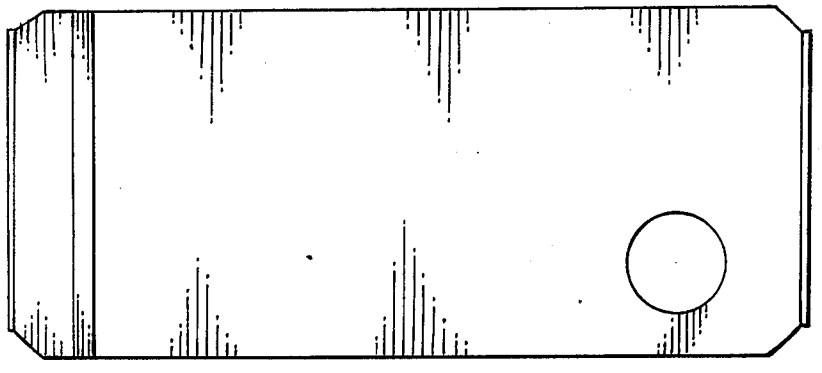

FIG. 3.

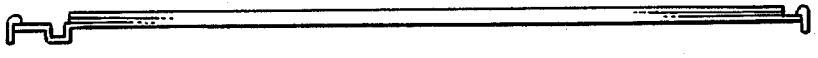

FIG. 4.