Oct. 13, 1942. W. A. PORTER 2,298,839

FORM FOR CONCRETE ARCH CONSTRUCTION

Filed Sept. 17, 1940 3 Sheets-Sheet 1

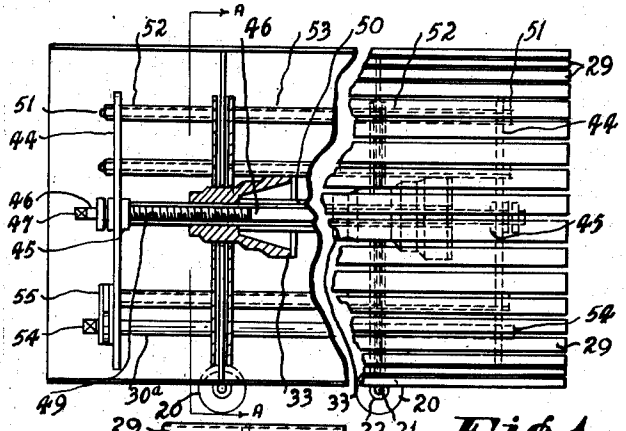

Fig. 1.

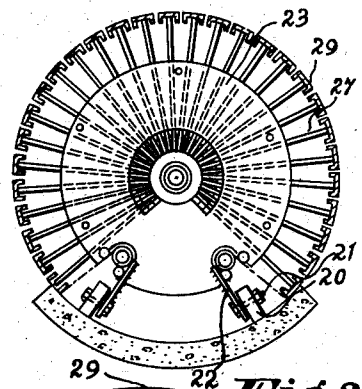

Fig. 2.

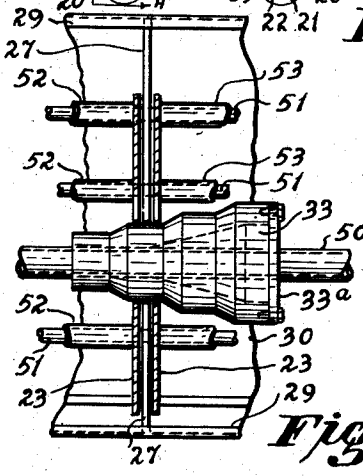

Fig. 3.

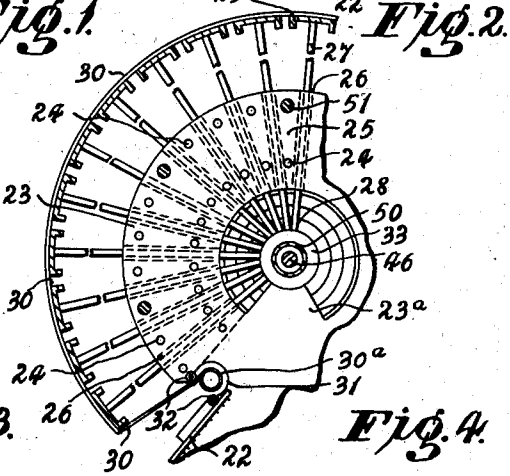

Fig. 4.

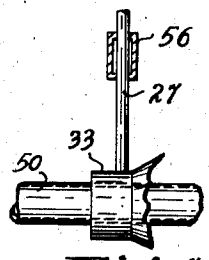

Fig. 5.

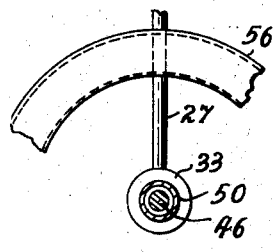

Fig. 6.

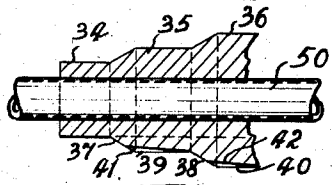

Fig. 8.

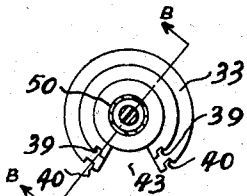

Fig. 7.

Inventor
William Alfred Porter
by
Young, Emery & Thompson
attys.

Oct. 13, 1942. W. A. PORTER 2,298,839

FORM FOR CONCRETE ARCH CONSTRUCTION

Filed Sept. 17, 1940 3 Sheets-Sheet 2

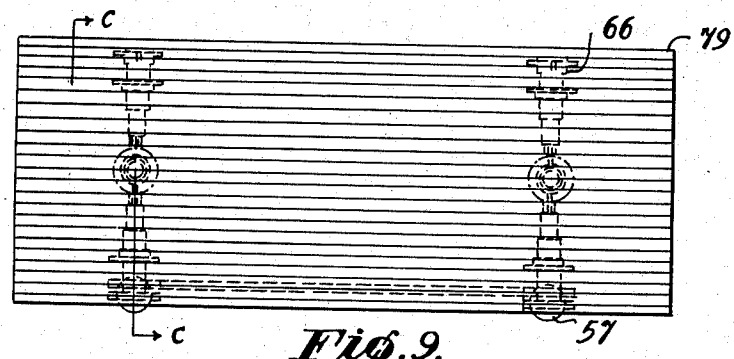

Fig. 9.

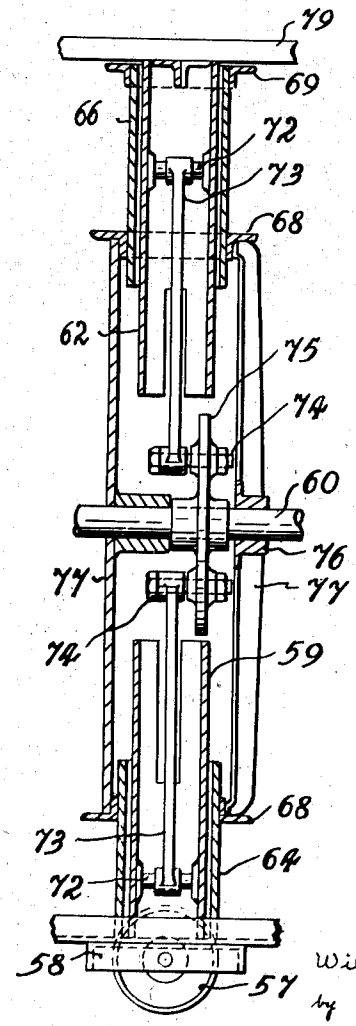

Fig. 11.

Inventor
William Alfred Porter
by
Young, Emery & Thompson
Attys.

Oct. 13, 1942. W. A. PORTER 2,298,839

FORM FOR CONCRETE ARCH CONSTRUCTION

Filed Sept. 17, 1940 3 Sheets-Sheet 3

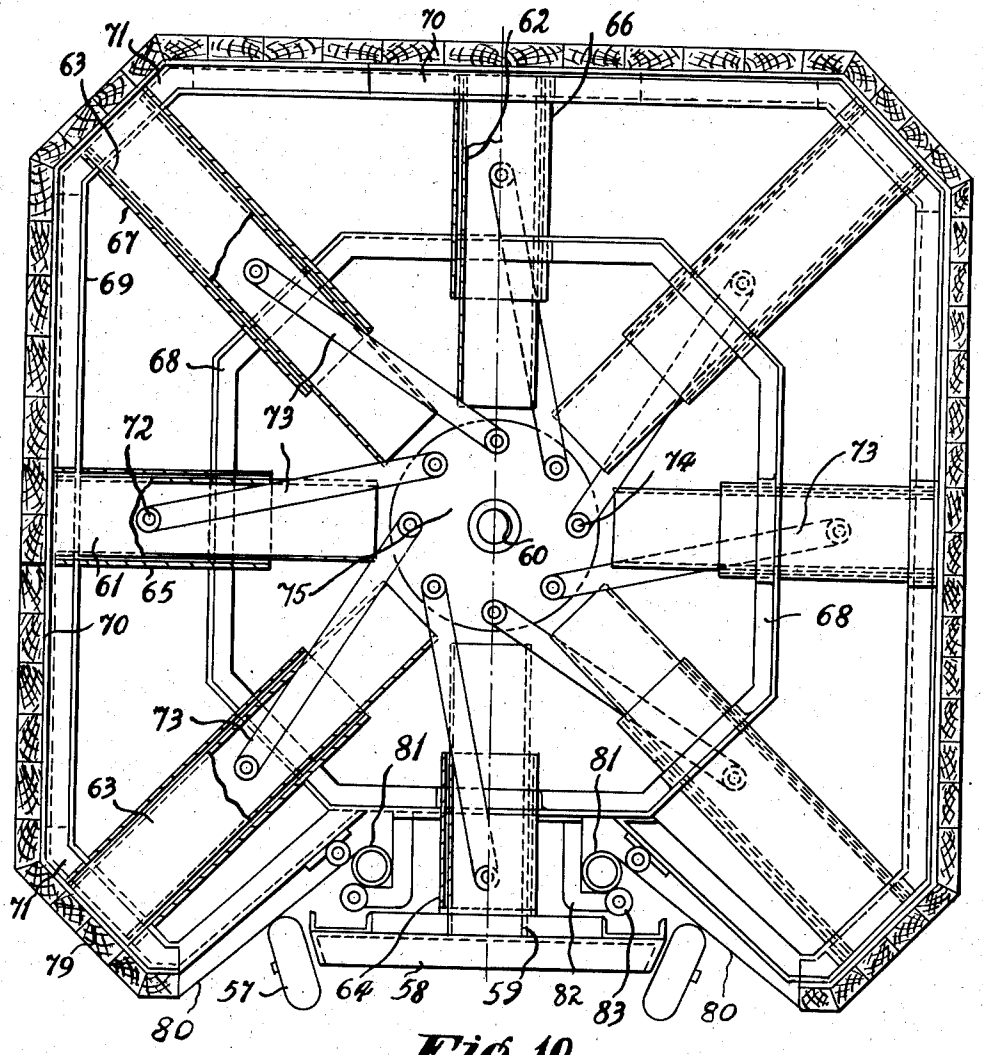

Fig. 10.

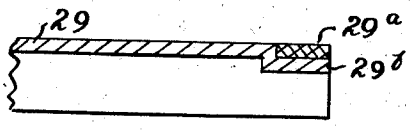

Fig. 12.

Inventor
William Alfred Porter
by
Young, Emery & Thompson
attys.

Patented Oct. 13, 1942

2,298,839

UNITED STATES PATENT OFFICE

2,298,839

FORM FOR CONCRETE ARCH CONSTRUCTIONS

William Alfred Porter, Red Hill, Brisbane, Queensland, Australia

Application September 17, 1940, Serial No. 357,172
In Australia October 30, 1939

15 Claims. (Cl. 25—131.6)

The object of this invention is to provide an improved form which will be light in weight, strong, and convertible for many different contours in arch work connected with concrete constructions.

According to the invention a rigid mould surface adjustable as to contour is covered by a flexible band. The ends of this band are mounted upon winding drums on the underside of the apparatus, which incorporates the means for carrying the band and for expanding it to the contour of the work to be performed. The means for giving the band its desired contour may comprise toms, telescoping tubes, pistons and the like which are capable of being moved radially or outwardly and have at their extremities shaped laths, rods or the like which run longitudinally and form the surface upon which the band is stretched.

The invention will now be described with reference to the accompanying drawings which illustrate apparatus for carrying the same into effect, and wherein:

Figure 1 is a part sectional elevation with the flexible band removed, otherwise in extended attitude ready for the placement of the concrete;

Figure 2 is a section of the line A—A of Figure 1 showing the apparatus mounted in a precast invert, with flexible band in chain dotted lines;

Figure 3 is an enlarged section of the expanding mechanism;

Figure 4 is a part end view of Figure 3;

Figure 5 is an enlarged detail view showing an alternative method of varying the expansion mechanism;

Figure 6 is a part end view of Figure 5;

Figure 7 is an end view of the expanding mandrel;

Figure 8 is a section on the line B—B of Figure 7;

Figure 9 is an elevation of modified apparatus adapted for square section pipes or culverts;

Figure 10 is an enlarged section of Figure 9 on the line C—C;

Figure 11 is a section of Figure 10, and

Figure 12 is a detail view of means for connecting the apparatus in continuous work.

Referring to Figures 1 to 8 inclusive; 20 are wheels on axles 21 carried in brackets 22 upon two discs 23 having holes 24 in ring formation, said discs 23 being spaced by segmental distance pieces 25. Upon rivets or bolts being located in holes 24 and registering holes in distance pieces 25 a rigid framework is provided with radial spaces 26 between distance segments 25. Toms 27 slide in spaces 26, said toms 27 having rounded ends 28 inwardly and laths rods or rollers 29 of wood or metal upon their outer ends. 29a (see Figure 12) is a rubber or the like pad or band upon one end or both ends of laths 29 within recesses 29b in the end or ends of said laths 29. The said laths are preferably shaped to form segments of a true circle of the diameter required to be cast. 30 is a band of suitable flexible material such as rubber impregnated fabric upon the outside of the laths or rollers 29, the ends of said band 30 being upon winding drums 30a and by them drawn tightly upon laths 29. The said winding drums 30a are located in slots 31 upon fixed rollers 32 the latter being mounted on pins on discs 23. The above description covers one set of discs 23, toms 27 and associated parts. Two such sets are shown in the drawings but other numbers may be used, spaced longitudinally upon a common axis. About this axis expanding cones 33 (see Figures 7 and 8) are mounted with cylindrical faces 34, 35 and 36 of progressively increasing diameters connected by sloping surfaces 31 and 38. Although in the drawings three cylindrical and two conical faces are shown, any numbers (within limits) of them in sequence may be provided for progressively increasing the range of the mandrel, or they may be of other shape in cross section to suit the work being done. Grooves 39 and 40 are provided in cylindrical faces 35 and 36 near their bottoms, said grooves having inner sloping faces 41 and 42. In its underside cone 33 has a longitudinal segmental groove 43 running its full length from conical surface 37.

In front of the foremost set and behind the rearmost set of discs 23 fixed discs 44 are located and at their centres hollow bosses 45 are provided. In said bosses 45 a longitudinal spindle 46 having forward squared end 47 to receive a crank is located. Behind said bosses 45 a threaded portion 49 is provided to engage an internally threaded axial hole in the foreward end of expanding cone 33, said spindle 46 being extended longitudinally for the full length of the apparatus. Spindle 46 is surrounded beyond the threaded portion 49 by a pipe 50 firmly welded to and between cones 33. Only the forward cone 33 is provided with a threaded hole the other cone or cones having larger axial holes to accommodate pipe 50. Spindle 46 is located in bosses in discs 44 and provided with thrust bearings and fixed collars to securely hold it in position longitudinally. The end discs 44 are provided with holes

adapted to register with a similar series of holes in discs 23 through which bolts 51 pass and are held by nuts. Said bolts 51 are provided with tubing distance pieces 52 which lie between the end discs 44 and discs 23, and by distance tubing 53 between discs 23. Winding drums 30a are provided with squared ends 54 beyond the discs 44 to receive cranks, ratchets and pawls 55 locking same.

Discs 23 are further provided with segments 23a adapted to receive grooves 43 of expanding cones 33 preventing rotation thereof, which cones have at their rear ends centralizing plates 33a (see Figure 3) snugly surrounding tube 50.

In a modified form discs 23, segmental spacers 25 and holes 24 may be replaced by a boxed sectional or channel section ring 56 (see Figures 3, 5, and 6) with radial holes for housing the toms 27 which latter may be circular in cross section, said rings being provided with the beforementioned slots 31, winding drums 30a, fixed rollers 32 and segments 23a for locating and operating the various parts.

Referring to Figures 7 and 8 the grooves 39 and 40 with sloping faces 41 and 42 are provided to receive the inner ends 28 of the lowermost toms 27.

Figures 9 to 12 inclusive illustrate a modification particularly adapted for square section culverts and the like wherein 57 are wheels upon chassis 58 upon which latter are mounted pistons 59. In the following description only one chassis and piston 59 will be referred to as the parts associated with each are the same. Said piston 59 is one of a series mounted radially about a common axis 60 said series of pistons comprising horizontal pistons 61, top vertical pistons 62 and inclined pistons 63 in respective cylinders 64, 65, 66 and 67, said cylinders being held in a built up framework preferably of angle iron consisting of innner frame 68 and outer frame 69 of somewhat square shape surrounding axis 60. Upon the extremity of pistons 61 and 62 angle iron members 70 are secured at right angles and co-planar with frames 68 and 69 with their extremities adjacent to pistons 63. Upon the ends of pistons 63 T shaped angle iron members 71 have their extremities alongside and adjacent the extremities of members 70.

Within all pistons, gudgeon pins 72 are secured to rods 73. Walls of all cylinders have slots to accommodate the obliquity of rods 73 in their extreme positions. At their lower ends rods 73 are carried upon crank pins 74 on disc 75 mounted upon axis 60 which is carried in bosses 76 on spiders 77. It will be understood that crank pins 74 are mounted in ring or other suitable formation upon disc 75 at predetermined intervals to compensate for the difference of movement of pistons 63, 61, 62 and 59. An alternative to said crank pins being upon the one disc, would be for the pins 74 of pistons 63 to be upon one ring and the pins 74 of pistons 59, 61 and 62 to be upon another ring of suitable radius to govern the distance of movement of the respective pistons.

Frame 69 at its bottom is not continuous but returns upwards and is secured to frame 68. Upon angles 70 and 71 laths 79 of timber or other suitable material are located by bolts. A band 80 is provided whose ends are upon winding drums 81 located between brackets 82 on frames 68 and 69 and between rollers 83. The shaft 60 and winding drums 81 will be provided with squared ends to receive crank handles and both shaft 60 and winding drums 81 will have ratchets and pawls.

Referring to Figures 1 to 8 inclusive; the apparatus as in Figures 1 and 2 is wheeled into position upon a pre-cast invert. When in position the flexible band 30 is loosened by freeing pawls in ratchets 55 thereby freeing winding drums 30a and allowing them to unwind. Axial rod 46 is rotated by a handle upon squared end 47 thereby drawing cones 33 forward which forward motion is imparted by threaded portion 49 within threaded hole of the foremost cone 33 which is prevented from rotation by segment 23a on discs 23. The toms 27 are thus resting upon cylindrical faces 34 and as the cones 33 move forward toms 27 engage conical faces 37 and are moved outwards until they reach the diameter prescribed (for example) by cylindrical faces 35. As the cones 33 are drawn forward the toms 27 remain stationary, the laths 29 on their outer ends having assumed a cylindrical form. The two lowermost toms 27 upon rising up portion of the distance of the conical faces 37 enter grooves 39 in cones 33 and continue moving outwards, this movement being imparted by the lower sloping face 41 of grooves 39. Thus whilst the remaining toms 27 are stationary and laths 29 at their extremities form a cylinder of fixed diameter these two toms 27 are moving outwards. Laths 29 at their ends come gradually into place upon the band 30 which is gripped between laths 29 and the invert and thus locate the apparatus and lift it into its true position ready for operation. The required outside diameter of the form is that given by face 35. If a larger cylinder is required, the cones 33 will be drawn forward bringing toms 27 finally into position on the next face 36 when the lowest disposed toms 27 will move in grooves 40 upon sloping faces 42 as before described. Just before laths 29 are in their correct position, that is whilst the lowest disposed toms 27 are not completely extended, a small clearance is given between lowest laths 29 and the invert. At this stage winding drums 30a are wound up by handles to bring the band 30 snugly upon the laths 29. The handle upon squared end 47 of axial rod 46 is again operated bringing the two lowest disposed toms 27 into their fully extended positions whereupon the band 30 is gripped between the lowest disposed laths 29 and the invert. The apparatus is now ready for pouring of concrete or the like upon the band 30. When the concrete has set and it is desired to withdraw the apparatus, the crank handle upon shaft 46 is rotated in the opposite direction allowing toms 27 to recede upon conical faces 37 to original cylindrical faces 34. To assist the toms 27 to recede, winding drums 30a are again wound up thus bringing band 30 tightly upon laths 29 holding toms 27 firmly on face 34. The apparatus is now ready to wheel forward into a new position. When using this apparatus in continuous work such as a pipe line the rearward end of the band 30 is placed preferably about one inch inside the section already cast before extending the toms 27 and laths 29 as previously described. Any irregularity in the previously formed section may be taken up by a resilient band or pads 29a (see Figure 12) upon the ends of laths 29. The apparatus may be reversed end for end in which case the direction of movement of cones 33 will be reversed. The same apparatus may be used for a number of various diameters or contours by the provision of relatively longer or shorter

toms 27 or by varying the cross section of the cone faces.

Referring to Figures 9 to 11 inclusive; the apparatus is wheeled into position upon wheels 57 on to a floor or invert which has been already provided. Flexible band 80 is released by unwinding drums 81 which have been previously freed of pawls. Axial rod 60 is then rotated in an anti-clockwise direction by means of a handle upon its end thereby partially rotating discs 75 and crank pins 74. As discs 75 rotate, connecting rods 73 and crank pins 74 are operated and cause an outward movement of pistons 59, 61, 62 and 63 being free to move in radial directions within cylinders 64, 65, 66 and 67 held in rigid frames 68 and 69. As pistons 59 move upward they cause the apparatus to be lifted upon chassis 58. Simultaneously angle members upon ends of pistons 61, 62 and 63 move radially outward. Pistons 59, 62 and 61 move vertically and horizontally whilst pistons 63 move radially at an angle of 45° to the horizontal. Thus whilst the apparatus is being lifted the lower ends of angle members 71 upon the pistons 63 are moving downwards and outwards and the downward movement is accommodated by the lifting of the apparatus upon the chassis 58 caused by piston 59. It will be understood that crank pins 74 are so disposed upon the discs 75 that they automatically allow for the relative motions of pistons 59, 61, 62 and 63 and further that crank pins 74 controlling connecting rods 73 operating pistons 59 are again so disposed that they reach the lowest point of their rotation ahead of crank pins 74 controlling the remaining pistons 61, 62 and 63 and being extended on the final stages. Pistons 59 are thereby withdrawing the wheels and allowing the apparatus to come to rest upon laths 79 and band 80 which laths are affixed to angle members 71. Just prior to this final stage when crank pins 74 controlling pistons 59 are at their lowest point of rotation the operation is temporarily suspended and the flexible band 80 is drawn around laths 79 by winding drums 81 which are held by the pawls. In the final stage when the pistons 61, 62 and 63 are moving out to their fullest extent and pistons 59 are partially withdrawing, the laths 79 completely fill the band 80 which is then drawn tightly around the whole apparatus. At the same time the apparatus is lowered by pistons 59 preventing any cutting or abrasion of the band 80 between the laths 79 and the floor. Angle frames 70 upon the ends of pistons 61 and 62 extend beyond the angle frames 71 upon the ends of radially disposed pistons 63 and as pistons 63 move outwards and upwards away from pistons 61 and 62 the angle frames 70 are withdrawn from opposite angle frames 71 thus allowing gaps between laths 79 at such positions. These gaps may if desired be filled with removable laths. It will be understood that while the arc of operations is fixed and held at its two extremities in stops suitably provided, the apparatus can be used for a number of sizes within the limits of cylinders 64, 65, 66 and 67 by replacing connecting rods 73 with rods of greater or lesser lengths.

In its extended attitude the apparatus is ready for the pouring of the concrete or the like and after such work has been done and it is desired to remove the apparatus from this work, firstly the axial rod 60 is partially rotated in a clockwise direction bringing wheels 57 again into contact with the floor. Upon further rotation of axial rod 60 by virtue of the spacings of crank pins 74, pistons 59 withdraw more slowly than pistons 61, 62 and 63 thereby lifting the apparatus from its contact with the floor. When the rotation of rod 60 has been completed and pistons 59, 62 and 63 have completely receded the band 80 is wound tightly around laths 79 by winding drums 81 which remain locked by pawls in ratchets upon their ends. If removable laths have been inserted in the gaps they must be withdrawn before the apparatus can be collapsed. In using this apparatus in continuous work it is preferably placed about one inch within the previous section and upon expanding, any irregularities may be taken up by a resilient band or pads (such as 29a of Figure 12) upon the ends of the laths 79.

Prior to pouring the concrete, templates are placed at the ends of the band upon which templates the screeds are moved to ensure the correct thickness of the concrete.

The wheels 20 are varied according to the diameter of the work to be done; for example if the diameter of the form is increased three inches the wheels will be disposed lower by half that distance to enable the lifting and lowering of the wheels by the lowest toms 27 as before described.

I claim:

1. An improved form for arch concrete constructions consisting of several frames extending transversely of the form and spaced apart longitudinally of the form, a series of toms having radial movement in said frames and extending transversely of the form, laths at the extremities of said toms; stepped cones upon a central shaft passing through said frames; the inner ends of said toms bearing on the cones, means for moving said cones longitudinally for advancing or receding said toms; a flexible band around said laths and pawl controlled winding drums for tightening and loosening said band.

2. An improved form for arch concrete constructions as claimed in claim 1 wherein the said frames are mounted upon wheels by which the form is placed in position upon a precast invert whilst the toms are receded.

3. An improved form for arch concrete constructions as claimed in claim 1 wherein the said wheels and the winding drums upon which the ends of the band are held are located in recesses in the frames at their bottoms.

4. An improved form for arch concrete constructions as claimed in claim 1 wherein grooves in the underside of the cylindrical faces of the cones have sloping faces; the ends of the lowermost toms riding upon said sloping faces thereby advancing further and pressing the band under their lath down to the invert.

5. An improved form for arch concrete constructions as claimed in claim 1 wherein the frames consist of rings spaced apart by segments forming radial spaces for the toms.

6. An improved form for arch concrete constructions as claimed in claim 1 wherein the foremost of the stepped cones is internally threaded and is moved longitudinally upon a threaded axial rod carried in end plates, the other stepped cone being connected by a tube to said foremost cone and being loose upon said rod, said tube surrounding said rod.

7. An improved form for arch concrete constructions of square cross section consisting of a series of lateral frames in each series of which eight fixed cylinders are radially mounted so that

two are vertical, two are horizontal and four are at an angle of forty-five degrees to the horizontal; pistons in said cylinders; straight members upon the ends of the pistons beyond the vertical and horizontal cylinders and T-shaped members upon the pistons beyond the other cylinders; longitudinal laths upon said members; a wheeled chassis secured to the bottom of each lower vertical piston and located in recesses in said frames; a disc upon an axial rod in each frame; connecting rods between pins upon said discs and gudgeon pins on said pistons; slots in cylinders to accommodate to obliquity of said connecting rods; said pins upon said discs being so disposed at predetermined intervals as to compensate for the difference in movements of the various pistons and for lowering the frames to take the chassis wheels away from the floor during concrete pouring operations; and a flexible band around said laths said band having its ends upon winding drums in the recesses of the frame.

8. An improved form for arch concrete constructions comprising a frame, series of movable toms in said frame, longitudinal members at the heads of the said series of toms, means for extending said toms to enable the members to conform to the shape of the work to be done and for locking said toms, a flexible band upon the outside of said members, and unattached thereto, means for tightening said band over said members and maintaining the tension to provide thereby the form surface, and means for retracting the said toms and re-adjusting said band preparatory to removal of the form.

9. An improved form for arch concrete constructions as claimed in claim 8 wherein the means for expanding or retracting the said toms consist of a series of stepped cones the lower ends of said toms riding upon the sloping surfaces and resting upon the faces of said series of stepped cones, the foremost of said series of stepped cones being internally threaded and moved longitudinally upon a threaded axial rod carried in end plates, the others of the series of stepped cones being connected by a tube to the said foremost cone, said tube surrounding said rod.

10. An improved form for arch concrete constructions as claimed in claim 8 wherein the means for tightening or loosening the flexible band consist of a drum upon each side of the frame in recesses on the under side thereof, the ends of said band being secured respectively to a drum, said drums being rotated by a crank handle and governed by ratchets and pawls.

11. An improved form for arch concrete constructions as claimed is claim 8 wherein the said frame is mounted upon wheels by which it is placed in position upon a pre-cast invert whilst the toms are receded.

12. An improved form for arch concrete constructions as claimed in claim 8 wherein grooves in the underside of the faces of the cones have sloping surfaces, the ends of the lowermost toms riding upon said sloping surfaces thereby advancing further and pressing the band under their longitudinal members down to the invert.

13. An improved form for arch concrete constructions as claimed in claim 8 wherein the frames consist of rings spaced apart by segments forming radial spaces for the toms.

14. An apparatus for forming arch concrete constructions comprising a plurality of longitudinal supporting members assembled in tubular formation, means for displacing the members away and toward the center of said formation to increase and decrease the perimeter of said tubular formation, a flexible surfacing member covering the outer surface of said tubular formation, and means for tightening and loosening the flexible surfacing material.

15. An apparatus for forming arch concrete constructions comprising a plurality of longitudinal supporting members assembled in tubular formation, means for displacing the members away and toward the center of said formation to increase and decrease the perimeter of said tubular formation, a flexible surfacing member covering the outer surface of said tubular formation, and drums on which the surfacing material is partly wound for tightening and loosening said material.

WILLIAM ALFRED PORTER.