Feb. 3, 1925. 1,524,905

E. V. BIRDSALL

SPACING DEVICE FOR PUNCHING OR SLOTTING MACHINES

Filed July 27, 1922 4 Sheets-Sheet 1

Fig. 1

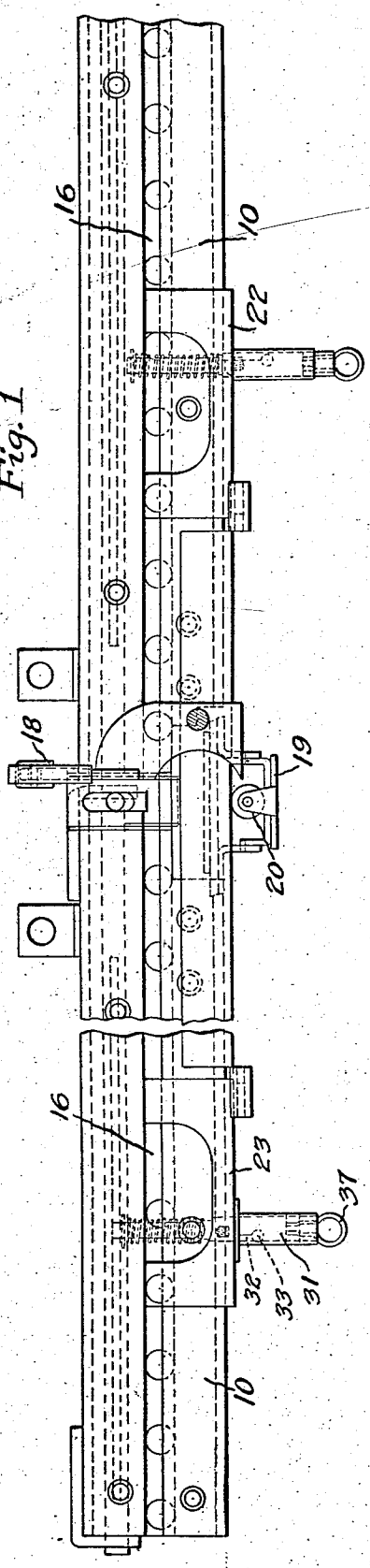

Fig. 2

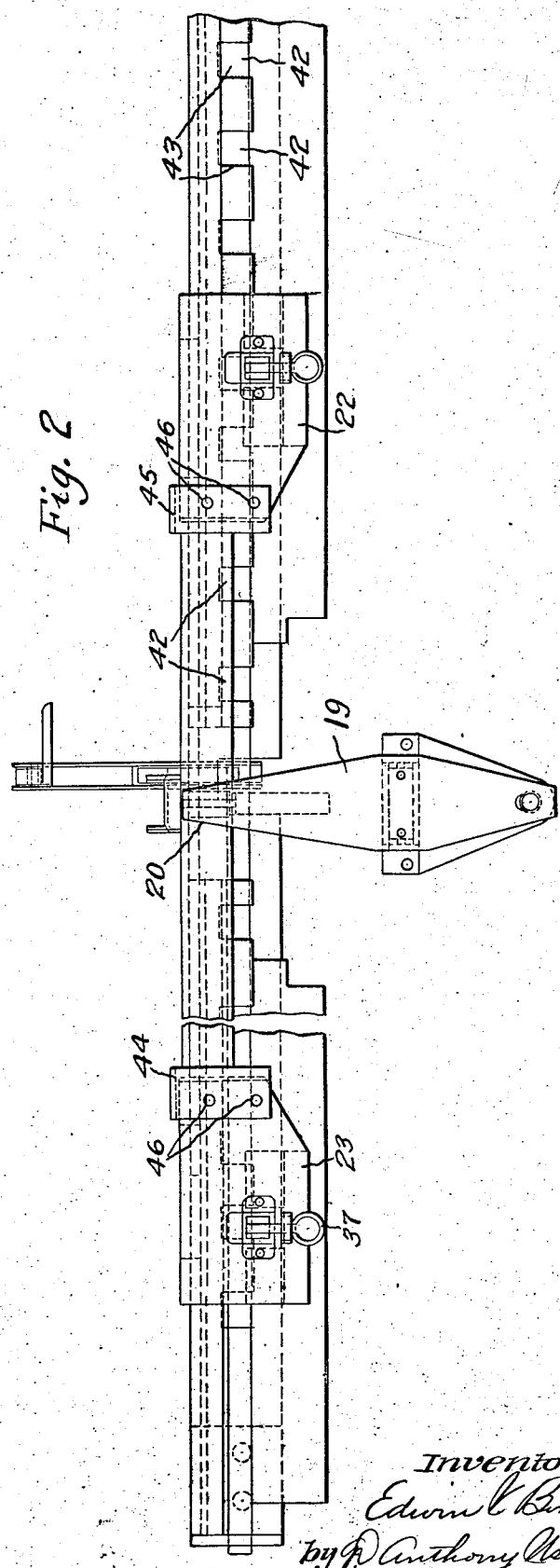

Inventor:
Edwin V. Birdsall
by P. Anthony Veina
Atty.

Feb. 3, 1925. 1,524,905

E. V. BIRDSALL

SPACING DEVICE FOR PUNCHING OR SLOTTING MACHINES

Filed July 27, 1922 4 Sheets-Sheet 2

Fig. 3

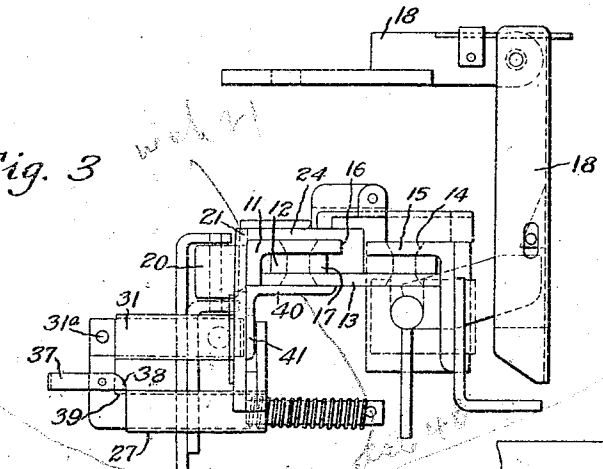

Fig. 4

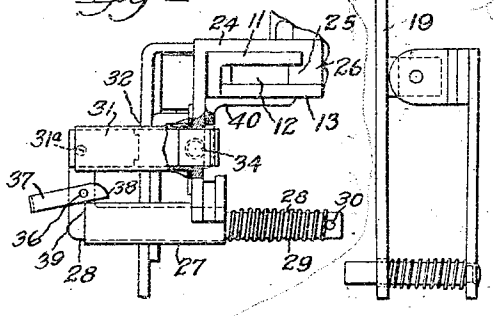

Fig. 5

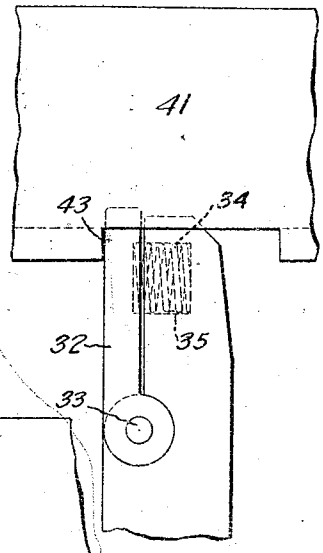

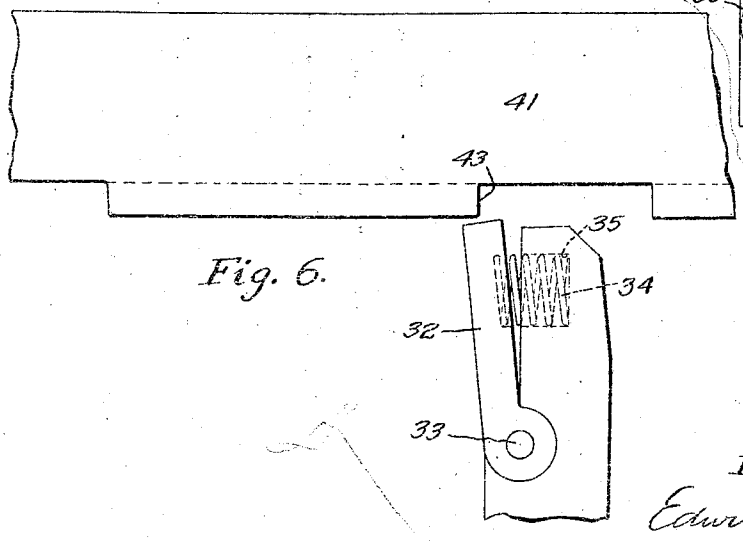

Fig. 6.

Inventor:
Edwin V. Birdsall
by D. Anthony Daina
Atty.

Feb. 3. 1925. 1,524,905

E. V. BIRDSALL

SPACING DEVICE FOR PUNCHING OR SLOTTING MACHINES

Filed July 27, 1922 4 Sheets-Sheet 3

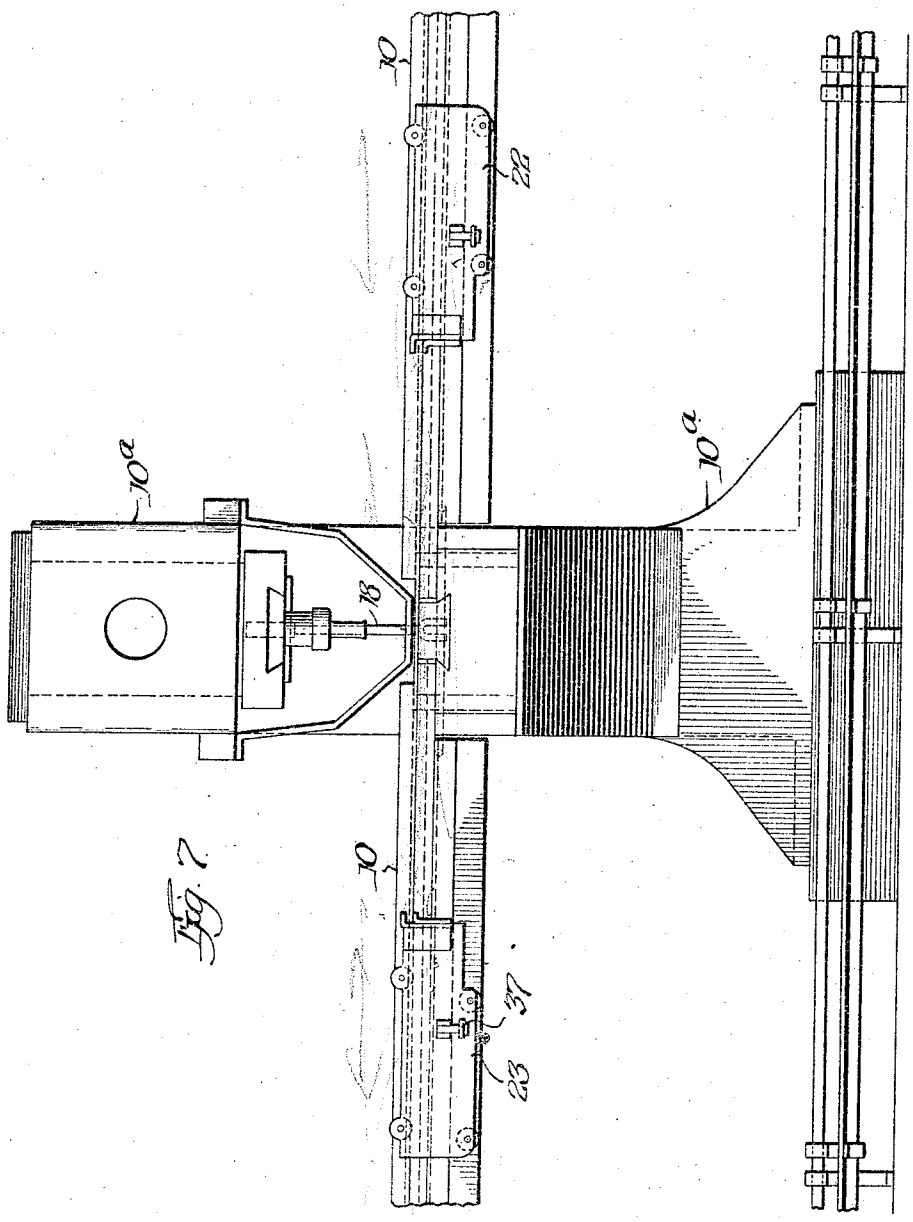

Fig. 7

Witness:
Fred. C. Davison

Inventor:
Edwin V. Birdsall
By R. Anthony Usina
Atty.

Feb. 3, 1925. 1,524,905

E. V. BIRDSALL

SPACING DEVICE FOR PUNCHING OR SLOTTING MACHINES

Filed July 27, 1922 4 Sheets-Sheet 4

Fig 8.

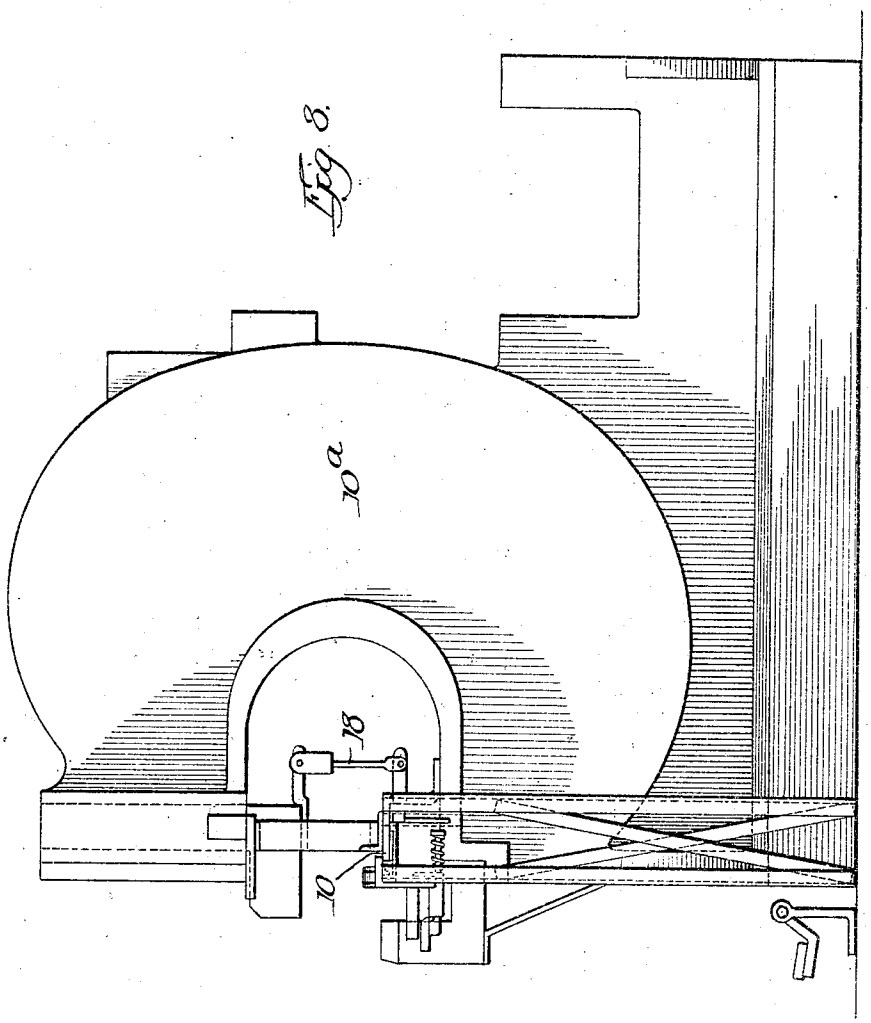

Witness:

Inventor
Edwin V. Birdsall

By Anthony Usina
Atty.

Patented Feb. 3, 1925. 1,524,905

UNITED STATES PATENT OFFICE.

EDWIN V. BIRDSALL, OF JOLIET, ILLINOIS.

SPACING DEVICE FOR PUNCHING OR SLOTTING MACHINES.

Application filed July 27, 1922. Serial No. 577,847.

To all whom it may concern:

Be it known that I, EDWIN V. BIRDSALL, a citizen of the United States, residing at Joilet, in the county of Will and State of Illinois, have invented certain new and useful Improvements in a Spacing Device for Punching or Slotting Machines, of which the following is a specification.

My invention relates to a spacing device for punching or slotting machines and has particular reference to an apparatus which is applied to the table of a punching press or a slotting machine and insures accuracy in the punching of rivet holes and the like in plates, angles and the like without the necessity of laying out the work beforehand or marking the places where the holes are to be placed in the work piece.

The primary object of my invention is the provision of a spacing device which eliminates the laying out of the work and which insures accuracy in the punching of plates, thus eliminating waste and is also a time and labor saver because when my device is used, the work piece is so placed under the punching dies that the holes or slots will be properly positioned without measuring or laying out the work.

Another and further object of my invention is the provision of a spacing apparatus which is positive in its operation and which is so constructed that unless the device is in proper position and in proper register with the templet used for spacing purposes the work piece is not in proper position which can be told at a glance by the operator.

These and other objects of my invention will be more fully and better understood by reference to the accompanying sheets of drawings in which—

Figure 1 is a plan view of the work table of a punching press embodying my invention;

Figure 2 is a side elevational view of my improved device;

Figure 3 is an end elevational view of the device shown in Figures 1 and 2;

Figure 4 is a detailed view partially in section and partially in elevation of the latching mechanism;

Figure 5 is a detailed sectional view of the latch in engagement with the templet;

Figure 6 is a detailed view showing the latch out of engagement with the templet.

Figure 7 is a front elevational view of punch press showing the feed table attached thereto, and

Figure 8 is a side elevational view of the punch press shown in Figure 7.

Referring now specifically to the drawings, a work table 10 of a punching press 10^a is shown, which is positioned at the front of the press and extends to each side thereof so as to support a work piece thereon and is built up of an L-shaped member 11 to which a spacing member 12 is secured, mounted upon a plate 13, and an angle 14 also secured to the plate 13 by means of rivets 15, the ends of the members 11 and 14 being separated so that a slot 16 is formed extending longitudinally of the work table 10. The spacer 12 has its inner edge 17 terminating short of the inner side of the member 11 so that the member 11 projects over the edge 17 forming means whereby the spacer carriages hereinafter described are held in position upon the work table 10. An ejector or kick-out mechanism 18 is shown above the work table 10 which forms no part of my present invention. A vertically extending member 19 is also provided having a roller 20 mounted in its upper end thereof which is adapted to hold an angle-iron 21 in position against the work table 10, this holding device forming no part of my present invention.

Mounted upon each side of the punching head of the press is a pair of spacer carriages 22 and 23, the carriage 23 being composed of a member 24 in sliding contact with the member 11, the said member 24 having a hook 25 formed on its inner end 26 which terminates under the end of the member 11 so that the end 26 of the member 24 is movable longitudinally in the slot 16 on the upper side of the work table 10 and the spacer carriage is held in position upon the work table 10. At the lower side of the member 24 is a short hollow member 27 having an L-shaped member 28 extending therethrough with a coil spring 29 mounted upon the inner end thereof with a pin 30 holding the spring 29 in position so that the tendency of the spring 29 is to pull the member 28 inwardly. At the upper end of the member 28 is mounted a latch 31 by means of a pin 31^a, the said latch being cut away at one of its sides and having a hinged member 32 secured thereto by means of a

pin 33 with a coil spring 34 inserted in a recess 35 in the end of the latch 31, the member 32 extending inwardly a slight distance beyond the end of the member 31. Secured to the outer end of the member 28 by means of a rivet 36 is a latch 37 pivotally mounted upon the member 28 so that its inner end 38 engages against the outer end 39 of the member 27 when it is desired to have the spacer carriage unlatched from the templet described hereafter. Mounted upon the under side of the member 13 is a templet 40 angular in cross sectional and having a downwardly extending portion 41 with a plurality of notches 42, 42 therein having square shoulders 43, 43 at one side of the notches 42 which are adapted to be engaged by the hinged portion 32 on the latch 31. The templet 40 extends along on the underside of the work table 10 for its entire length with the notches 42 therein being spaced the same distance as holes or slots are to be punched in the work piece. Each of the spacer carriages 22 and 23 has plates 44 and 45 secured thereto respectively by means of rivets 46, the plates being secured to the outer side of the carriages 22 and 23 and project over the edge of the angle 21 so that it is held in proper position upon the working table by means of the spacer carriages and the member 19 as hereinabove described.

In operation of the device, if for instance, it is desired to slot an angle such as 21 as shown in the press or punch bolt holes therein, the angle is placed upon the work table 10 and the carriage 22 brought up against the end thereof with the latch 31 engaging in the notches 42 in the templet 40. The operator by pushing down on the outer end of the latch 37 raises the inner end so the spring 29 pulls the latch inward against the outer side of the templet 40 and so the spacer carriage 22 is moved along the member 43 against the shoulder 42 with the carriage pushed up against the end of the angle 21. The opposite carriage 23 is then brought up against the opposite end of the work piece and because of the positioning of the notches 42 the work piece 21 is in position under the punching dies for the first operation which, after being completed, the operator releases each of the spacer carriages 22 and 23 by pulling outward on the handles 37 when the two spacer carriages can be moved from one side to the other and the angle moved to the next set of notches 42 on the templet 40 when the angle 21 is in position for another operation of the press. The purpose of the member 32 which is secured to the latch 31 is to make sure that the latches 31 are in proper position in the notches 42 and immediately upon the latch being released, the spring 34 pushes the member 32 outward (as shown in Figure 6) so the carriage must be moved back and the spacer carriage brought up behind the work piece again and pushed into proper position with the latch 32 engaging against the shoulder 43 and the notch 42. The spring 34 is only sufficiently strong to push the latch 32 outward and only overcome very slight resistance so that there is no appreciable amount of resistance afforded to the movement of the carriage by the spring 34 so that the carriages can be easily moved up and into position on the punching table 10. The carriages 22 and 23 are duplicates of each other except that the latches are made in rights and lefts, the hinge portion 32 being on the far side of the carriage with respect to the punching dies of the press, that is, the pressure of the work piece on the spacer carriages 22 and 23 has a tendency to force the latch 32 in the position shown in Figure 5 of the drawing.

While I have described more or less precisely the details of construction, I do not wish to be understood as limiting myself thereto, as I contemplate changes in form and the proportion of parts and the substitution of equivalents as circumstances may suggest or render expedient without departing from the spirit or scope of my invention.

I claim:

1. A spacing device comprising in combination with a work table, a plurality of movably mounted carriages supported by said table, templets having spaced recesses therein secured to said punch press table, and latching means carried by said carriages for engagement with the recesses in said templets.

2. A spacing device comprising in combination with a punching press, a work table, a plurality of slidably mounted carriages upon said work table, templets having notches therein secured to said table, latches carried by said carriages adapted to engage the templets at the notches thereof, the said latches having spring pressed hinge portions adapted to abut against the templets.

3. A spacing device comprising in combination a work table, templets having notches therein, secured to said work table, a plurality of carriages adapted to abut against a work piece on said work table, latching members carried by each of said carriers adapted to engage the templet, the latching means comprising a hingedly mounted leaf member adapted to engage the templet and to prevent the reengagement of said latch when once out of position without repositioning the work piece.

4. A spacing device comprising in combination with a work table having a longitudinally extending recess therein, a plurality of movably mounted carriages having hooked portions which extend into said recess and engage the table, templets having

spaced openings therein, secured to said work table and spring latch members adapted to engage the templets.

5. A spacing device comprising in combination with a work table, a plurality of movably mounted carriages on said table adapted to abut against each end of a work piece, templets having spaced notches therein, secured to said table, and latches on said carriages adapted to engage the notches in the templets whereby a work piece is properly positioned under the punching dies.

6. A spacing device comprising in combination with a work table, a plurality of movably mounted carriages on said table adapted to abut against each end of a work piece, latches carried by said carriages, templets having notches therein with which the said latches engage, secured to the said table, the said latches being hinged to the said carriages, spring pressed end portions on the sides opposite to that against which the work piece abuts whereby the latch entering a notch in the templet is pushed forward thereof and thence backward into engagement with the templet.

Signed at Joliet, Illinois, this 19 day of July, 1922.

EDWIN V. BIRDSALL.