Aug. 5, 1930. C. H. D. HAYWARD 1,772,147

ELECTRIC SWITCH

Filed March 3, 1927

Fig. 1.

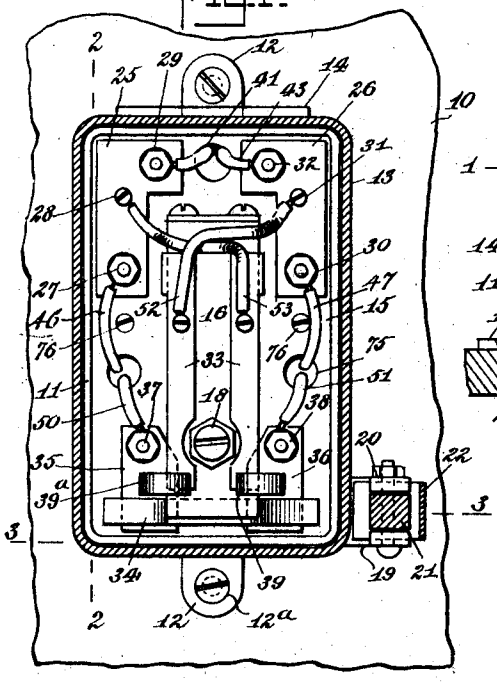

Fig. 2.

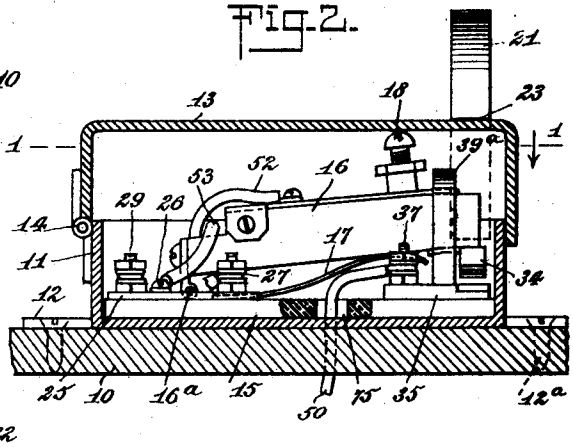

Fig. 3.

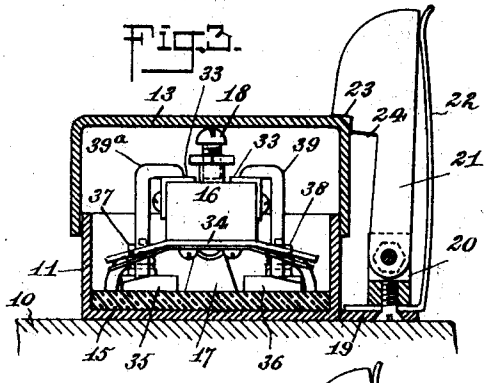

Fig. 4.

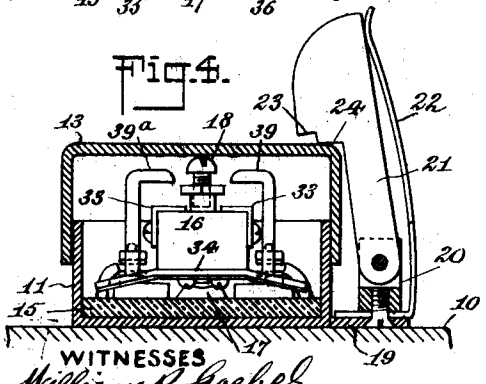

Fig. 5.

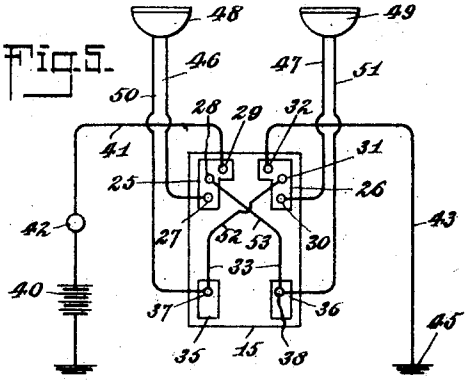

Fig. 6.

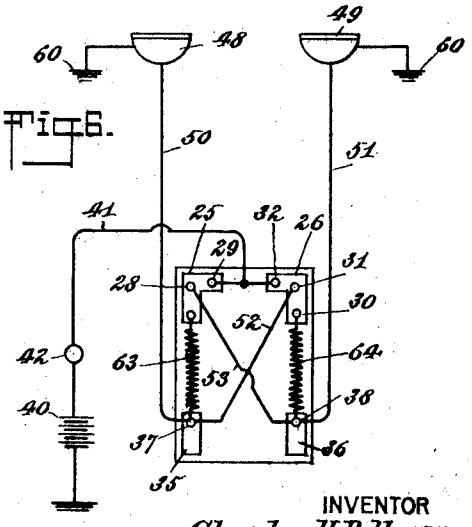

WITNESSES

William P. Goebel

Francis J. Foster

INVENTOR

Charles H. D. Hayward

BY Munn & Co.

ATTORNEY

Patented Aug. 5, 1930 1,772,147

UNITED STATES PATENT OFFICE

CHARLES H. D. HAYWARD, OF WEST ORANGE, NEW JERSEY

ELECTRIC SWITCH

Application filed March 3, 1927. Serial No. 172,453.

The present invention is concerned with a switch capable of a wide range of utility, but primarily designed for controlling the headlight circuits of an automobile. Various means may be used for operating the switch, but the present design is intended for pedal operation, means being provided whereby the driver of a car may readily step on the switch box to dim the headlights, or readily pedally release the switch to brighten the lights.

An object of the invention is to provide a switch of this character so designed that the headlights of a car may be conveniently dimmed by throwing the switch to connect the lights in series instead of in parallel. Where a single wire light is used, the switch is arranged to selectively throw resistances into or out of the parallel lamp circuits.

An object of the invention is to provide a switch mechanism mounted in a casing and to use the hinged cover of the casing as a pedal for selectively throwing the switch, automatic latching means being associated with the cover for retaining the same in depressed position. The latch means itself may be readily disengaged by a slight movement of the operator's foot.

Other objects of the invention are to provide a switch of simple, practical construction, which will be rugged, durable and efficient in use, which will occupy but little space when installed in an automobile, which may be operated with expedition and facility, and which is well suited to the requirements of economical manufacture and convenient installation.

With the above noted and other objects in view, the invention consists in certain novel features of construction and combinations and arrangements of parts, as will be more fully hereinafter set forth and pointed out in the claims. The invention may be more fully understood from the following description in connection with the accompanying drawings, wherein—

Fig. 1 is a sectional plan view of a switch embodying the present invention taken approximately on the line 1—1 of Fig. 2.

Fig. 2 is a longitudinal sectional view taken approximately on the line 2—2 of Fig. 1.

Fig. 3 is a transverse sectional view on the staggered line 3—3 of Fig. 1.

Fig. 4 is a view similar to Fig. 3, but showing the casing cover depressed and latched and the switch in position to connect the headlights in series instead of in parallel.

Fig. 5 is a wiring diagram showing the manner of hooking up the switch for selective parallel or series operation of two headlights.

Fig. 6 is a wiring diagram showing the manner of wiring the switch for single wire lamps connected in parallel and using resistances to effect dimming.

In the drawings I have used the reference numeral 10 to designate a suitable mounting for the switch, such for instance as the floorboard or dash-board of an automobile. Mounted upon this support is an open box-like housing 11 preferably of metal and formed with integral ears 12 for the reception of securing devices 12^a which anchor the box to the support. A flanged box cover 13 is hingedly connected to one upper end of the box as at 14, and is adapted to coact with the box to define a closed housing for a switch mechanism mounted upon an insulating base plate 15 in the bottom of the box 12.

This switch mechanism includes a swinging arm 16 of insulating material hingedly connected as at 16^a to the base plate 15, and normally urged upwardly by a spring 17 to slightly elevate the cover 13, the cover being elevated by an adjustable screw 18 mounted in the arm 16.

An ear 19 projecting laterally from the box 11 carries a bracket 20 in which is fulcrumed the lower end of a latching lever 21 urged into operative engagement with the

box cover 13 by a flat spring 22. A pair of stepped shoulders 23 and 24 are formed in the latching end of the lever 21. When the spring 17 is operative to raise the arm 16, and with it the cover 13, the upper shoulder 23 normally engages the cover 13 to prevent further upward movement of the box cover. When the arm 16 is depressed by stepping on the box cover 13, lever 21 is urged inwardly by its spring 22, and the box cover latched under the shoulder 24 thereby maintaining the arm 16 in depressed position. To release the arm 16, the operator simply kicks the lever 21 to one side, at which time the spring 17 swings the arm 16 and cover 13 upwardly until the cover is again engaged by the shoulder 23.

Secured to the corners of the plate 15 adjacent the hinged end of the arm 16 are a pair of L-shaped conductive plates 25 and 26. Plate 25 preferably mounts three electrical terminals 27, 28 and 29, while plate 26 mounts a similar number of terminals 30, 31 and 32. The arm 16 on its upper surface carries a paced pair of conducting plates 33, and at its free end mounts on its under face a spring switch arm 34 adapted when the arm 16 is depressed to coact with a pair of stationary contact blocks 35, 36 mounted on the corners of the plate 15 adjacent the free end of the arm 16. Rising from the blocks 35, 36 are a pair of hooked stop members 39a, 39 limiting the spring-pressed upward movement of the arm 16, and contacting with the conductor plates 33 when arm 16 has been urged upwardly to the limit of its movement by the spring 17.

Contact blocks 35 and 36 carry electric terminals 37 and 38 respectively. In Fig. 5, I have illustrated a wiring diagram showing the manner in which the switch may be hooked up to control the headlights of an automobile by selectively connecting the lights in parallel or in series to brighten or dim them as will be readily understood. In this view the battery is indicated at 40, connected by a conductor 41 to the terminal 29, the usual hand switch 42 being provided. Terminal 32 is connected by a lead wire 43 to a ground 45. Conductors 46, 47 connect the lamps 48 and 49 to the terminals 27 and 30 respectively. Other conductors 50, 51 connect the lamps to the terminals 37 and 38 respectively. Electrical conductors 52, 53 connect the terminals 29, 32 to the switch bars 33.

With this hook-up, it will be seen that with the switch arm in the elevated position of Fig. 3, the lamps are connected in parallel. Depression of the switch arm automatically breaks the connection between the terminals 28 and 31, and terminals 37 and 38, and bridges the contacts 37 and 38 by the switch arm 34, thereby connecting the two lamps in series to dim them.

In the wiring diagram of Fig. 6, each lamp is grounded at 60, and the lead 41 from the battery, connected to the terminals 29 and 32. Wires 46 and 47 are eliminated and resistances 63, 64 are bridged across the contacts 27, 37 and 30, 38 respectively. Here, as will be readily seen, when the switch is in elevated position, the resistances are in shunt and inoperative. As the switch arm 16 is depressed, connections between the plates 25 and 26 and the contact blocks 35 and 36 must be made through the resistances, thereby dimming the lights.

Aligned openings 75 in the plate 15 and bottom of the box 11 provide for the convenient looping in of the various wires which are used to hook up the switch in the lamp circuits, and any suitable means such for instance as the screws 76 may be used for holding the plate 15 in position on the bottom of the box 11.

Obviously, various changes and alterations might be made in the general form and arrangement of the parts described without departing from the invention. Hence I do not wish to limit myself to the details set forth, but shall consider myself at liberty to make such changes and alterations as fairly fall within the spirit and scope of the appended claims.

I claim:

1. In an electric switch, a switch box and a movable cover therefor, a switch in the box including a movable switch member normally spring pressed upwardly to lift the cover, means coacting with such switch member to establish electrical circuits when the member is raised to one position, means coacting with the switch member to establish other electrical circuits when the member is depressed against the action of the spring in a second position, and automatic means engageable with the cover acting to latch the cover and the switch member against spring pressed upward movement when they have been moved in either of said positions.

2. In an electric switch, a switch box and a movable cover therefor, a switch in the box including a movable switch member normally spring pressed upwardly to lift the cover, means coacting with such switch member to establish electrical circuits when the member is raised, means coacting with the switch member to establish other electrical circuits when the member is depressed against the action of the spring, and automatic means acting to latch the cover and the switch member against spring pressed upward movement when they have been depressed, said latching means comprising a pivoted lever notched to engage the switch box cover, and a spring urging the lever into latching position when the cover has been depressed sufficiently to clear the notch.

3. In an electric switch, a switch box and

a movable cover therefor, a switch in the box including a movable switch member normally spring pressed upwardly to lift the cover, means coacting with such switch member to establish electrical circuits when the member is raised, means coacting with the switch member to establish other electrical circuits when the member is depressed against the action of the spring, and automatic means acting to latch the cover and the switch member against spring pressed upward movement when they have been depressed, said cover adapted to be pedally depressed, said latch means including a latching lever spring-pressed into latching engagement with the cover when the latter has been depressed sufficiently to establish the second mentioned circuits and adapted to be pedally kicked out of latching position to permit the spring to restore the switch member and cover to normal elevated position.

4. A device of the class described in claim 3, wherein the switch includes means for limiting the upward spring pressed movement of the switch member and the lever includes means for limiting the upward movement of the cover.

5. A switch including an insulating base plate, a pair of contact plates on the base plate, an insulating switch arm pivoted to the base plate and a pair of spaced conducting plates on the switch arm electrically connected to the contact plates, a pair of contact blocks on the base plate and upstanding hook portions on the blocks limiting the upward swinging movement of the switch arm and contacting with the conductor plates when the switch arm is elevated, a spring normally maintaining the switch arm in elevated position, and a contact block bridging member of conductive material carried by the switch arm insulated from the conductive strips and adapted to electrically connect the contact blocks when the switch arm is depressed against the action of its spring.

6. In a switch, a base plate and a pivoted switch arm pivoted at one end and having its free end normally spring pressed upwardly, a pair of contact members associated with the free end of the switch arm and including means to limit the swinging movement of the arm in both directions, said switch arm including conductive plates, insulated from each other and individually forming contacts with the separate contact members when the arm is elevated in one position, and including a bridging piece for directly connecting the contact members when the arm is depressed in a second position, and means operable in conjunction with said switch arm to releasably hold it in either of said positions.

7. In an electrical switch, a switch box and a hinged cover therefor, a switch in the box including a base plate and a pivoted contact arm, a spring urging the arm upwardly, and means associated with the arm for lifting the cover as the arm is elevated by the spring, said cover adapted to be pedally depressed to swing the contact arm downwardly against the action of the spring, and automatic latch means associated with the cover adapted to hold the cover depressed and arranged to be pedally released by a sliding movement of the foot across the switch box cover to release the cover.

CHARLES H. D. HAYWARD.