Feb. 14, 1939. A. L. SHERWOOD ET AL 2,146,861

CONTAINER

Filed July 15, 1937

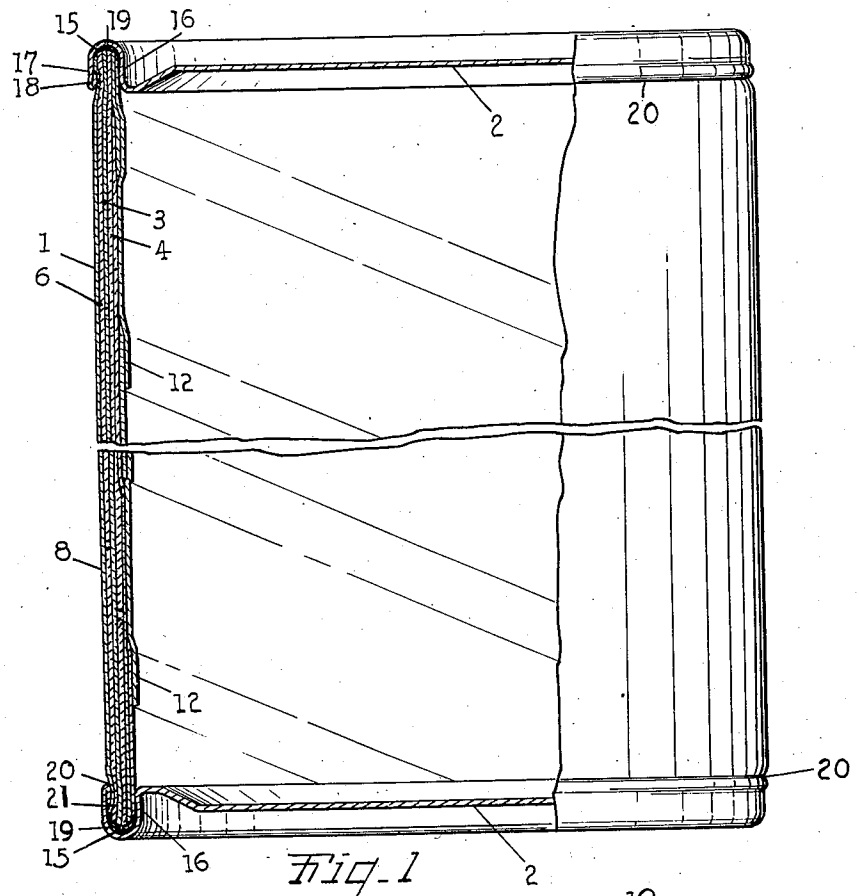


Fig. 1

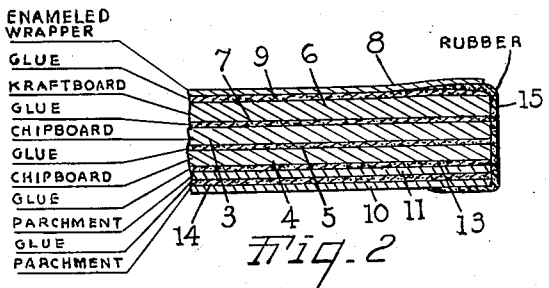


Fig. 2

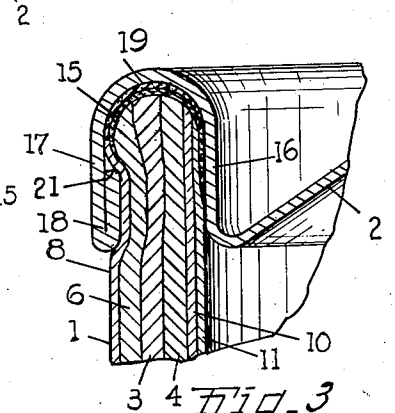


Fig. 3

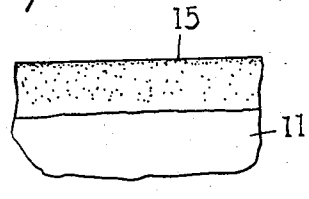


Fig. 4

INVENTORS
Albert L. Sherwood
James E. Annen
BY Earl F. Chappell
ATTORNEYS

Patented Feb. 14, 1939

2,146,861

# UNITED STATES PATENT OFFICE

2,146,861

## CONTAINER

Albert L. Sherwood and James E. Annen, Kalamazoo, Mich., assignors to Sutherland Paper Company, Kalamazoo, Mich.

Application July 15, 1937, Serial No. 153,694

11 Claims. (Cl. 229—3.5)

The main objects of our invention are:

First, to provide a container preferably of cylindrical form which is suitable for packaging oils and greases whereby the same may be conveniently retailed at filling stations and in stores.

Second, to provide a container of the type described which is rendered impermeable to oil and grease both at the side wall thereof and at the top and bottom closing members.

Third, to provide a container of the type described which is readily and cheaply manufactured and which is rigid and otherwise resistant to destruction in use.

Other objects relating to details and economies of our invention will definitely appear from the description to follow. The invention is defined in the claims.

A preferred embodiment of our invention is illustrated in the accompanying drawing, wherein:

Fig. 1 is a view in elevation, partially broken away and in longitudinal section, of the container of our invention.

Fig. 2 is a fragmentary enlarged view illustrating the construction and assembly of the cylindrical laminated side wall and further illustrating sealing compound as applied thereto according to our invention.

Fig. 3 is a fragmentary magnified view in section illustrating details of assembly of the top or bottom member with the laminated side wall.

Fig. 4 is a fragmentary view illustrating a portion of the inner side of the laminated wall of our container.

This invention relates primarily to a container which is adapted to be used as a package for oils, greases, or other similar substances, which materials possess characteristics normally making it impossible to enclose the same in ordinary paper containers. Heretofore, such substances have largely been packaged in the well known tin containers.

An important feature of our invention is in the provision of a stiff fibrous or paper container made of kraft and chip board and rendered oil and grease proof by an inner sealing surface of vegetable parchment or artificial parchment. This material is in a large measure grease proof or proof against permeation by oils, greases, and such substances; however, it is a fact that all fibrous materials, such as vegetable parchment, or partially parchmentized paper, and even foil, and "Cellophane", and like materials, contain very small openings known as "pinholes" which cause the materials to be only partially leak proof. Our invention comprehends the use of a plurality of plies of parchment or other thin lining material on the theory that pinholes in the individual plies are very unlikely to coincide when the plies are assembled, with the result that a perfectly oil and leak proof structure is produced. Further important features of our invention will appear from the specification to follow.

Referring to the drawing, the reference numeral 1 indicates in general the cylindrical laminated side wall of a container which is closed at its open ends by top and bottom members 2 of similar construction.

The laminated side wall is made up of a plurality of layers of relatively thick paper board to provide a stiff cylindrical body, in the following manner. Two plies 3, 4 of chip board, each approximately .015 inch in thickness, are superposed on one another and locked together by a film 5 of adhesive, the double ply chip board layer being wound spirally. A layer 6 of kraft board, approximately .025 inch in thickness, is wound upon and secured to the outermost ply of the chip board by a film 7 of adhesive, the kraft board also being in the form of a strip wound spirally. A suitable conventional enameled wrapper or label 8 containing any desired design or advertising matter is adhesively secured to the kraft board layer by a film 9 of glue.

The inner or oil sealing surface of the side wall is formed by a double ply lining layer of imitation parchment, each ply being of a thickness of approximately .0025 inch. The parchment plies 10, 11 are overlapped approximately one-half their width in order to form a double thickness layer when wound and are each spirally wound as indicated at 12 on a suitable mandrel (not shown) whereby the winding joints are overlapped and sealed. A film 13 of adhesive secures the double ply parchment layer to the inner ply 4 of chip board and an adhesive film 14 locks the plies of the imitation parchment to one another. The lining strips are wound in overlapping relation, preferably with half laps as shown.

It will be understood that the four films of adhesive 7, 5, 13, and 14 are coextensive in area with the various layers or plies of the wall joined by the same, so that any tendency to absorb or leak is further prevented. The joints of the successive layers are also staggered. In practice, we use a dextrin glue as the alhesive; however the invention is not limited to that particular type and we may successfully employ animal or hide glue or casein or any other suitable adhesive.

For the purpose of preventing the oil with which the container is filled from permeating the ends of the container wall during filling, we apply a sealing coating 15 at the raw ends of the container wall layers. We preferably use a coating which is a mixture of rubber latex and casein according to a well known formula and we apply the same by spraying the ends and inner sides of the container wall as illustrated in Figs. 2 and 4, the latter figure illustrating the coating 15 as viewed from the inside of the wall. Inspection of Fig. 2 reveals that coating 15 is applied prior to the application of label 8, whereby the exterior appearance of the same will not be marred.

Coating 15 has a double function; namely, it prevents the absorption of any oil that may drop upon or be splashed upon the wall edges during the filling and capping steps, and it further serves as a sealing medium as will be hereinafter described.

To complete the container, the top and bottom members 2, which are pressed out in cup shape to provide walls 16 tightly engaging the inner side wall and an outer peripheral flange 17, are inserted in the cylindrical side wall and pressed inwardly. The edge of flange 17 is bent reversely at 18 to provide a reinforced bead and a layer 19 of sealing compound similar to that of coating 15 is placed in the channel formed between wall 16 and flange 17, the said layer extending around the channel and when brought into contact with coating 15 serving to effectively seal the upper end of the container wall.

After the top and bottom members are properly seated, similar steps being followed in the case of the bottom member as above described with reference to the top member, they are locked against the side wall by spinning flange 17 inwardly against the side wall to form the annular locking indentation 20 therein, or at least in the label and the outer kraft plies of the said side wall. With this locking engagement, it will be found that it will be impossible to remove the top and bottom members without destroying the container. Of course, the contents of the container are placed therein prior to closing of one of the top or bottom members and the contents may be removed by puncturing one of the members. Using a container of this type, it is impossible to remove one of the end members for the purpose of adulterating or diluting the contents.

The inner or sealing surface of the wall of our container is impervious to penetration by oils, greases, or other substances enclosed therein, due, first, to the leak proof qualities of the imitation parchment which is preferably employed, and second, to the fact that the double ply construction of the sealing layer removes any possibility of leakage by effectively sealing the inevitable pinholes present in the plies. The varnished label and the plurality of films of adhesive, four in number, still further contribute to a perfect sealing effect by entirely eliminating the possibility of seepage through or along the container wall. The multi-ply wall structure in which the plies are secured together by the adhesive is very strong and rigid and may be economically produced. The end sealing of the top and bottom of the container wall and locked top and bottom members complete the provisions for proofing the container.

The inturned edge of the outer flange 17 of the end member stiffens and reinforces the flange and is quite effective in preventing its opening up or yielding even when the can is subjected to a very substantial shock as may occur in handling or shipping.

It will be understood that the container is designed primarily for containing liquid such as oil and the filled can is of considerable weight. This inturned edge also provides an engaging part 21 which when the flange is indented or crimped into the container wall serves to effectively resist stripping of the cover. The sealing material indicated at 15 effectively seals the joint between the inner flange of the end member and the container wall and the sealing material 19 supplements this sealing material 15 and forms a very effective seal of the joint.

Although the lining plies are preferably of imitation parchment paper, it will be understood that other materials or combinations of materials may be used, the multi-ply lining layers being highly effective in preventing leakage and overcoming a very serious defect in previous structures.

We have illustrated and described our improvements in an embodiment which we have found very practical. We have not attempted to illustrate or describe other embodiments or adaptations as it is believed this disclosure will enable those skilled in the art to embody or adapt our improvements as may be desired.

Having thus described our invention, what we claim as new and desire to secure by Letters Patent is:

1. In a container for oil and grease, a cylindrical side wall comprising a laminated body consisting of a plurality of plies of spirally wound superimposed chip board adhesively secured to each other, a relatively thick spirally wound outer ply of relatively tough kraft board adhesively secured to said plies of chip board, a label provided with a moisture resistant coating adhesively secured to said kraft board ply, two relatively thin inner liner plies of imitation parchment spirally wound in overlapping joint breaking relation to each other and with the edges of the laps of each ply in overlapping relation, said liner plies being adhesively secured together and to the inner chip board ply, and flanged metal end members fitted on said side wall with the flanges of the members being crimped into and forming locking indentations in at least the label and kraft plies of said side wall.

2. In a container for oil and grease, a cylindrical multi-ply side wall comprising a relatively thick outer ply, a plurality of relatively thin inner liner plies of imitation parchment spirally wound in overlapping joint breaking relation to each other and with the edges of the laps of each ply in overlapping relation, the end edges and inner sides of the ends of the multi-ply wall being provided with a sealing coating, and flanged metal end members fitted on said side wall, the flanges of the members being crimped into and forming locking indentations in the outer side of said side wall, said metal end members being provided with a sealing coating cooperating with said wall sealing coating to further lock the end members to the wall.

3. In a container, the combination of a side wall comprising a laminated body consisting of a plurality of plies of fibrous material adhesively secured to each other, the outer ply being of relatively tough kraft board, a label adhesively secured to the outer ply, and a plurality of relatively thin inner plies of imitation parchment

spirally wound in overlapping joint breaking relation to each other and with the laps of each ply in overlapping relation, said liner plies being adhesively secured together and to the inner wall ply, and an end member having a peripheral channel receiving an end of said side wall and with the outer flange of the end member being crimped into and forming a locking indentation in at least the label and outer kraft plies of the said side wall, said end member channel and the end of the wall and a side thereof adjacent the end being provided with plastic sealing material.

4. In a container, the combination of a side wall comprising a laminated body consisting of a plurality of plies of fibrous material adhesively secured to each other, the outer ply being of relatively tough kraft board, a label adhesively secured to the outer ply, and a plurality of relatively thin inner plies of imitation parchment spirally wound in overlapping joint breaking relation to each other and with the laps of each ply in overlapping relation, said liner plies being adhesively secured together and to the inner wall ply, and an end member having a peripheral channel receiving an end of said side wall and with the outer flange of the end member being crimped into and forming a locking indentation in at least the label and outer kraft plies of the said side wall.

5. In a container, a laminated side wall including a ply of kraft board, one or more intermediate filler plies of chip board, and a plurality of inner lining plies formed of relatively thin oil resistant material, and films of adhesive coextensive in area with said plies uniting each ply to an adjacent ply or plies.

6. A container comprising a side wall formed of a plurality of plies of fibrous material adhesively secured together, an end edge of the side wall having a coating of sealing compound thereon lapped upon the inner side of the wall, an end member having a peripheral channel receiving said end edge, the outer edge of said flange member being folded inwardly upon itself, said end member being peripherally crimped into and forming a locking indented engagement with said side wall, and a coating of sealing compound in said channel cooperating with said first named coating to seal the joint between said end member and side wall.

7. In a container for oil and grease, a cylindrical side wall comprising a laminated body consisting of a plurality of plies of spirally wound superimposed chip board adhesively secured to each other, a relatively thick spirally wound outer ply of relatively tough kraft board adhesively secured to said plies of chip board, a label provided with a moisture resistant coating adhesively secured to said kraft board ply, two relatively thin inner liner plies of imitation parchment spirally wound in overlapping joint breaking relation to each other and with the edges of the laps of each ply in overlapping relation, said liner plies being adhesively secured together and to the inner chip board ply, the end edges of the multiply wall being provided with a sealing coating, and flanged metal end members fitted on said side wall with the flanges of the members crimped into and forming locking indentations in at least the label and kraft plies of said side wall.

8. In a container for oil and grease, a cylindrical side wall comprising a laminated body consisting of a plurality of plies of spirally wound superimposed chip board adhesively secured to each other, a relatively thick spirally wound outer ply of relatively tough kraft board adhesively secured to said plies of chip board, a label adhesively secured to said kraft board ply and having a moisture resistant coating, and a plurality of relatively thin inner liner plies of grease proof material spirally wound in overlapping joint breaking relation to each other and with the edges of the laps of each ply in overlapping relation, said liner plies being adhesively secured together and to the inner chip board ply, said chip board plies being approximately .015 inch in thickness, said kraft board being approximately .025 inch in thickness, and said imitation parchment liner being approximately .0025 inch in thickness.

9. In a container for oil and grease, the combination of a side wall comprising a laminated body consisting of a plurality of plies of fibrous material adhesively secured to each other, the outer ply being of relatively tough kraft board, a label adhesively secured to the outer ply, and a plurality of relatively thin inner plies of imitation parchment spirally wound in overlapping joint breaking relation to each other and with the laps of each ply in overlapping relation, said liner plies being adhesively secured together and to the inner wall ply, and an end member having a peripheral channel receiving an end of said side wall and with the outer flanges of the end members being crimped into and forming locking indentations in at least the label and outer kraft plies of the said side wall, said end member channel being provided with plastic joint sealing material.

10. In a container for oil and grease, the combination of a side wall comprising a laminated body consisting of a plurality of plies of fibrous material adhesively secured to each other, the outer ply being of relatively tough kraft board, a label adhesively secured to the outer ply, and a plurality of relatively thin inner plies of imitation parchment spirally wound in overlapping joint breaking relation to each other and with the laps of each ply in overlapping relation, said liner plies being adhesively secured together and to the inner wall ply, the end edges of the multiply walls and the liner plies being provided with sealing coating, and an end member having a peripheral channel receiving an end of said side wall and with the outer flanges of the end members being crimped into and forming locking indentations in at least the label and outer kraft plies of the said side wall.

11. In a container, a laminated side wall comprising a laminated body including a ply of relatively thick kraft material, one or more intermediate filler plies, and lining plies formed of a plurality of strips of relatively thin imitation parchment, said strips being wound in mutually overlapping relation to one another and with the edges of the laps in overlapping relation, the several plies being adhesively secured together, and a coating of sealing compound on the ends of the laminated wall.

ALBERT L. SHERWOOD.
JAMES E. ANNEN.