R. F. THORNDIKE.

DISPLAY BOX.

APPLICATION FILED NOV. 14, 1917.

1,263,819.

Patented Apr. 23, 1918.

Fig. 1.

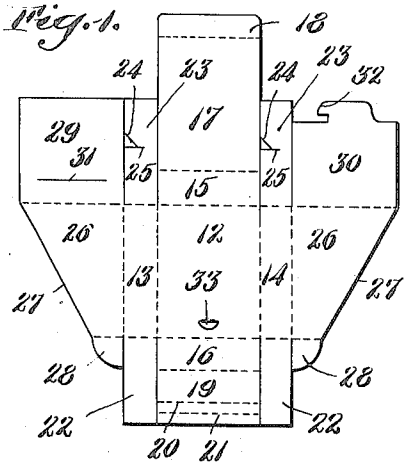


Fig. 2.

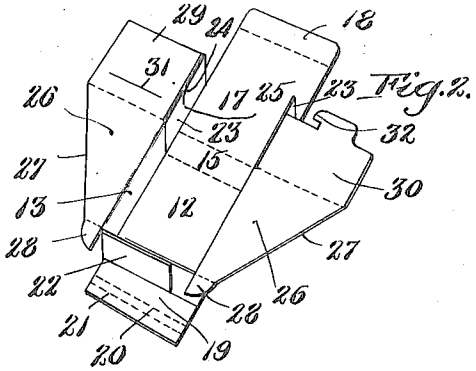


Fig. 3.

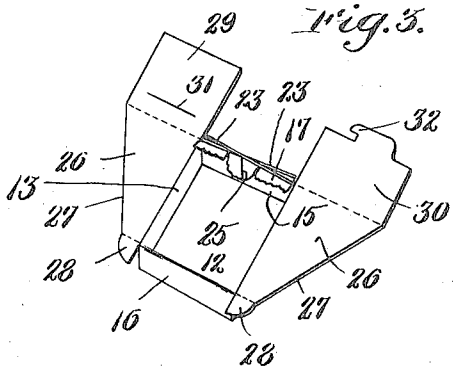


Fig. 4.

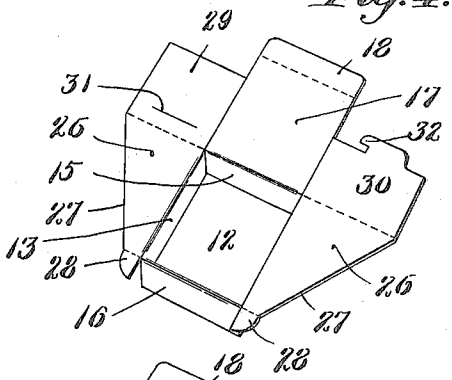


Fig. 5.

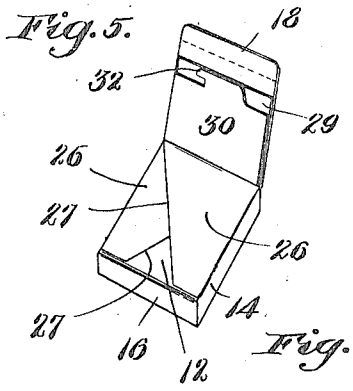


Fig. 6.

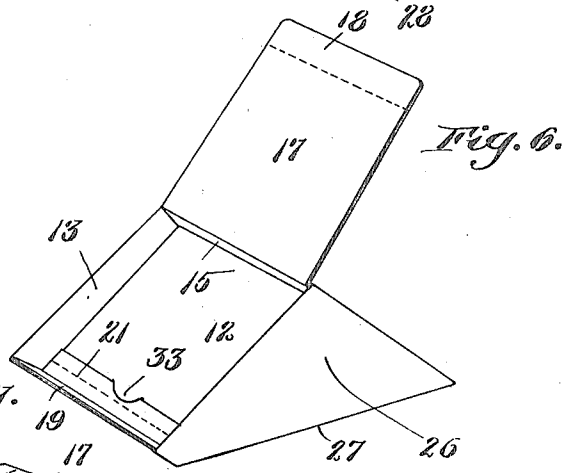


Fig. 7.

Fig. 8.

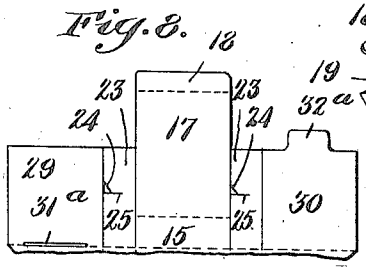


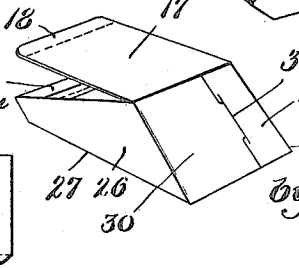


Inventor.

Rothschild F. Thorndike

by W. W. Hanson

Atty.

# UNITED STATES PATENT OFFICE.

ROTHCHILD F. THORNDIKE, OF BOSTON, MASSACHUSETTS.

## DISPLAY-BOX.

1,263,819. Specification of Letters Patent. Patented Apr. 23, 1918.

Application filed November 14, 1917. Serial No. 201,975.

*To all whom it may concern:*

Be it known that I, ROTHCHILD F. THORNDIKE, a citizen of the United States, of Boston, in the county of Suffolk and State of Massachusetts, have invented certain new and useful Improvements in Display-Boxes, of which the following is a specification.

This invention relates to paper boxes of a type which can be shipped in flat or blank form to users and set up to box form by the latter prior to being filled.

The chief object of the invention is to provide boxes of this type in a form possessing attractive display properties, suitable for arranging in or on a show case, or in a window, the box itself having portions which support it with the contents inclined toward customers, forming what may be termed an easel box.

Another object is to provide such boxes with extended areas suitable for ornamentation or advertising purposes.

The invention consists in the improved blank and box substantially as hereinafter described and claimed.

Of the accompanying drawings:

Figure 1 is a plan view of one form of blank embodying my invention.

Figs. 2, 3, 4, 5 and 6 are perspective views illustrating successive steps of folding the blank.

Fig. 7 is a perspective view of the box when set up to the Fig. 6 form, said view being from the rear of the box.

Fig. 8 is a broken way plan view of another form of blank hereinafter described.

Similar reference characters indicate similar parts in all of the views.

Referring first to Fig. 1 the blank of a suitable quality of paper or pasteboard is cut and creased or scored to form a bottom section 12, two side wall sections 13, 14, end wall sections 15, 16 and a cover section 17 extending from the section 15 and having a tucking flap 18. The other end wall section 16 has an integral flap 19 which is transversely creased at 20, 21.

Extending from one end of each of the side wall sections 13, 14, is a tongue 22, and extending from the other end of each of said side wall sections is a tongue 23 having a notch 24 and slitted at 25.

Each of the side wall sections 13, 14, has a wing 26 the outer edge of which is inclined as at 27, the narrow end of each wing 26 having a tongue 28.

Extending from the wide ends of the wings 26 are flaps 29, 30, the flap 29 having a slit 31 and the flap 30 having a tongue 32.

The bottom section 12, near the crease which forms the hinge for the end wall sections 16, has a curved slit to provide a tongue 33.

The blanks may be shipped to the users in the flat form illustrated in Fig. 1, said users folding the blanks to receptacle form in the following manner:

First the side wall sections 13, 14, are turned to upright position as indicated in Fig. 2, and the two tongues 22 are turned inward and caused to overlap. Next, the end wall section 16, is folded up against the outer surfaces of the overlapped tongues 22, and the flap 19 is carried inside until the edge thereof snaps under the tongue 33 which thus locks the parts in the position shown in Fig. 3. The double creases 20, 21 of the flap 19 are to facilitate the engagement of the edge of the flap with said locking tongue 33. In Fig. 3 the cover section 17 is removed to illustrate how the tongues 23 are brought together and overlapped and notches 24 and slits 25 interlocked. After the interlocking of the tongues 23, and while the cover section 17 is open as in Fig. 4, the box is in receptacle form, ready to be filled as by a confectioner. After such filling the wings 26 are overlapped as indicated in Fig. 5, the tongues 28 having been first turned in so as to pass down inside of the end wall 16. This folding brings the parts 30, 29 and 17 into a superposed relationship as shown in said Fig. 5, after which said superposed parts are adapted to be folded down and the flap 18 tucked inside of the wall 16. This puts the box with its contents in condition to be put on a shelf or to be shipped filled.

When it is desired to put the box on exhibition to cause a display of the goods in the receptacle portion, the portions shown in Fig. 5 as superposed are opened and the wings 26 are turned out and down outside of the side wall sections 13, 14. During this turning movement the tongues 28 are slipped in behind the section 16, between said section and the tongues 22. Then the flap 30 (see Fig. 7) is overlapped upon the flap 29, and the tongue 32 is engaged with slit 31.

This interlocks the parts in the position indicated in Figs. 6 and 7, the cover section 17 being left either open or closed. Usually the box will be on display with the lid or cover turned back as shown in Fig. 6, but said cover can be readily folded down when the goods are not to be on display, such as when the store is closed.

The wide wings 26 provide extended areas for advertising and ornamental purposes, in addition to the cover section.

Fig. 8 illustrates a portion of a blank substantially the same as that in Fig. 1 excepting that the slit $31^a$ is differently located from the slit 31 in Fig. 1, and the tongue $32^a$ is of a slightly different form as compared with the tongue 32 in Fig. 1.

I do not limit myself to the specific relative shapes or sizes of the different portions of the boxes, nor to the specific means for interlocking the tongues or flaps which are overlapped. Nor do I limit myself to so forming the blank and its easel-supporting wings that the said wings will fold close against the outer surface of the side wall sections. By a slight change in the shapes of the flaps 29, 30, they are made to interlock while holding the wings 26 spreading or flaring downwardly.

The boxes or blanks may be made in any size and of any proportions. It is to be understood that the term "side" and "end" are employed only for convenience of description and are not to be understood as limitations meaning that the box is either square or elongated, or if elongated which dimension is the greatest.

Having now described my invention, I claim:

1. A box comprising a single blank having a bottom section and four un-cut or continuous wall sections, two of the latter having integral wings with inclined outer edges, said wings being adapted to be folded over the top of the box or to outer upright position to support the box in inclined position, the blanks also having interlocking members independent of the side wall sections to hold the box in set up condition.

2. A box blank comprising a sheet cut and creased to form a bottom section, continuous un-cut wall sections, wings extending from and wider than two of said wall sections, a cover section, and interengaging members adapted to hold the different sections in relative positions to form a receptacle with the wings extending below the plane of the bottom of the receptacle, the free edges of said wings being at an angle relatively to the edges of the wall sections.

In testimony whereof I have affixed my signature.

ROTHCHILD F. THORNDIKE.