Feb. 13, 1945. W. R. SPAULDING 2,369,376

FLASHER SYSTEM

Filed Dec. 4, 1941

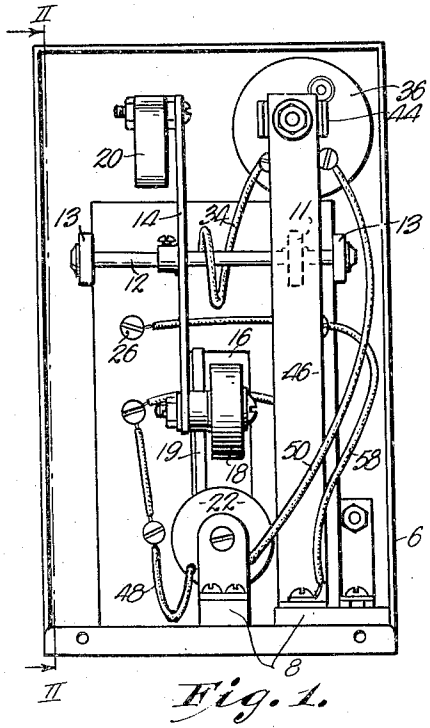

Fig. 1.

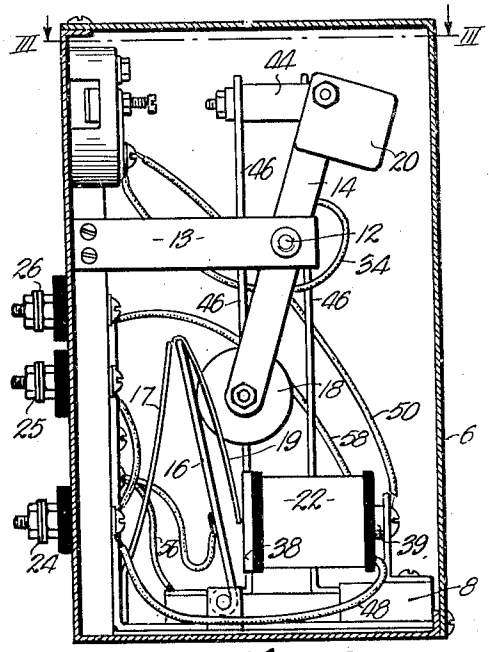

Fig. 2.

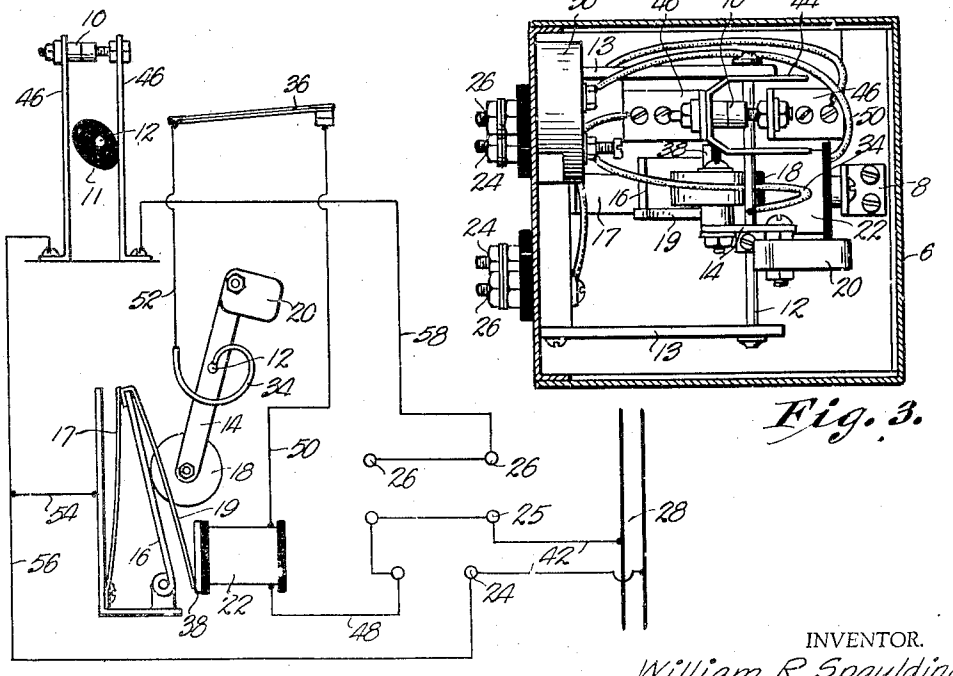

Fig. 4.

Fig. 3.

INVENTOR.
William R. Spaulding
BY
ATTORNEY.

Patented Feb. 13, 1945 2,369,376

UNITED STATES PATENT OFFICE

2,369,376

FLASHER SYSTEM

William Russell Spaulding, Kansas City, Mo.

Application December 4, 1941, Serial No. 421,690

1 Claim. (Cl. 200—90)

This invention relates to electric lighting systems wherein a gaseous tube is employed and the primary object is the provision of means in the circuit of said system for converting a steady or continuous flow of current from a source of supply into an intermittent or periodic flow, so a flashing effect is imparted to the gaseous tube.

One of the important aims of this invention is the provision of a specially formed electro-magnetically operated means for actuating a cam, having contacts on either side thereof, and thereby interrupting any circuit with which the contacts are associated.

An additional object of this invention is the provision of a specially formed electro-magnetically operated means for actuating a pendulum that swings on a shaft carrying the cam; this said means has an armature in electrical contact with a counter-balanced pendulum in such a way that the circuit energizing the electro-magnet is broken by the swing to and from the armature by the pendulum. Thus, the flasher embodies a control for interrupting the current through the flasher, and at the same time, provides a unique means for interrupting a still heavier flow of current required by the gaseous tube apparatus with which the flasher is associated.

The specific form of the electro-magnetically operated converting means is important and forms some of the major objects of this invention—such objects will appear during the course of the following specification, referring to the accompanying drawing wherein:

Fig. 1 is a rear elevational view of the flasher with the cover removed.

Fig. 2 is a cross sectional view of the flasher taken on line II—II of Fig. 1.

Fig. 3 is a horizontal cross sectional view taken on lines III—III of Fig. 2; and

Fig. 4 is a schematic view illustrating the electrical circuit and its relation to parts of the flasher.

The flasher is generally associated with a gaseous tube and its apparatus, not shown in the drawing, and is contained in a case 6, being mounted therein on insulating base 6.

The flasher is provided with a set of heavy contacts 10 which open and close the circuit of the apparatus with which they are associated. These contacts 10 are opened and closed by the action of cam 11, mounted on a rotatable shaft 12.

Counter-balanced pendulum 14, affixed to rotatable shaft 12, is secured in a vertical position whereby its lower end, comprising a weight 18, is in electrical contact with armature 16. Pendulum 14 is provided with a counter-weight 20, whose position may be shifted to vary the period of said pendulum. Rotatable shaft 12 is positioned by support 13. Armature 16 is energized by electro-magnet 22 when electric current flows therethrough. This armature 16 has a spring stop 17 and a spring 19 for assisting in the return of said armature 16 to its normal position against stop 17.

Electro-magnet 22 has a copper disc 38 surrounding one end of its pole piece 39, for the purpose of eliminating chatter when the device is supplied with alternating current.

Contacts 10 are secured in position on either side of insulated cam 11 by supports 46, and accidental displacement of the contacts is prevented by guards 44.

A thermostatic circuit breaker 36 is included in the circuit so that current flowing therethrough is entirely stopped from time-to-time.

Current for the electro-magnetic flasher is obtained from line 28 by means of conductors 42, secured to terminal 24 and terminal 25 respectively—the latter terminal being provided with a number of taps whereby the same may be employed as a common terminal when the flasher is associated with other pieces of apparatus.

Terminal 25 is connected with one side of electro-magnet 22 by means of wire 48, which supplies current thereto. The other side of electro-magnet 22 is connected with a wire 50 which permits current to pass to thermostatic flasher 36 that is normally closed. The other terminal of flasher 36 is secured by means of wire 52 to pig-tail 34—the latter being attached to shaft 12 whereby current will flow to pendulum 14. In its normal position pendulum 14 will be in electrical contact with armature 16 and current will flow therefrom by means of wires 54 to 56 to input terminal 24.

Thus, it is readily seen that the action of current flowing through the aforementioned circuit, is such as will energize electro-magnet 22—this will attract armature 16 which will displace pendulum 14 along the normal path of its swing. As the pendulum is swung outwardly, breaking contact with the armature, the current flowing through the electro-magnet will be interrupted andt he armature will fall back against spring stop 17, and in so doing, will be assisted by the action of spring 19. The pendulum will later return to its normal position and again contact armature 16, whereby the said cycle of operation will be repeated.

During the cycle of operation, shaft 12 will be

rotated together with cam 11. This cam will function to open contacts 10. These contacts and their supports 46 are provided with wires 56 and 58 respectively, whereby current may flow from terminal 24 through the contacts when they are closed, and be conveyed by means of wires 56 and 58 to terminal 26. This terminal 26 also has a plurality of taps so that the flasher may be connected to several pieces of apparatus. Contacts, as can be seen, interrupt only one side of the electrical circuit supplying said apparatus; the other side of said electrical circuit is secured to the apparatus to be operated by attachment with terminal 25.

Having thus described the invention, what is claimed as new and desired to be secured by Letters Patent is:

An electro-magnetic flasher for electrical circuits comprising an electro-magnet having a coil, one end thereof being connected to one terminal of a source of electric current; a vertically disposed armature in electrical connection with the other terminal of said source of electric current and hinged at its lower end to permit the upper free end thereof to move toward and from the electro-magnet; a spring blade fixed to the upper end of the armature and having its lower free end bearing against the electro-magnet; a resilient stop for said armature when moving in a direction away from the electro-magnet; a vertically disposed counterbalanced pendulum positioned with its lower end normally in electrical contact with the said armature and having another part thereof connected to the other end of said coil, said pendulum being swung outwardly by the armature when the same is energized whereby to momentarily break the said electrical contact; a horizontal rotatable shaft for supporting the pendulum affixed near the center thereof; a cam at one end of said shaft; and contact elements arranged on either side of the cam and insulated therefrom, said contact elements being normally closed and separated by rotation of the said cam.

WILLIAM RUSSELL SPAULDING.