June 5, 1962 V. ABOLINS 3,037,885

METHOD OF INSULATING AN ELECTRICAL COIL

Filed Dec. 27, 1960

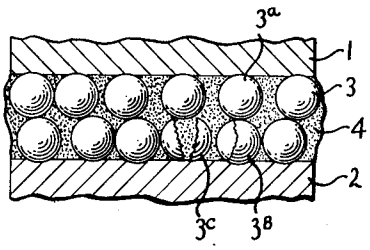

FIG. 1

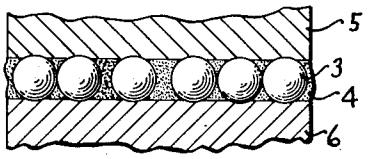

FIG. 2b

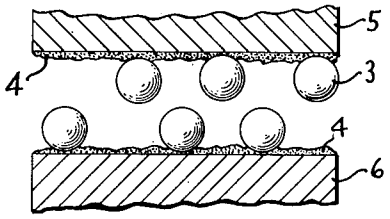

FIG. 2a

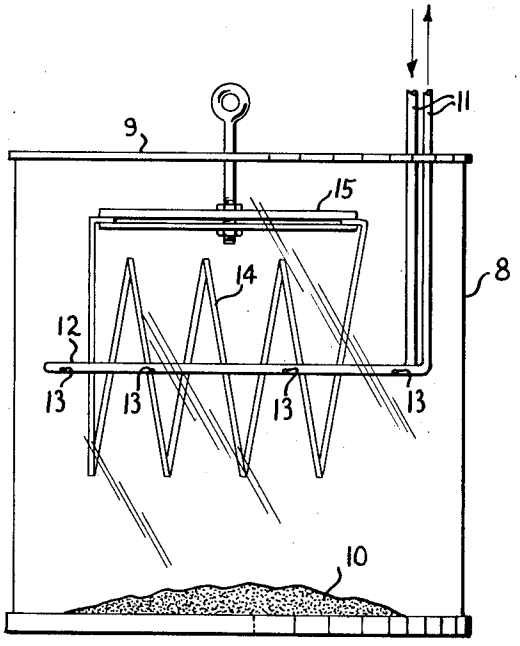

FIG. 3

INVENTOR.
VISVALDIS ABOLINS
BY Vernon A. Kalb
ATTORNEY

United States Patent Office 3,037,885 Patented June 5, 1962

3,037,885
METHOD OF INSULATING AN ELECTRICAL COIL

Visvaldis Abolins, Erie, Pa., assignor to General Electric Company, a corporation of New York

Filed Dec. 27, 1960, Ser. No. 79,945
6 Claims. (Cl. 117—232)

This invention relates to a method of insulating parallel conductors, and more particularly relates to a method of providing positive spacing between parallel conductors. This application is a continuation in part of my copending application, Serial No. 854,312, now abandoned.

The practice has recently been developed of spacing parallel conductors by providing vitreous beads of uniform diameter between the surfaces of the parallel conductors. This spacing arrangement is particularly advantageous in edge-wound coils to provide positive spacing between adjacent turns.

Although the practice of spacing parallel conductors by use of vitreous beads of uniform diameter provides positive, uniform spacing of adjacent parallel conductors, no really efficient and inexpensive method has heretofore been devised for initially applying the vitreous beads to the conductor surfaces to obtain the proper distribution and concentration of beads on adjacent conductor surfaces. To apply the beads to the conductor surfaces, an adhesive must be provided to hold the beads on the surfaces until the conductors are so positioned that each bead contacts a surface of each conductor. It is highly desirable that upon final spacing of the conductors a spacing monolayer of vitreous beads of uniform diameter contact each surface to provide uniform spacing of the conductor surfaces throughout their areas of proximity. It is then readily apparent that no more than 50 percent of each surface should be covered with vitreous beads in order to obtain a monolayer of spacing beads which present a uniform spacing layer.

Various methods of applying vitreous beads to surfaces of electrical coils have been utilized, including spraying or dusting the beads onto the surfaces of the coil turns which have been coated with a tacky bonding substance, and dipping a conductor in varnish in which vitreous beads are suspended. The aforementioned methods of applying vitreous beads to conductor surfaces all present one common problem, that is, there is no control of the concentration of the vitreous beads on the conductor surface. If the vitreous beads should be sprayed or dusted onto the conductor surface, the vitreous beads concentrate in some areas, making it difficult, if not impossible, to obtain uniform distribution at a predetermined percentage of surface coverage. When the vitreous beads are suspended in varnish with the intent of dipping the conductor into the varnish, it has been found that the vitreous beads will settle, leaving very few beads in suspension. Furthermore, when the conductor is removed from the varnish pot, varnish will run off, carrying beads with it.

In applying vitreous beads to a conductor surface, to provide uniform spacing between parallel conductors, where both conductors have beads applied, it is necessary to control not only the distribution of the beads, but to control the percentage coverage of the surfaces of the conductors by the vitreous beads. In the case of an edge-wound coil, if the percentage coverage of adjacent surfaces exceeds 50 percent, when the coil is compressed high pressure points will exist between beads sitting on top of other beads, which will crush some beads. This produces spacers of non-uniform dimension which prevents positive and uniform spacing of parallel coil turns.

In view of the limitations and deficiencies of known methods of applying layers of vitreous beads to a conductor surface in controlled concentration, it is an object

of my invention to provide a process for applying vitreous beads to a conductor surface in which the percentage of the surface of the conductor which is covered by the vitreous beads may readily be controlled or determined.

Another object of my invention is the provision of a process for applying vitreous beads to the surfaces of an electric edge-wound coil to provide a monolayer of spacing beads between adjacent coil surfaces.

It is a further object of my invention to provide a method for positively spacing adjacent turns of a coil constructed from a conductor of rectangular cross-section.

It is a still further object of my invention to provide a simple, inexpensive method of applying vitreous beads of uniform diameter to the surface of an electrical conductor.

In accomplishing these and other objects of my invention, in one form thereof, I provide a container into which spherical vitreous beads of uniform diameter are placed. A coil coated with an adhesive substance is suspended in the container and compressed air is introduced into the container through jets, agitating the vitreous beads into a turbulent cloud. The number of vitreous beads adhering to the coil surfaces may be controlled by the time of agitation, the number of beads in the container, the velocity of the compressed air introduced into the container, the volume of air introduced, and the positioning of the air inlet with respect to the beads, or any combination of the above. The percentage coverage of the surfaces by the vitreous beads is usually held to approximately 40 percent. Due to the turbulence of the cloud of beads and random movement of the beads, there is substantially no localized areas of heavy concentration of beads. After a predetermined period of being subjected to the turbulent cloud of beads, the coil is removed from the container and compressed, the beads between adjacent surfaces of the coil turns providing positive spacing between turns.

The novel features of my invention are particularly pointed out in the appended claims. The invention itself, however, both as to its organization and method of operation, together with further objects and advantages thereof, may best be understood by referring to the following description when taken in connection with the following drawings wherein:

FIGURE 1 is a sectional view of conductors wherein the percentage coverage of conductor surfaces by vitreous beads is not controlled;

FIGURE 2A illustrates a sectional view of adjacent conductors which have been coated with vitreous beads in accordance with my invention;

FIGURE 2B illustrates a sectional view of conductors spaced by a monolayer of vitreous beads;

FIGURE 3 illustrates an apparatus utilized in practicing my invention.

Referring now to FIG. 1, I show flat-surfaced conductors **1** and **2**, which are spaced by vitreous beads **3** held between the surfaces by an adhesive material **4** wherein the beads **3** have been applied to the surfaces of conductors **1** and **2** in uncontrolled concentration. Upon solidifying the conductors **1** and **2**, the configuration and location of the beads is such that high pressure points exist between individual beads, such as bead **3***a* sitting on top of bead **3***b*. This system is not stable in compression, inasmuch as the beads adhering to conductor **1** may slide with respect to beads adhering to conductor **2**, or beads may be crushed or split in compressing the coil, as bead **3***c*, for example, thereby negating any opportunity for providing positive predetermined spacing between conductors **1** and **2**.

Reference is now made to FIG. 2A wherein I illustrate parallel conductors **5** and **6** having adjacent surfaces to which a controlled concentration and distribution of vitreous beads **3** have been applied. Upon compression of conductors **5** and **6** into predetermined spaced rela-

tionship, determined by the diameter of the vitreous beads **3**, a monolayer of spherical beads is obtained between the conductors **5** and **6**. Inasmuch as the beads are of uniform diameter, the conductors **5** and **6** are spaced apart a distance substantially equal to the diameter of the beads (see FIG. 2B). If upon movement of the conductors **5** and **6** toward each other a bead on conductor **5** should contact a bead on conductor **6** before the predetermined spacing is reached, one or both of the beads will be moved relative to the other due to the spherical configuration of the beads and the vector force which each bead exerts on the other. When the percentage coverage of the conductor surfaces by the vitreous beads is controlled to less than 50 percent, this movement of the beads is obtainable. However, should the percentage coverage of the surfaces exceed 50 percent, it may readily be seen that free, slideable movement of beads is not possible and a uniform monolayer of beads between conductors cannot be obtained. It is further desirable that sufficient resin be included between conductors **5** and **6** to obtain a void-free bond between conductors.

Reference is now made to FIG. 3 wherein I illustrate apparatus for practicing my invention. A container **8** is provided having a removable top cover **9**. A quantity **10** of vitreous beads of predetermined uniform diameter is placed within the container. A compressed air supply line **11** having a generally horizontal portion **12** containing a plurality of air outlets **13** adapted to direct jets of air toward the quantity of beads, is mounted within the container **8**. An expanded edge-wound coil **14** is suspended within the container by any suitable means such as hanger **15**. The coil **14** may be coated with a resin to provide an adhesive surface to which the beads may adhere prior to insertion into container **8**. The portion **12** of the compressed air supply line is adjustable in height above the container bottom so that the distance between the air outlets and the vitreous beads on the floor of the container may be varied. When the coil is introduced into the container, and the container has been closed, compressed air is applied to line **11**, and openings **13** direct jets of air on the mass **10** of beads, agitating the vitreous beads into a turbulent cloud. The vitreous beads in the turbulent cloud strike the tacky coating on the coil and adhere thereto. After a predetermined time, the compressed air supply is cut off. The coil is then removed from the container **8** and placed in a clamping fixture, not shown, and subjected to heat and to pressure along the axis of the coil to solidify the coil. When the coil is compressed in the clamping fixture, the monolayer of vitreous beads provides positive and uniform spacing between turns. When vitreous beads are applied to a coil to provide uniform turn-to-turn spacing, it is often desirable upon solidifying the coil to apply sufficient force to indent the beads in the surfaces of the coil to interlock adjacent turns, as shown in FIG. 2B.

In practicing my invention in providing spacing beads on adjacent surfaces of turns of an electrical coil, it is apparent that some beads will adhere to the edges of the coil turns. These beads adhering to the edges of the coil turns normally present no problem, inasmuch as the beads may have a diameter on the order of .012 inch. However, if it is desired, the beads on the sides of the conductors may be removed by scraping or wiping with a rag soaked in a suitable solvent. The adhesive material utilized to cause the vitreous beads to adhere to the surfaces of the electrical conductors is preferably a thermosetting resin, or a thermoplastic resin of suitably high melting point. These resins may be applied to a conductor such as coil **14** in a variety of ways. The coils may be dipped in a liquid resin and then inserted in the container **8**. Also, a semi-solid resin may be applied to a pre-heated coil to reduce the viscosity of the resin, and thereby present a tacky surface to which the beads may adhere. After the beads are applied and the resin and coil cools to room temperature, the resin solidifies. Another preferred manner of applying resin to a conductor is by adding a solvent to a semi-solid resin to reduce the viscosity of the resin and thereby increase tackiness of the resin, and spraying the resin-solvent mixture on the coil. After the beads are applied, the coil is then air-dried to allow the solvent to evaporate before solidifying the coil.

A resin which I prefer to use when applying resin by dipping and using .010" diameter beads has the following formulation:

	P.b.w.
Natural shellac	100
Araldite No. 7071 epoxy (Ciba Co.)	100
Toluene	150
Alcohol	150

I have found that this formulation having a viscosity of 18 centipoises, provides an adhesive with thixotropic characteristic to provide sufficient adhesive thickness after dipping, has good wetting properties on copper, and maintains good bonding strength with age. An ester, natural shellac, is utilized as the hardening agent to minimize the problem of dermatitis. The alcohol is a solvent for dissolving shellac and the toluene is a solvent for dissolving the resin.

Other compositions may be formulated to have the desired characteristics and the foregoing formulation is given by way of example only. I prefer to provide an adhesive buildup on the conductor surfaces approximating ¼ to ⅓ of the diameter of the beads used when a 40 to 50 percent surface coverage is provided on each facing conductor surface. In the aforementioned illustrative adhesive composition, the viscosity may be regulated by increasing or decreasing the solvents therein to determine the thickness of adhesive on the conductor when removed from the dipping container. Sufficient adhesive should be provided on tne conductor surfaces to provide an essentially void-free bond, after any solvent in the adhesive is evaporated, when the conductor surfaces are spaced by the beads.

By way of illustration only, I give below data on equipment used and conditions under which a 15-turn coil, 22 inches in length, formed of 0.345" x 1.0" copper had a 40 percent coverage of 0.012" diameter vitreous beads applied:

Height of container	inches	33
Diameter of container	do	23½
Distance of air outlets to beads	do	18
Number of air outlets		6
Diameter of air outlet pipe (00)	inches	½
Diameter of air outlets	do	3/32
Air pressure	lbs	70
Exposure of time	secs	7
Amount of vitreous beads in containers	qt	1

In other applications, I have varied the above parameters and achieved satisfactory results. Bead sizes of 0.006" to 0.012" have been utilized with various coils, and the bead size utilized will, of course, depend on the spacing desired between coils.

In another modification of my invention, a mixture of thermosetting resin powder and vitreous beads may be introduced into the container. The conductor to which beads are to be applied is preheated and placed in the applicator without an adhesive coating. When the bead-resin powder mixture is agitated into a turbulent cloud, the resin powder strikes the heated conductor and provides a tacky surface to which the vitreous beads will adhere. In this modification of my invention a problem may be presented by the difference in particle size and mass of the beads and resin powder particles. The resin powder will be agitated into a turbulent cloud at a lower value of applied air pressure than will be the vitreous beads, thereby causing an excess of resin on the conductor. This problem may be alleviated by controlling the ratio of resin powder and vitreous beads introduced in the container **8**. Another solution to this apparent problem

is to first form a turbulent cloud of resin powder which melts upon striking the heated surface of the coil, by causing agitation of the resin powder by air at one pressure, and subsequently agitating the vitreous beads and resin simultaneously for a shorter period at a higher pressure. In this way control of deposition of beads and resin may be achieved.

Another modification of my invention makes use of two cloud chambers, one for resin powder and another one vitreous beads. A heated coil is coated with resin in one chamber and then transferred to the second chamber where vitreous beads are applied. This modification of my invention yielded very good results due to the ease of individually controlling the amount of resin and beads deposited.

In still another modification of my invention, the vitreous beads may be pre-coated with a thermosetting resin prior to being placed in the container **8**. When a pre-heated coil is introduced into the container and the resin-coated beads agitated, the resin will melt upon contacting the heated coil surfaces, causing the beads to adhere to the coil surface. Although resin may melt and adhere to a coil surface only in a localized area of a vitreous bead, no problem is presented inasmuch as when the coil is placed in the clamping fixture and solidified under pressure and heat, the remainder of the resin on the beads melts and the vitreous beads contact adjacent coil surfaces to provide turn-to-turn spacing. If this modification of my invention is to be used, it is important that the beads be coated with sufficient resin to achieve good bonding between coil turns. The optimum is sufficient resin to fill all space between the facing surfaces of adjacent coil turns.

While I have illustrated and described preferred and modified processes of this invention, modifications to the basic process may occur to those skilled in the art without departing from the spirit and scope of this invention. Accordingly, it is my intention to cover all changes and modifications of the examples of the invention herein chosen for purposes of disclosure which do not constitute departure from the spirit and scope of the invention.

What I claim as new and desire to secure by Letters Patent of the United States is:

1. The method of providing a predetermined spacing between turns of an electrical coil formed from a conductor of rectangular cross-section comprising placing vitreous beads of predetermined uniform diameter in a container, suspending an axially expanded coil having an adhesive coating thereon in the container above the beads, subjecting the beads to jets of air to agitate the beads into a turbulent cloud about the coil until a predetermined percentage of the surfaces of the coil are covered by the beads, removing the coil from the container and axially compressing the coil until adjacent coil turns are spaced a distance substantially equal to the diameter of the beads.

2. The method of providing a predetermined spacing between turns of an electrical coil formed from a conductor of rectangular cross-section comprising placing vitreous beads of predetermined uniform diameter in a container, suspending an axially expanded coil having an adhesive coating thereon in the container above the beads, agitating the beads into a turbulent cloud about the coil by subjecting the beads to jets of air originating a predetermined height above the floor of the container for a predetermined time whereby a predetermined percentage of the surfaces of the coil are covered by the beads, removing the coil from the container and axially compressing the coil until adjacent coil turns are spaced a distance substantially equal to the diameter of the beads.

3. The method of providing a predetermined spacing between turns of an electrical coil formed from a conductor of rectangular cross-section comprising placing vitreous beads of predetermined uniform diameter in a container, suspending an axially expanded coil having an adhesive coating thereon in the container above the beads, subjecting the beads to jets of air to agitate the beads into a turbulent cloud about the coil whereby beads striking the coil surface adhere thereto, discontinuing agitation of the beads after a predetermined time, removing the coil from the container and axially compressing the coil until adjacent coil turns are spaced a distance substantially equal to the diameter of the beads.

4. The method of providing a predetermined spacing between turns of an electrical coil formed from a conductor of rectangular cross-section comprising the steps of placing vitreous beads in a container, axially expanding the coil, providing an adhesive coating on the coil, suspending the coil in the container above the beads, agitating the beads into a turbulent cloud about the coil by subjecting the beads to jets of air until a predetermined percentage of the surfaces of the coil are covered by the beads, removing the coil from the container and axially compressing the coil until adjacent coil turns are spaced a distance substantially equal to the diameter of the beads.

5. The method of providing a predetermined spacing between turns of an electrical coil formed from a conductor of rectangular cross-section comprising the steps of placing vitreous beads coated with a resin in a container, suspending an axially expanded coil heated to a predetermined temperature in the container, agitating the beads into a turbulent cloud about the coil by subjecting the beads to jets of air whereby the resin-coated beads adhere to the surfaces of the heated coil upon contact, discontinuing agitation of the beads after a predetermined time, removing the coil from the container and axially compressing the coil until adjacent coil turns are spaced a distance substantially equal to the diameter of the beads.

6. The method of providing a predetermined spacing between turns of an electrical coil formed from a conductor of rectangular cross-section comprising the steps of placing vitreous beads in a container, axially expanding the coil, providing an adhesive coating on the coil, suspending the coil in the container above the beads, agitating the beads into a turbulent cloud about the coil until a predetermined percentage of the surfaces of the coil are covered by the beads, removing the coil from the container and axially compressing the coil until adjacent coil turns are spaced a distance substantially equal to the diameter of the beads.

References Cited in the file of this patent

UNITED STATES PATENTS

58,217	Clark	Sept. 25, 1866
536,857	Dion	Apr. 2, 1895
764,810	Jefferson	July 12, 1904
781,025	Rupley	Jan. 31, 1905
1,200,041	Speed	Oct. 3, 1916
2,440,584	Heltzer et al.	Apr. 27, 1948
2,443,663	Rider et al.	June 22, 1948
2,730,841	Seaught	Jan. 17, 1956
2,907,299	Weiner	Oct. 6, 1959

FOREIGN PATENTS

569,792	Germany	Feb. 8, 1933