Jan. 15, 1963 J. H. MacNEILL ET AL 3,073,897

CODE CONVERTER

Filed Nov. 21, 1960 6 Sheets-Sheet 1

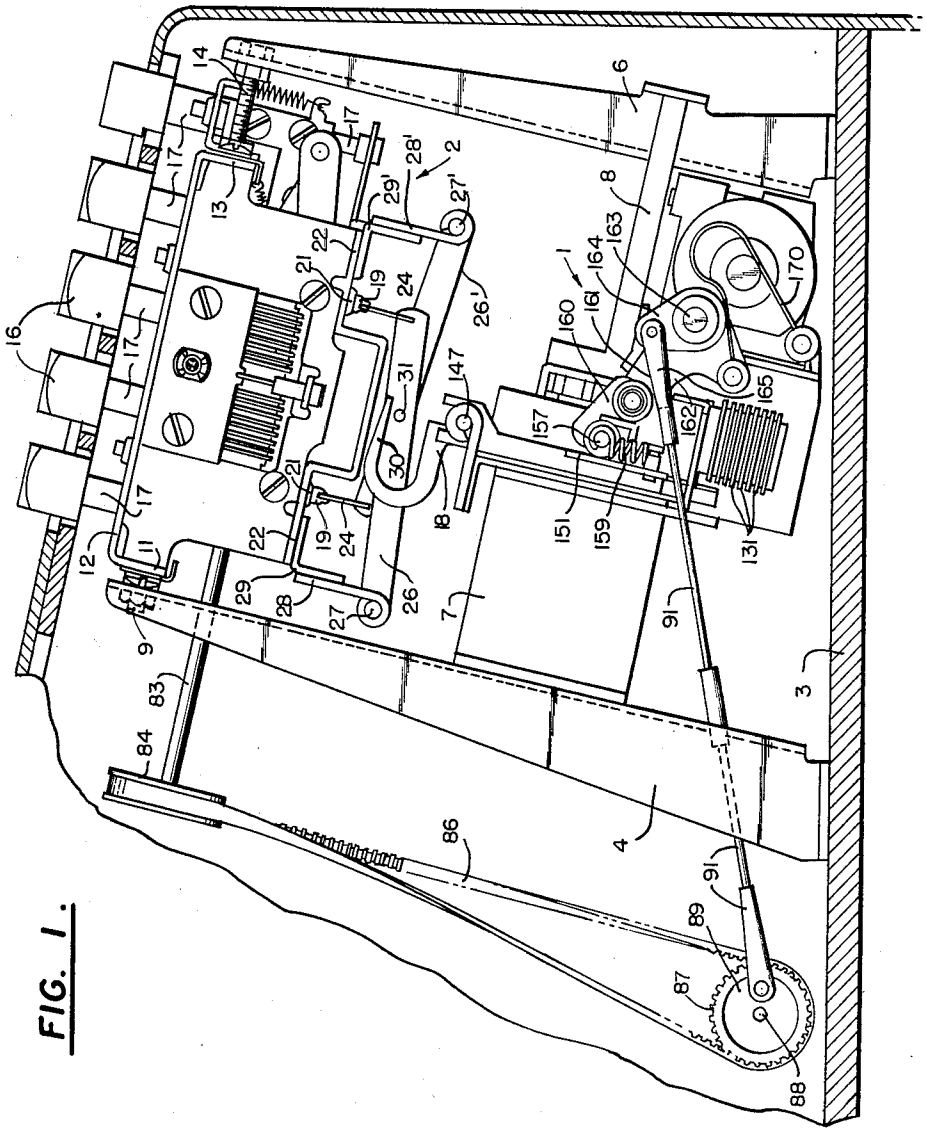

FIG. 1.

INVENTORS
John H. MacNeill
Rolph B. White, Jr.
Thomas G. Holmes
James E. Bellinger, Jr.
Charles F. West

BY Hurwitz & Rose
ATTORNEYS

Jan. 15, 1963 J. H. MacNEILL ET AL 3,073,897

CODE CONVERTER

Filed Nov. 21, 1960 6 Sheets-Sheet 2

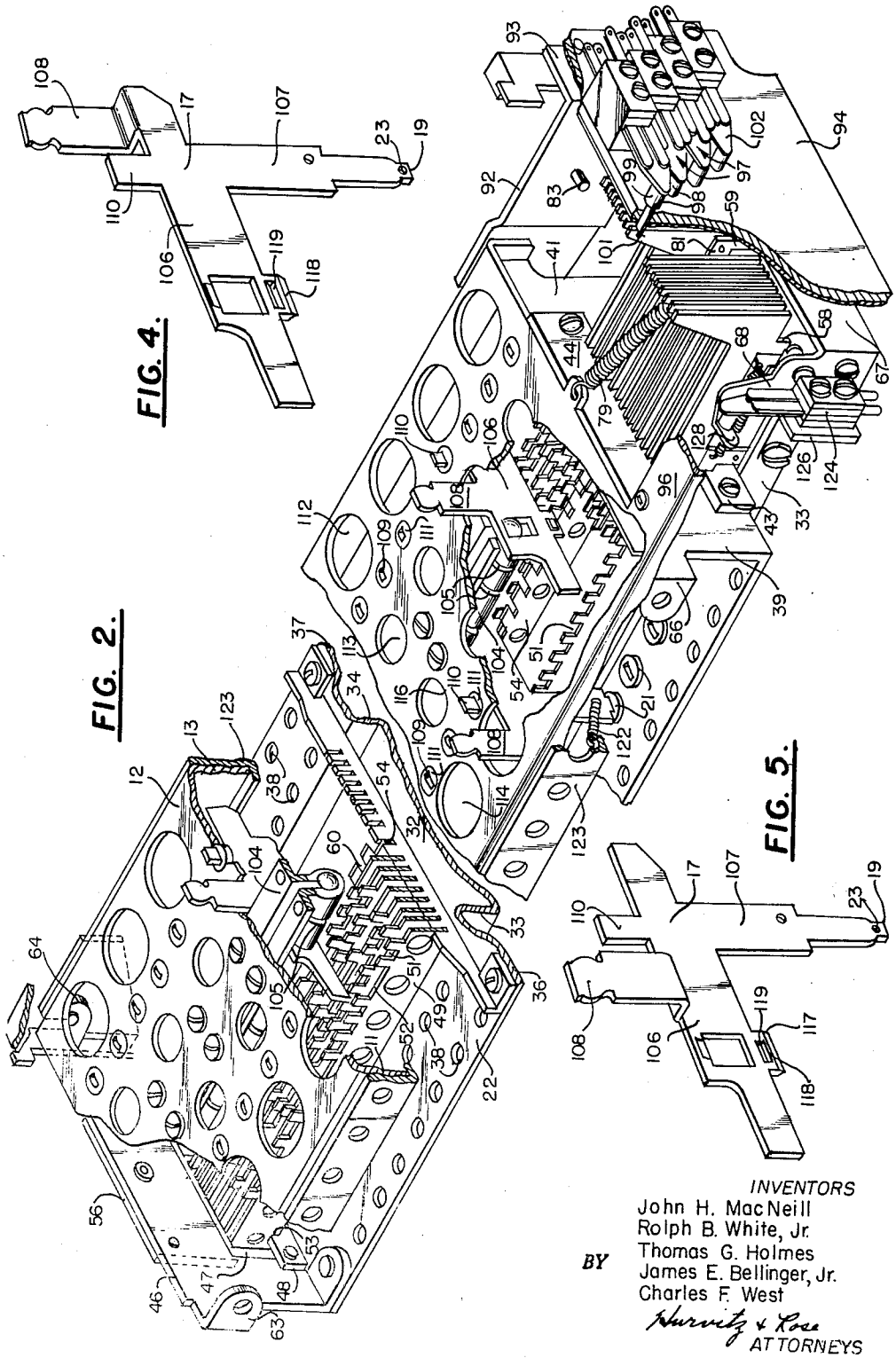

FIG. 2.

FIG. 4.

FIG. 5.

INVENTORS
John H. MacNeill
Rolph B. White, Jr.
Thomas G. Holmes
James E. Bellinger, Jr.
Charles F. West

BY Hurwitz & Rose
ATTORNEYS

Jan. 15, 1963 J. H. MacNEILL ET AL 3,073,897

CODE CONVERTER

Filed Nov. 21, 1960 6 Sheets-Sheet 3

FIG. 3.

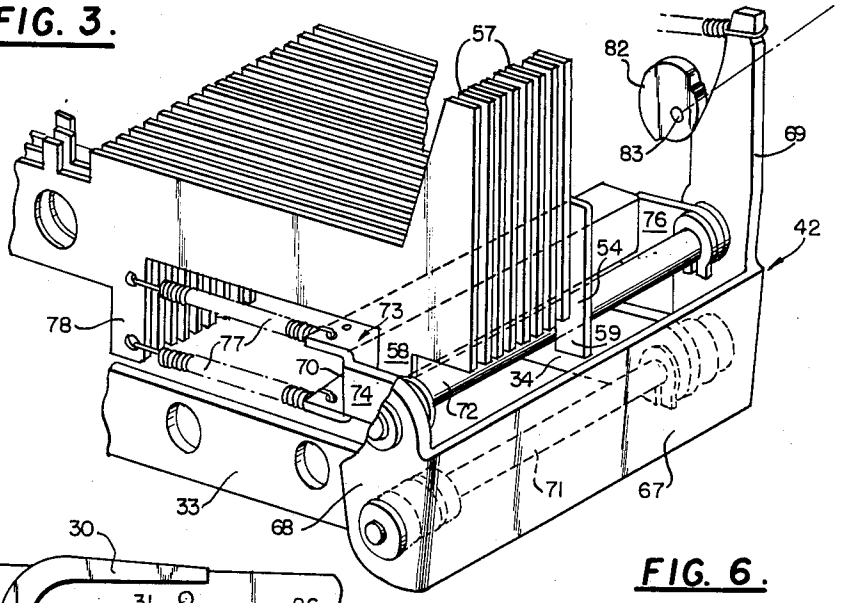

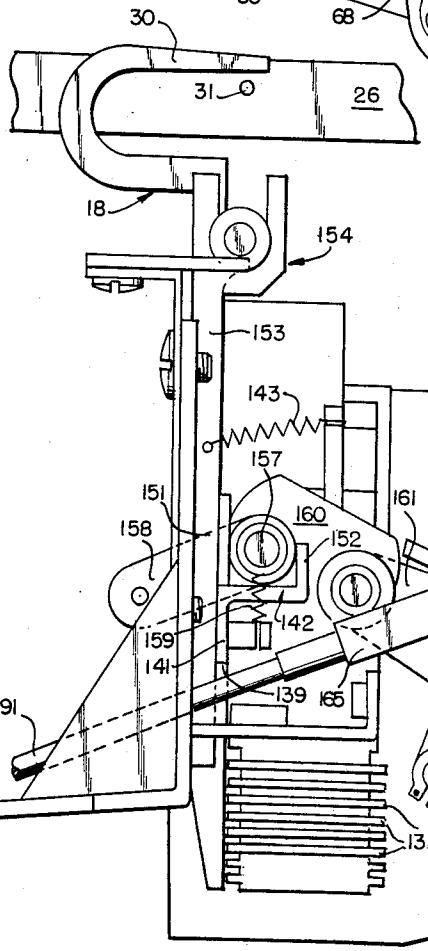

FIG. 6.

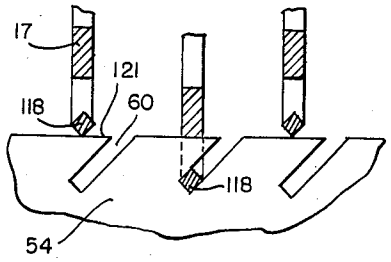

FIG. 7.

INVENTORS
John H. MacNeill
Rolph B. White, Jr.
Thomas G. Holmes
James E. Bellinger, Jr.
Charles F. West

BY Hurwitz & Rose
ATTORNEYS

Jan. 15, 1963 J. H. MacNEILL ET AL 3,073,897

CODE CONVERTER

Filed Nov. 21, 1960 6 Sheets-Sheet 4

FIG. 9.

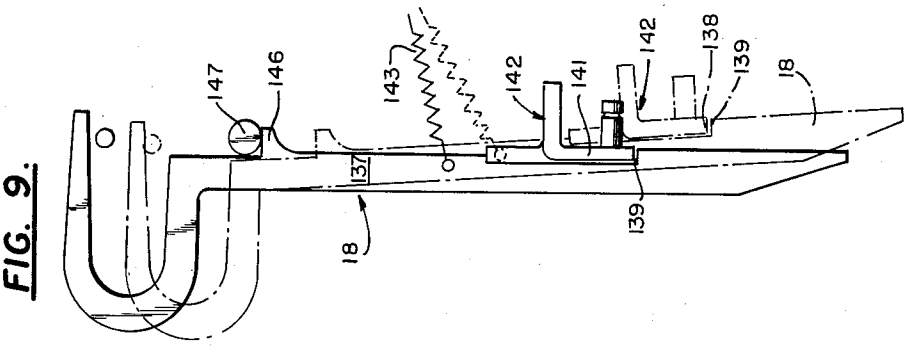

FIG. 8.

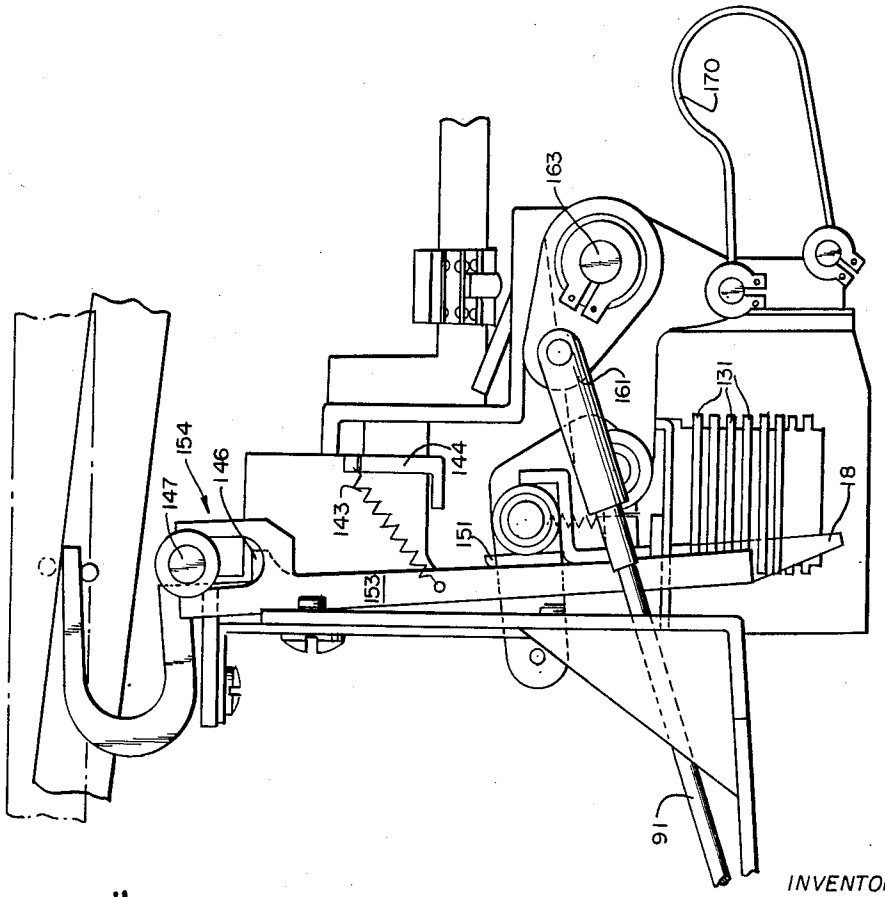

INVENTORS
John H. MacNeill
Rolph B. White, Jr.
Thomas G. Holmes
James E. Bellinger, Jr.
Charles F. West

BY Hurwitz & Rose
ATTORNEYS

Jan. 15, 1963 J. H. MacNEILL ET AL 3,073,897

CODE CONVERTER

Filed Nov. 21, 1960 6 Sheets-Sheet 5

FIG. 10.

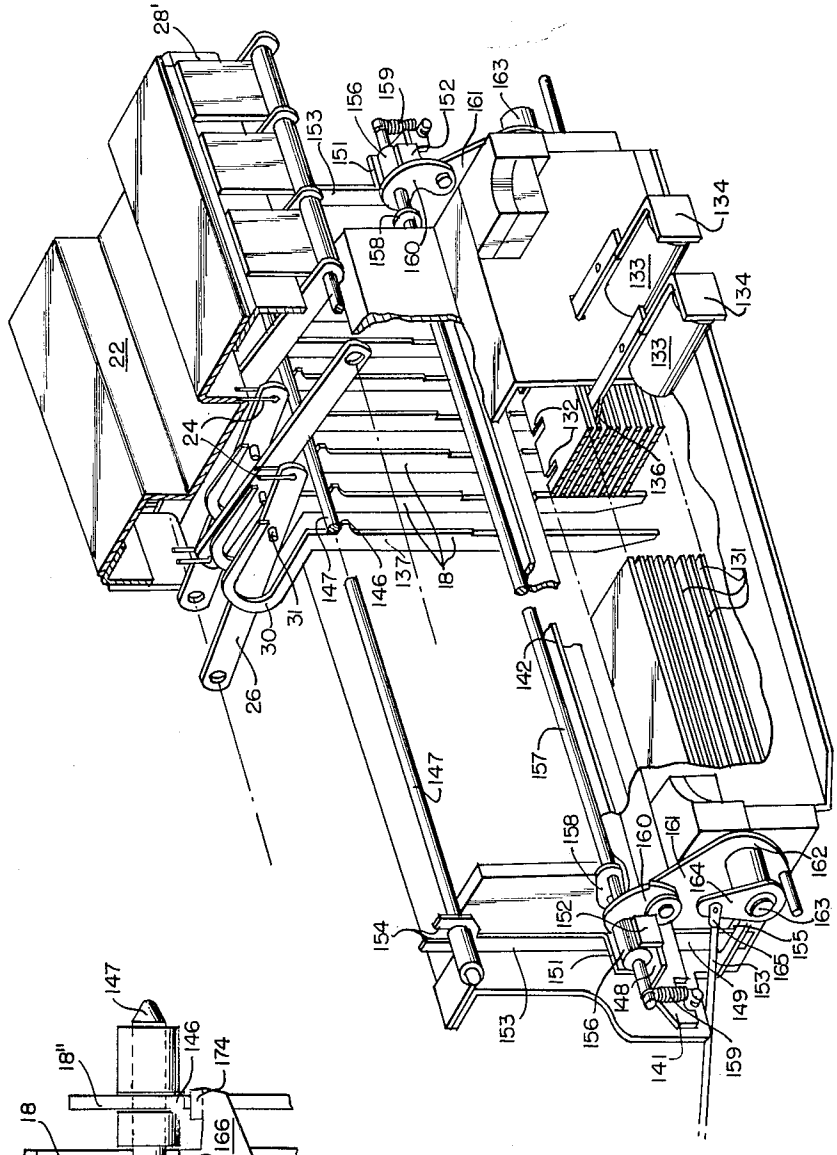

FIG. 13.

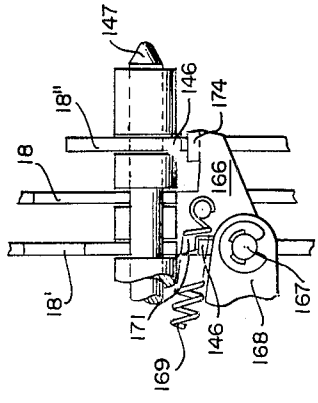

INVENTORS
John H. MacNeill
Rolph B. White, Jr.
Thomas G. Holmes
James E. Bellinger, Jr.
Charles F. West

BY Hurwitz & Rose
ATTORNEYS

Jan. 15, 1963 J. H. MacNEILL ET AL 3,073,897

CODE CONVERTER

Filed Nov. 21, 1960 6 Sheets-Sheet 6

FIG. 11.

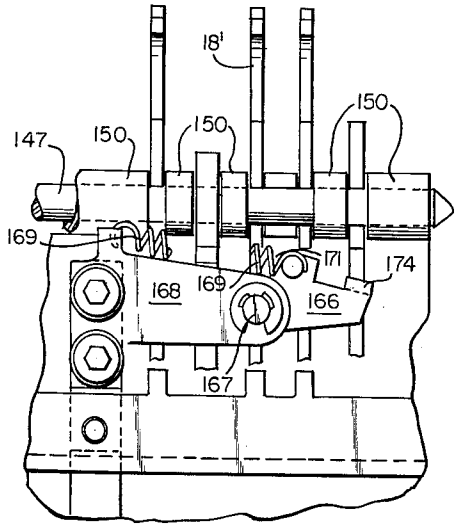

FIG. 12.

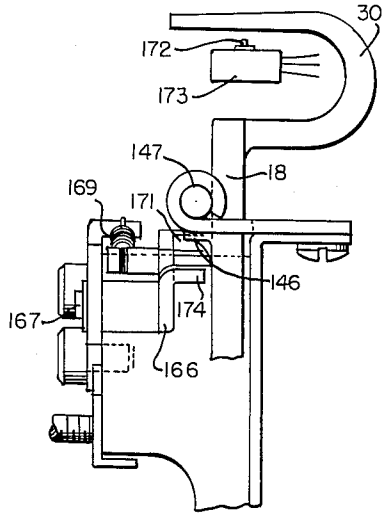

FIG. 14.

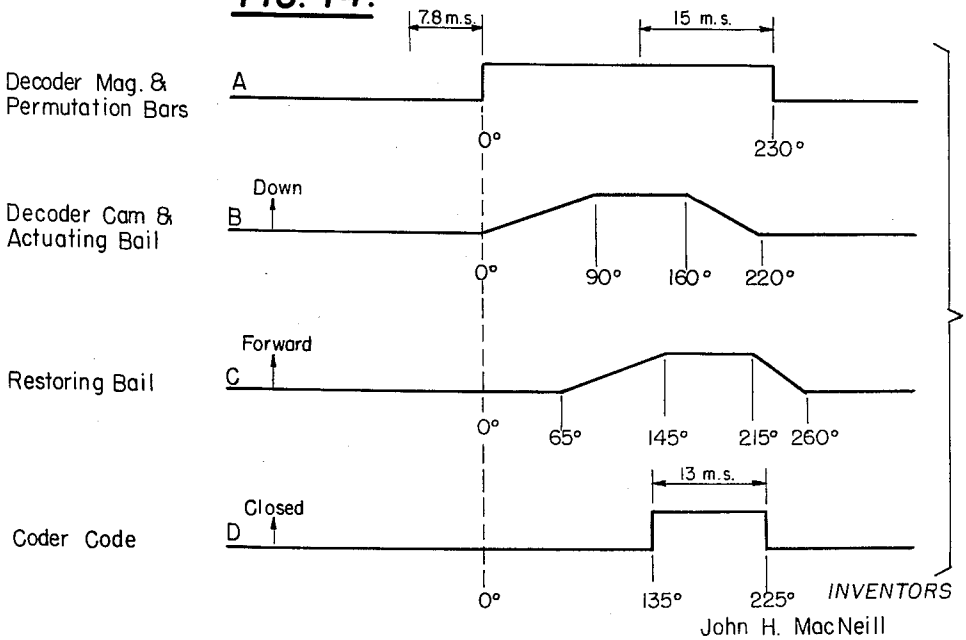

INVENTORS
John H. MacNeill
Rolph B. White, Jr.
Thomas G. Holmes
James E. Bellinger, Jr.
Charles F. West

BY Hurwitz & Rose
ATTORNEYS

United States Patent Office 3,073,897
Patented Jan. 15, 1963

3,073,897

CODE CONVERTER

John H. MacNeill, Melbourne, James E. Bellinger and Rolph B. White, Jr., Eau Gallie, and Charles F. West and Thomas G. Holmes, Melbourne, Fla., assignors to Soroban Engineering, Inc., Melbourne, Fla., a corporation of Florida

Filed Nov. 21, 1960, Ser. No. 70,757
11 Claims. (Cl. 178—26)

The present invention relates to code converters and more particularly, to a wholly mechanical converter for converting from one form of code having a predetermined number of levels to another form of code having the same or a different number of levels.

It is an object of the present invention to provide a wholly mechanical code converter system for converting one multilevel code into another multilevel code and in which it is possible to manually generate the multilevel output code independently of the input code.

It is another object of the present invention to convert a five-level telegraph code into a seven-level output code by wholly mechanical means capable of operating at a rate of approximately twenty characters per second.

It is still another object of the present invention to provide a code converter system in which an input code is converted into the movement of one of a plurality of elements which element effects actuation of a key member of an encoding apparatus which produces an output code of any desired level and in which the key apparatus of the encoding portion of the system may be manually operated so that output codes may be generated independently of input codes.

It is still another object of the invention to interconnect a decoding unit with a coding keyboard mechanism so as to permit generation of a preselectable multilevel output code either manually in response to operation of the key mechanisms of the keyboard or in response to an input multilevel code applied to the translator unit.

In accordance with the present invention, the code conversion unit comprises a telegraph or other multilevel code translator unit and a coding keyboard mechanism. The translator unit includes a plurality of translatable permutation bars and a plurality of seekers. The permutation bars are translated in accordance with an incoming code and one or more seekers may be pulled downwardly or, in general, translated, as determined by the incoming code. In the present invention, each of the seekers is adapted to pull down on a key mechanism of the coding keyboard mechanism, thereby selecting at least one of these keys in accordance with the incoming unit of coded information. The keys of the coding keyboard mechanism are arranged nominally above a plurality of translatable coding bars which are translatable between a rest position and an actuated position. When one of the keys of the keyboard mechanism is depressed, one or more of the code bars is permitted to move to an actuated position, the pattern of bars thus moving being determined by the particular key depressed and the movement of these selected bars is sensed by a plurality of switches. Each of these switches is connected to provide a different unit of a multilevel output code and the code is thus represented by the pattern of open and closed switches. The physical relationship of the translating and coding units is such that the translating unit is disposed below the coding unit so that the keys of the key actuator mechanisms of the keyboard are at the top of the machine and readily available to a machine operator. The seekers of the translating unit are each adapted to engage a pin on a cross link having a fixed pivot at one end and having a pivotal connection to the bottom of its associated key mechanism. Therefore, when a seeker

is pulled down, the cross link rotates around its one end and pulls down on the lower end of the selected key at its other end.

The operation of the translator and coder mechanisms is controlled from a single motor so that the systems are maintained in locked phase relationship or in isochronism. The coding keyboard mechanism may be of the type illustrated and described in the copending patent application Serial No. 849,949, filed on October 30, 1959, by John H. MacNeill and entitled Coding Keyboard Mechanisms. In that application, the coding mechanism was asynchronous in operation and was responsive merely to the depression of a key to initiate a coding cycle. As previously indicated in the present application of the keyboard mechanism, it must be synchronized with the operation of the translator mechanism and therefore, a cam arrangement is employed to drive the keyboard mechanism. The cam is driven from a shaft from which power is also derived for the translator mechanism. Driving energy imparted to the keyboard mechanism by the cam apparatus tends to urge a plurality of code bars to a switch actuating position and the pattern of code bars actually permitted to assume such a position is determined by the key element which has been depressed manually or pulled down by a seeker of the translator apparatus. If none of the key mechanisms are depressed or actuated by one means or another, none of the coding bars are permitted to assume a switch actuating position, although in certain instances, a common code bar is permitted to close a switch to indicate to the apparatus that a cycle has been completed even though a code is not transmitted. In a specific structure and, more particularly, in the structure illustrated in the figures of the accompanying drawings, the coding keyboard mechanism is provided with two sets of coding bars both sets of which are controlled by the same key mechanisms. A letter and figure shift mechanism of the translator determines which of the two sets of coding bars of the keyboard mechanism are utilized to generate the output code. Specifically, the figure-letter shift of the translator selectively closes one of two switches each connected in series with the different sets of switches actuated by the different sets of coding bars.

The speed of operation of the system is dependent upon a feature of the invention which permits the seekers to be returned to their inactive position immediately after selecting a key and without having to be maintained actuated during the entire coding interval. A mechanism provided in the keyboard apparatus maintains a key, once it is depressed, in its depressed condition until the end of a code operation independently of the seeker assembly. Consequently, the seekers of the translator may be returned to an inoperative position immediately after depressing a key and a new unit of code can be sent to the translator. As a result, translation of the permutation bars of the translator may be effected during the coding interval of the keyboard and overall time of operation is reduced.

The mechanism may actually be made to translate from any type of multilevel code to any other type of multilevel code within the range of the physical structure of the apparatus. Thus, the permutation bars of the translating apparatus may respond to any reasonable number of levels of code depending upon the number of permutation bars employed in the apparatus. Similarly, the keyboard mechanism may translate an input code into a code having any other number of levels depending upon the number of code bars in the keyboard mechanism. The specific type of code generated within a given-level code is determined by the arrangement of the coding bars on the keyboard mechanism. In consequence, the system is highly flexible and may be employed as a translating apparatus over a

wide range of different codes and different levels of codes.

It is therefore, another object of the present invention to provide a translating apparatus employing wholly mechanical elements for converting from a code of a particular pattern and a predetermined number of levels into another code of a particular pattern and a different or equal number of levels.

It is another object of the present invention to provide a translator mechanism which is relatively inexpensive and rugged but which has a high degree of flexibility in selection of input and output codes.

The above and still further objects, features and advantages of the present invention will become apparent upon consideration of the following detailed description of one specific embodiment thereof, especially when taken in conjunction with the accompanying drawings, wherein:

FIGURE 1 is a side view in elevation of the apparatus of the present invention;

FIGURE 2 is a perspective view of the coding keyboard mechanism of the present invention;

FIGURE 3 is a perspective view of the drive apparatus for the coding bars of the keyboard mechanism;

FIGURES 4 and 5 are perspective views of the key actuators of the coding mechanism;

FIGURE 6 is a sectional view of the key actuator latching mechanism of the keyboard;

FIGURE 7 is a side view in elevation of the translator mechanism in its unactuated position;

FIGURE 8 is a side view in elevation of the translator mechanism in the actuated position;

FIGURE 9 is a side view in elevation of the seeker of the translator in the actuated and unactuated positions;

FIGURE 10 is a perspective view of the translator mechanism of the present invention;

FIGURE 11 is a partial front view of the latch mechanism of the translator in the unlatched position;

FIGURE 12 is a partial side view in elevation of the latch mechanism of the translator;

FIGURE 13 is a partial front view of the latch mechanism in the latched position; and

FIGURE 14 is a timing diagram of the apparatus of the present invention.

Referring now specifically to FIGURE 1 of the accompanying drawings, there is illustrated a side view in elevation of the physical arrangement of the code converter of the present invention. The mechanism constitutes two basic elements; a translator designated generally by the reference numeral **1** and a coding keyboard mechanism designated generally by the reference numeral **2**. The mechanisms **1** and **2** are arranged in a cabinet having a base plate **3** to which are secured two upright members **4** and **6** constituting mounting brackets for the translator **1** and the coding keyboard **2**. The translator mechanism **1** is supported between the upright members **4** and **6** and more particularly is connected to the upright member **4** by means of a generally horizontally-extending plate **7** and is secured to the upright member **6** by a flat horizontally extending plate **8**. The coding keyboard mechanism **2** is secured to the upright member **4** by means of a plurality of bolts **9** (only one being illustrated) extending between the member **4** and a downwardly depending flange **11** of the horizontal top frame member **12** of the apparatus. The frame member **12** has a further downwardly depending flange **13** on the right side thereof as viewed in FIGURE 1 which is secured to the upright member **6** by means of a plurality of bolts **14**, only one of which is illustrated in FIGURE 1.

The coding keyboard mechanism **2** is provided with a plurality of keys **16**, only one row of which is illustrated in FIGURE 1, which are adapted upon being depressed by an operator to depress key actuators **17**. The key actuators **17** may be depressed manually as indicated above by the operator pressing on the keys **16** or when employed with the translating unit **1** are depressed or pulled downwardly by seekers **18** which form a part of the translator mechanism **1**. More particularly, each of the key actuators **17** has a bottom tab **19** which extends through a guide or grommet **21** secured in a base frame member **22** of the keyboard mechanism. Each of the tabs **19** is provided with a transverse hole **23** (see FIGURES 4 and 5) in which is disposed the cross member of a downwardly depending link **24**. The link **24** is received in an aperture in one end of a cross link **26**, the other end of which is pivoted about a shaft **27**. The tabs **19** of the key actuators **17** are arranged in two columns perpendicular to the page on which FIGURE 1 is illustrated, these columns being disposed on the right and left sides of the machines. The tabs **19** arranged in a column toward the left side of the mechanism are connected by links **24** to cross links **26** pivoted about a shaft **27** at the right side of the machine while the tabs arranged in the right hand row are connected by further links **24** to the ends of cross links **26'** pivoted about a shaft **27'** on the left side of the machine. The shafts **27** and **27'** are supported by downwardly depending elongated metal strips **28** and **28'** secured to the vertical legs of angle irons **29** and **29'**. Horizontal legs of the angle irons **29** and **29'** are secured to the underside of the base frame member **22**.

Each of the cross links **26** is provided with a pin or stub **31** which extends under the upper hook-like member **30** of a seeker **18**. Thus, when the seeker **18** is moved downward under the action of the translator **1**, it pulls down on its associated pin **31** thereby depressing one of the cross links **26** and its associated key actuator **17**. It is apparent, therefore, that any one of the key acuators **17** may be depressed either by the action of a key **16** or of its associaed seeker **18**. It will be noted that the connection between the link **26** and the seeker **18** is a one-way motion transmitting device in that the motion of the seeker **18** is transmitted to the link **26** but the motion of the link **26** is not transmitted to the seeker. In consequence, the action of the keyboard mechanism under manual and translator controls are independent of one another and coded outputs may be produced by the coding mechanism **2** independently of the translating apparatus **1**. The flexibility thus provided permits the operator of the system to insert information into whatever device utilizes the output signals from the coder **2** independently of the translator.

As previously indicated, the keyboard mechanism **2** forms the subject matter of copending application Serial No. 849,849, filed in the name of John H. MacNeill. All of the details of the mechanism are set forth fully in that application and only the essential portions of the mechanism so far as the present system is concerned are described here. The only material difference between the mechanism as described in the copending application and as described in this application is that the apparatus of the copending application employs a rotary solenoid drive while the present application employs a cam drive which receives its energy from the same source as the operational energy applied to the translating mechanism **1**. One other difference between the keyboard mechanisms of the two applications is in the number of code bars employed but this, as pointed out in the copending application, can be varied in accordance with the requirements of the system in which employed.

Referring specifically to FIGURE 2 of the accompanying drawings, the keyboard mechanism **2** includes the bottom frame member **22** and the top frame member **12**. The bottom frame member **22** has a longitudinally extending channel **32**, extending from the left to right across the drawing as viewed in FIGURE 1 and having generally vertical walls **33** and **34**. The walls **33** and **34** terminate at their upper ends in horizontal plates **36** and **37** each provided with a plurality of rows of longitudinally aligned apertures **38**. The right end of the plates **36** and **37** as viewed in FIGURE 2 are severed from the walls **33** and **34**, respectively, and are turned vertically upward to pro-

vide front vertical walls 39 and 41 spaced apart by the width of the channel 32. The channel 32, including its side walls 33 and 34, extends to the right of the end walls 39 and 41 and provides (see FIGURE 3) a support for a code bar reset bail 42 to be discussed in greater detail subsequently. Disposed between the end walls 39 and 41 immediately above the side walls 33 and 34 is a lower code bar guide 43. An upper code bare guide 44 is disposed immediately above the guide 43 and is also secured between the end walls 39 and 41.

At the left end of the bottom frame member 22 as viewed in FIGURE 2, there is provided an end wall 46 secured as by bolting to the bottom frame member 22. The end wall 46 is provided with a centrally disposed aperture 47 and a second lower code bar guide 48 is secured to the end wall 46 and extends upwardly into the opening 47. A plurality of code bars 49 (in the specific system illustrated, sixteen code bars are employed) extend from adjacent rear wall 47 to adjacent the code bar reset bail 42 at the right hand end of the mechanism. Initially all of the code bars 49 are identical and are provided with narrow slots 51 all of equal longitudinal length. The bars are coded by removing the metal between the adjacent slots 51 to provide long slots 52. The operation of the code bars in the system will be described subsequently. The ends of the code bars 49 adjacent the end wall 46 do not have slots in their upper surface so that both the upper and lower surfaces of the bars are smooth. The lower surfaces of the code bars 49 are disposed in individual slots 53 in the bottom guide plate 48 so as to provide vertical stability and lateral positioning for the individual code bars. The number of code bars employed depends upon the type of code it is wished to transmit and anywhere from five to eight code bars per code are conventional. In the present system, the code bars are divided, in the external circuits, into two groups of eight each. One group is interrogated in response to a letter shift function in the translator 1 and the other group of eight code bars is interrogated in response to a figure shift function generated by the translator 1.

An interlock bail 54 is disposed between the two groups of eight code bars 49 and is supported in slots in the various guides. The bail 54 is adapted to reciprocate from a left to a right position and is provided with a plurality of slots 60 corresponding in number to the number of slots 51 of the code bars 49 and being aligned therewith. The left ends of the code bars 49 and the actuator bail 54 are maintained in the slots 53 in the guide 48 by means of a code bar retainer plate 56 which is secured to the back wall 46 and extends downwardly into the region of the aperture 47 in the end wall 46 and terminates just above the upper surfaces of the code bars 49 and the actuator bail 54. The plate 56 therefore prevents the code bars and actuator from moving upwardly and out of the slots 53.

The code bars 49 extend past the guides 43 and 44 and terminate at their right ends as viewed in FIGURE 2 in upwardly extending shoes 57 and downwardly depending fingers 58 for purposes to be described subsequently. The actuator bail 54 also extends forwardly of the guides 43 and 44 and into the region of the core bar reset bail 42 and terminates in a downwardly extending finger 59.

As previously indicated, the upper frame member 12 has downwardly extending flanges 11 and 13 which lend rigidity to the top frame member and further are employed to secure it to the bottom frame member 3 via the vertical supports 4 and 6. The side flanges 11 and 13 are engaged by ears 63 and 64 formed on the end wall 46 and disposed perpendicular thereto. Likewise, the end walls 39 and 41 have ears 66 formed thereon (the ear 66 associated with the wall 39 being the only one illustrated) and these also are bolted to the downwardly extending flanges 11 and 13 of the upper frame member 12.

Returning now to the description of the code bar reset bail 42, the bail comprises a cross member 67 and two side arms 68 and 69 positioned at right angles to the cross member 67 and extending upwardly therefrom. The bail 42 is pivotally secured to the right ends of the side walls 33 and 34 of the frame member 22 by means of a rod 71 which extends through the side arms 68 and 69 and through the vertical walls 33 and 34. A further rod 72 extends between the side arms 68 and 69 and is disposed immediately to the right of the downward extensions 58 of the code bars, all as viewed in FIGURE 3, and immediately to the left of the downward extension 59 on the bail 54. A code bar spring hanger 73 includes a channel-shaped member 70 extending transversely to the longitudinal axis of the frame of the apparatus behind the downwardly depending arms 58 of the code bars 49. The spring hanger 73 has rearwardly extending ears 74 and 76 disposed on opposite sides thereof which are apertured and are supported by the cross rod 72 extending between the arms 68 and 69. A plurality of springs 77, two for each code bar, extend between the upper and lower arms of the channel member 70 of the spring hanger 73 and a downwardly extending finger 78 on each of the code bars 49. The fingers 78 are normally disposed just forward of the lower code bar guide 43.

In operation, if the bail 42 is rotated clockwise about the shaft 71, the rod 72 pulls forward on the downwardly depending finger 59 of the bail 54 and also pulls the code bars 49 forward under the force of the springs 77. Upon the reset bail 42 being rotated counterclockwise to the position illustrated in FIGURE 2 of the accompanying drawings, the cross bar 72 pushes against the downwardly depending fingers 59 of the code bars 49 and returns them to their initial position, the bail 54 being returned by a spring 79 extending from the top frame member 12 to a suitable aperture 81 formed on the bail 54 adjacent the downwardly depending finger 59.

In order to produce controlled rotation of the bail 42 about the shaft 71, there is provided a cam 82 secured to a shaft 83. The shaft 83 has a squared-toothed gear wheel 84 which is driven by a toothed, flexible belt 86. The belt 86 (see FIGURE 1) extends downwardly from the gear wheel 84 and around a further squared-toothed gear 87 secured to a shaft 88. The shaft 88 is secured to a suitable source of rotary power which may be continuous or intermittent as determined by system parameters. The shaft 88 also drives an eccentric 89 coupled to a drive link 91 for the translator 1. The shaft 83 is journaled in a plate 92 secured to the top frame member 12 by bolting to the side plate 13 and further by having a foot portion (not illustrated) bolted to the plate 37. The plate 92 extends longitudinally of the apaartus and terminates in a front flange 93 which extends outwardly of the mechanism and is at right angles to the main body of the plate 92. A coding contact plate 94 is secured to the righthand surface of the flange 93 immediately in front of the vertical shoes 57 of the code bars 49. The other side of the plate 94 is supported by means of a flange (not illustrated) similar to the flange 93 and is carried by a forward extension 96 of the top frame member 12.

A plurality of sets of contacts 97 are secured to the front of the contact plate 94 in a generally staggered relationship. The plate 94 is provided with a plurality of apertures 98, there being one aperture aligned with each of the code bars 49. Each aperture is transversely aligned with a different one of the code bars 49 and a pusher rod 99 extends through each of the apertures. The end of the pusher rod 99 adjacent the shoe 57 of each code bar 49 is bifurcated to form a yoke 101 which straddles the end of the shoe 57. The righthand end of the pusher rod 99, as viewed in FIGURE 2, is disposed behind a movable contact 102 of each of the sets of contacts 97 and when the code bar 49 moves forward, the pusher rod 99 causes the movable contact 102 of the set of contacts to engage its associated stationary contacts.

The output code produced by the keyboard mechanism is determined by the pattern of code bars which are per-

mitted to move forward in order to close the contacts of their associated switch contacts 97. The contacts are connected in external circuits which once each cycle of operation sense the pattern of open and closed contacts so as to convert this pattern into a group of coded voltage pulses indicative of a translated unit of information.

The pattern of code bars 49 shifted forward during any given cycle of operation is determined by which one of the key actuators 17 is pulled down by a seeker 18 during the cycle under consideration. The structure of the actuators 17 which permits selection of the code bars is illustrated in FIGURES 4 and 5 and, referring now to these figures, each of the actuators 17 comprises a horizontal cross member 106 and a vertical support and guiding member 107. Further, there is provided an upwardly extending arm 108 adapted to carry a marked key button 16 on its upper end and by means of which the actuator is depressed by an operator if so desired. The arm 106 is of approximately one-third the thickness of the slots 51 in the code bars 49 and is of such a length that it extends over the top of all of the code bars 21, there being sixteen code bars in the apparatus illustrated in the accompanying drawings. The support leg 107 terminates at its lower end in the tab 19 which is adapted to be seated in and reciprocated in a washer or grommet 21. The washer 21 is disposed in the inner recess of holes 38 in the plates 36 and 37. An upper portion 110 of the vertical member 107 is disposed above the cross member 106 and is adapted to be received in a rectangular slot 109 in a washer 111 in the upper frame member 12. More particularly, a first row of the washers 111 is arranged between two rows of circular apertures 112 and 113 toward the rear of the mechanism while the second row of washers 111 is arranged between two further rows of apertures 114 and 116. The washers 21 in the bottom frame member 22 are arranged in rows such that each washer is vertically aligned with one of the washers 111 in the upper frame member 12. The finger 108 of the actuator 17 extends upwardly through one of the apertures 112, 113, 114 or 116. It is apparent from an examination of the relative positions of the apertures 112, 113, 114 and 116 and the washers 111 and 21 that the same key 17 does not fit all locations. The keys may take different forms, as illustrated in FIGURES 2, 6 and 7, so as to accommodate a variety of possible arrangements of patterns of key buttons 16.

The apparatus is provided with a cage 104 secured to the underside of the plate 12 and extending longitudinally of the mechanism between the rows of apertures 113 and 116. The cage 104 has a plurality of transverse slots 105 disposed in alignment with the cross members 106 of the actuators 17. Each of the cross members or arms 106 are disposed in a different slot 105 of the cage 104, the slots 105 being sufficiently deep to retain the arms 106 therein in both the uppermost and lowermost positions of the actuators 17. In the aforesaid copending application the cage 104 has a plurality of balls disposed therein which serve as an interlock which prevents more than one actuator 17 from being depressed at a time. In the present application, the balls may be eliminated and the cage 104 serves as a guide for the actuators.

When one of the key actuators 17 is depressed, its cross member 106 enters an aligned set of transverse slots 51 in the sixteen code bars 49. The code bars having the metal immediately behind these slots removed to form elongated slots 52 are permitted to move forward to close their associated contacts 97 while the remainder of the code bars are held against movement by the cross member 106 of the actuator 17.

The keyboard mechanism which forms the subject matter of the aforesaid application is provided with a ball-cage interlock to prevent the actuation of more than one key at a time. Since the present invention is concerned primarily with automatic operation, the ball-cage structure may be omitted and therefore is not discussed in this application. However, since the apparatus of the present invention does contemplate some manual operation, it may be desired to include the interlock in which case it may take the form of the structure of the copending application.

As previously indicated it is an object of the present invention to maintain the selected keys in their actuated or down position for a preselected sensing interval, even though the decoder seekers 18 have been restored. This feature of the apparatus is provided by the bail 54 and a structural arrangement on each of the actuators 17.

Extending downwardly from the cross member 106 of the actuator 17 is a U-shaped member 117 having a base member 118 of a generally diamond-shaped cross section as illustrated in FIGURE 6. The U-shaped member 117 defines an aperture 119 between the main body of the cross member 106 and the base member 117. When a key is depressed, the base member 118 of the actuator 17 enters one of the rearwardly sloping slots 60 in the bail 54 and the bail 54 is driven to the right. Immediately thereafter, the cam 82 produces clockwise rotation of the bail 42. If the actuator 17 did not drive the bail 54 completely to the right the shaft 72 engages the member 59 and pulls the bail 54 to its forward position and holds it there. Upon forward movement of the bail 54, one of its sharp leading edges 121 (see FIGURE 6) defined by the rearward edge of the slot 60 and the upper surface of the bail, engages the sloping surface of the base 118 of the depressed actuator 17. As a result, the key 17 is pulled completely down until the cross member 118 is seated at the bottom of the slot 60. It will be noted that in this position, the edge 121 associated with the depressed actuator 17 is disposed on the base 118 and locks the actuator 17 in the down position. The slots 60 associated with unselected actuators 17 are disposed forward of the U-shaped members 94 of these actuators so that they are locked out and cannot be depressed. When the cam 82 permits the arm 69 to rotate counterclockwise at the end of a coding cycle, the spring 79 returns the bail 54 to its rearward position thereby releasing the key 17 from under the locking projection or edge 121. The keys 17 are returned to their uppermost position by key-return springs 122 extending between the lower region of the vertical member 107 of the key 17 and side plates 123 which are secured to the side plates 11 and 12 respectively of the upper frame member 12.

As previously indicated, the coding mechanism may be provided with two common sets of code bars, one for letter shift and one for figure shift. These bars may, for purposes of example, be disposed on opposite sides of the bail 54 immediately adjacent thereto and may be employed to close a contact each cycle of operation. A further common contact may be employed to sense the operation of the bail 42, this contact arrangement constituting the switch element 124 of FIGURE 2 of the accompanying drawings. The element 124 is secured to a flange 126 extending outwardly from the side channel member 33. The bail 42 has an upwardly extending arm 68 having a tab 128 thereon which is adapted to engage an actuator of the switch 124. Thus, various common contacts may be employed for timing and gating the functions performed in the sensing circuits of the apparatus.

As previously indicated, the key actuators 17 of the coding mechanism 2 are selected by means of a conventional telegraph translator 1. The operation of the translator 1 is well known in the art and the description herein is merely sufficient to provide a complete operating description of the apparatus of the invention. The translator employs a plurality of permutation bars 131, the actual number illustrated for purposes of the present invention being six. Each of the bars 131 is a thin, flat, elongated member having notches 132 formed in the edge thereof adjacent the seekers 18 as viewed in FIGURE 10. Each of the bars is adapted to be selectively translated parallel to its elongated dimension by means

of a different electromagnet 133, there being six such magnets. Each of the magnets is provided with an armature 134 which engages a tab 136 on the forward surface of its associated bar 131. The edges of the bars bearing the notches or grooves 132 are disposed immediately forward of the lower ends of an upright portion 137 of the seekers 18.

Each of the portions 137 of the seekers 18 have a recessed section 138 defining a shoulder 139 which is adapted to receive the end of a vertical leg 141 of a seeker bail 142. Each of the seekers 18 is urged into contact with the seeker bail 142 by a separate spring 143 extending between each of the seekers and a spring retainer 144. Each of the seekers has a forwardly extending lip 146 which, when the seeker is in its unactuated or upwardmost position, engages the under side of a shaft 147 that extends across the entire machine in front of all the seekers 18. The shaft 147 carries a plurality of spacers 150 which engage the opposite sides of the seekers and guide them during movement. Engagement of the tab 146 with the shaft 147 limits the upward movement of the seeker under the influence of the spring 143.

The shaft 147 also provides a pivot point for the seeker 18 when the bail 142 is withdrawn toward the right as viewed in FIGURES 7, 8 and 9, during a seeker selection operation.

The bail 142 is a right angle member throughout most of its length and includes the downwardly extending leg 141 and a horizontal member 148. Located at both ends of the bail 142 and integral therewith are U-shaped members 149 defined by the horizontal member 148 and upstanding legs 151 and 152. Secured to the U-shaped members 149 are upwardly extending guide arms 153 which terminated in yokes 154 disposed about the shaft 147 between spacers 150. The spacers 150 provide lateral stability for the bail 142 and the shaft 147 defines an upper pivot therefor. The guide arms 153 also extend downward from the U-shaped member 149 and into slots 155 in a frame member of the apparatus. The contact between the back of the slots 155 and the lower portion of guide arms 153 define a lower pivot point for the bail 142.

A cylindrical bushing 156 is disposed in each of the U-shaped members 149, the bushings being carried on the opposite ends of a shaft 157 parallel to the shaft 147. The shaft 157 is carried in two links 158 pivotally secured to a frame member of the apparatus. The links 158 are perpendicular to the shaft 157 and extend to the left of the shaft as viewed in FIGURES 1 and 10. Further, a pair of springs 159 extends generally downward from both ends of the shaft 157 to the leg 141 of the bail 142. In consequence, the bail 142 is urged into engagement with the bushings 156 and the springs 143 urge the shoulder 139 of the seekers 18 into engagement with the bottom of the leg 141 of the bail 142.

The shaft 157 is pivotally secured, adjacent the bushings 156, to a pair of toggles or links 160. The ends of the links 160 remote from the bail 142 are pivoted to an arm 161 of an L-shaped member 162. The member 162 is supported at its apex on a shaft 163 which is rotatable about its own axis. The shaft 163 also has secured thereto a link 164 which is pivotally secured at a point remote from the shaft 163 to a drive device 165. The end of the drive device 165 remote from the link 164 is connected to the drive rod 91 to transmit driving energy to the translator 1.

The apparatus as illustrated in FIGURE 7 is in its unactuated position and the springs 159 operating at opposite ends of the bail 142 and the springs 143 reacting through seekers 18 tend to maintain the bail 142 in an upward position in which the link 160 is aligned with the arm 161 of the link 162. Also the links 158 are inclined upwardly as illustrated in FIGURES 1 and 10. When the mechanism is actuated, the drive rod 91 is pulled to the left causing the link 164 and, therefore, the shaft 163 to rotate counterclockwise. The link 162 is rotated counterclockwise against the force of a restoring spring 170 and pulls on the right end of link 160. The force applied to link 160 is transmitted to the shaft 157 which rotates about the left ends of links 158. Initially the motion of the shaft 157 is predominately to the right and the bail 142 follows this motion. The springs 159 cause all of the seekers 18 to follow the motion of the bail. Prior to movement of the bail, the permutation bars 131 selected by the pattern of energized magnets 133 were held toward the left as illustrated in FIGURE 10. In consequence of this action, certain of the slots 132 in the permutation bars 131 may become aligned with corresponding slots in each of the other bars so as to provide a complete passage into the face of the bars adjacent the seekers 18. The seekers 18 which are adjacent any such vertical passage follow the bail 142 through its complete cycle of movement to the right and, in consequence, the shoulder 139 remains in engagement with the bottom of the leg 141 of the seeker. The remaining or unselected seekers encounter at least one unperforated surface of one of the bars 131 and therefore, cannot follow the motion of the bail 142 and become disengaged therefrom. The seeker (or seekers) 18 which remains in engagement with the bail 142 and follows the downward movement of the bail which commences when the links 158 approach the horizontal.

As previously indicated, each cross link 26 of the coder unit is associated with a different seeker 18 and key actuator 17 of the coder mechanism and therefore, a key 17 is actuated as determined by the pattern of voltage pulses applied to the electromagnets 133 of the translator apparatus.

As was previously indicated, the keyboard coding mechanism 2 is provided with two sets of coding bars and distinct output codes are produced by each of the two sets of bars. A mechanism must be provided for selecting which of the two sets of bars are connected in the output circuit and this is determined by a letter or figure shift code, or other shift code applied to the translator mechanism 1. The apparatus of the present invention is constructed such that one or more of the seekers may be latched into a predetermined position so as to control the output code from the coding apparatus. Specifically, a shift seeker is normally latched in its downward position and a switch is employed to sense the position of the seeker. When the shift seeker is latched, the aforesaid switch may be used to connect the switches of the coder associated with one of the sets of external circuit and when the shift seeker is unlatched, the switch is positioned so as to connect the other set of code bar switches to the output circuit. In this situation the switch is employed to apply D.C. voltage to one or the other set of code bar contacts through which it is coupled to the external circuit.

Referring now specifically to FIGURE 11 of the accompanying drawings, the figure-letter shift apparatus is illustrated. A figure shift seeker designated 18′ is normally latched in its downward position by means of a latch means 166. In FIGURE 11, the seeker 18′ is shown in its unlatched position, whereas in FIGURE 13, the seeker 18′ is illustrated in the latched position. The bracket 168 is pivotally secured to a shaft 167 supported by a latch 166 secured to the front housing of the apparatus. The latch 166 is biased for counterclockwise rotation by means of a spring 169 and the main body of the latch is mounted forwardly of the seekers and completely out of their path of movement. The latch 166 has a projection 171 which extends toward the seeker 18′ and in the position illustrated in FIGURE 11 engages the side of the projection 146 of the seeker 18′. If the seeker is depressed and the projection 146 moves downwardly, the top of the projection 146 passes under the bottom of the extension 171 and the latch 166 is rotated counterclockwise so that the extension 171 is rotated into a position above the shoulder 146 and held there by the spring 169. This condition is illustrated in FIGURE 13

of the accompanying drawings. Thus, when a figure shift code is received by the apparatus, the seeker 18' is depressed and maintained in a depressed position. In this position, the seeker 18' engages an actuator 172 of a single pole, doube throw switch 173. The switch 173 is connected to supply power to the coding bar switches of the coding mechanism. More particularly, when the actuator 172 is depressed by seeker 18', in a specific embodiment of this invention, it generally applies power to the switches of the letter shift coding bars whereas when the seeker 18' is raised and becomes disengaged from the actuator 172, power is applied to the switches of the figure shift coding bars of the encoder.

In order to release the latch 166, there is provided a shift release seeker 18'' also having a shoulder 146. The latch 166 has an arm 174 disposed on an end opposite the end on which the projection 171 is arranged. The arm 174 extends towards the seekers and is aligned as seen at FIGURE 11 with the seeker 18'', being disposed normally below the projection 146 of this seeker. When it is desired to release the latch 166 and return the seeker 18' to its raised or unactuated position, a shift code is received by the machine and the seeker 18'' is depressed. The shoulder 146 of the seeker 18'' engages the arm 174 of the latch 166 and rotates it clockwise. As result, the projection 171 of the latch is rotated clockwise until it becomes disengaged from the shoulder 146 of the seeker 18' and the seeker is returned to its unactuated position by its normal return spring.

It has been indicated above that each code input to the translator 1 produces downward movement of one or more seekers. Normally only one seeker is depressed in response to an incoming code. However, under special circumstances, it may be desired to depress additional seekers; for instance, in the case of a figure shift or a letter shift. In addition to opening the contact arrangement of the switch 173 it may be desired to produce an output code from the coder indicating that a figure or letter shift operation has taken place since such information may be useful to the operator or in the external equipment supplied by the coder. Therefore, under these and other special circumstances, more than one seeker may be depressed in response to a particular code.

As an example of a conversion process which may be of interest, reference is made to Table 1 below.

Table 1

Code Conversion Chart

Input Code			Output Code
Channel Numbers	Ltrs.	Figs.	Channel Numbers
1 2 3 4 5			7 6 5 4 3 2 1
1 1 0 0 0	A		1 1 0 0 0 0 0
1 0 0 1 1	B		0 1 0 0 0 0 1
0 1 1 1 0	C		0 1 0 0 0 1 0
1 0 0 1 0	D		1 1 0 0 0 1 1
1 0 0 0 0	E	3	0 1 0 0 1 0 0 1 0 1 0 1 1 0
1 0 1 1 0	F		1 1 0 0 1 0 1
0 1 0 1 1	G		1 1 0 0 1 1 0
0 0 1 0 1	H		0 1 0 0 1 1 1
0 1 1 0 0	I	8	0 1 0 1 0 0 0 0 0 1 1 0 1 1
1 1 0 1 0	J		1 1 0 1 0 0 1
1 1 1 1 0	K		1 1 0 1 0 1 0
0 1 0 0 1	L		0 1 0 1 0 1 1
1 1 1 0 0	M		1 1 0 1 1 0 0
0 1 1 0 0	N		0 1 0 1 1 0 1
0 0 0 1 1	O	9	0 1 0 1 1 1 0 1 0 1 1 1 0 0
0 1 1 0 1	P	0	1 1 0 1 1 1 1 1 0 1 0 0 1 1
1 1 1 0 1	Q	1	0 1 1 0 0 0 0 0 0 1 0 1 0 0
0 1 0 1 0	R	4	1 1 1 0 0 0 1 0 0 1 0 1 1 1
1 0 1 0 0	S		1 1 1 0 0 1 0
0 0 0 0 1	T	5	0 1 1 0 0 1 1 0 0 1 1 0 0 0
1 1 1 0 0	U	7	1 1 1 0 1 0 0 1 0 1 1 0 1 0
0 1 1 1 1	V		0 1 1 0 1 0 1
1 1 0 0 1	W	2	0 1 1 0 1 1 0 1 0 1 0 1 0 1
1 0 1 1 1	X		1 1 1 0 1 1 1
1 0 1 0 1	Y	6	1 1 1 1 0 0 0 1 0 1 1 0 0 1
1 0 0 0 1	Z		0 1 1 1 0 0 1
0 0 0 0 0	Blank		
0 0 1 0 0	Space		
0 0 0 1 0	Carriage Return		
0 1 0 0 0	Line Feed		
1 1 0 1 1	Figures		
1 1 1 1 1	Letters		

The translator receives a five level input code which may be a telegraph code. The coder mechanism produces a seven level code output, each output code being indicative of a different input code. In the telegraph code system, the same telegraph code may represent two different units of information depending upon whether a letter or figure shift indication has been received. Referring to Table 1, reference is initially made to the E code under the letter shift. It will be noted that the telegraph code 10000 represents either the letter E or the numeral 3. If the apparatus is in a letter shift situation, the code represents an E whereas, if it is in a figure shift situation, it represents the numeral 3. This, of course, is programmed by the present apparatus since when the translator is in the letter shift condition, one set of code bar switches is connected to the output circuits whereas, when the apparatus is in the figure shift condition, the other set of seven code bars is connected with the output circuits. A similar situation arises with the letter I and figure 8 and letter O and figure 9 and various other letter and number combinations, as indicated in the table. Certain input codes are employed which do not necessarily produce an intelligence output code from the coder; these units of input information relating to blank, space, carriage return, line feed, and figure and letter shifts. As to

all of these operations, an output code may be produced from the coder if so desired.

Referring now specifically to FIGURE 14 of the accompanying drawings, which illustrate a typical operating embodiment of the present invention wherein the input drive shaft is rotated at approximately 20 revolutions per second, the graph A indicates the interval during which the decoder magnets and the permutation bars are actuated, these being initiated at zero degree rotation of the input shaft. The magnets remain actuated for 230° of the cycle of the rotation of the input shaft. Graph B illustrates vertical movement of the actuating bail and therefore of the selected seeker. It will be noted that the selected seeker has reached its maximum downward position after 90° of rotation of the shaft and begins its upward movement at 160° of rotation. Graph C illustrates movement of the bail **54** of the coder and therefore of the code bars. Referring to graph D, the coder switches are closed at 135° of rotation of the shaft and are maintained closed until approximately 225° of rotation. An examination of graphs B, C and D discloses that the seekers have been completely returned to their unactuated position by approximately the same time that the coding switches are opened. This is permissible because of the latching of the code bars in the coding mechanism.

The code translator of the present invention may be employed in a tape processing system in which a tape bearing telegraph code is read by a conventional reading mechanism the output code voltage from which would be employed to control the magnets of the translator **1**. In such a system, the output voltages developed by the coder mechanism **2** would be employed to control the punch magnets of a tape punching apparatus forming the output element of the system. In this system, the tape reader and tape punch would be synchronized with the reader and coder mechanisms and normally would be driven from a common shaft via conventional power take-off mechanisms.

While we have described and illustrated one specific embodiment of our invention, it will be clear that variations of the details of construction which are specifically illustrated and described may be resorted to without departing from the true spirit and scope of the invention as defined in the appended claims.

What we claim is:

1. A code conversion apparatus comprising a first plurality of mechanical elements, means for moving selected ones of said mechanical elements in accordance with input information represented in a first predetermined code form, a second plurality of mechanical elements, means for producing at least one distinct unit of output information represented in a second predetermined code form in response to actuation of each element of said second plurality of mechanical elements, and means for directly coupling at least some of said first plurality of elements to said second plurality of elements so as to actuate a different second element in response to movement of each first element.

2. The combination according to claim 1 wherein said means for directly coupling is a one way connection for transmitting motion from said first to said second elements only.

3. The combination according to claim 1 further comprising manual means for selectively actuating said second plurality of mechanical elements.

4. The combination according to claim 1 further comprising means for maintaining said second plurality of elements actuated for a predetermined interval after said first mechanical elements have initiated actuation thereof.

5. The combination according to claim 1 wherein said means for producing includes means for producing at least two units of output information in response to actuation of each element of said second plurality of mechanical elements and means responsive to movement of a predetermined one of said first elements for selecting one of said two units of said output information.

6. A code conversion apparatus comprising a coding keyboard mechanism having a plurality of manually operable key elements, means for generating a plurality of voltage pulses indicative of the operated key element in a first digital code, a translating mechanism having a plurality of operable seeker elements, means for operating a seeker element as determined by the pattern of voltage pulses arrayed in accordance with a second digital code, and mechanical linkages interconnecting each of said seeker elements and a different one of said key elements so as to operate a key element in response to operation of its associated seeker element.

7. A code conversion apparatus comprising a coding keyboard mechanism having a plurality of longitudinally extending code bars each having a plurality of teeth formed thereon, said code bars each being longitudinally reciprocable between a first and a second position, said teeth of one of said bars being aligned with corresponding teeth of the other of said bars when all of said bars are in said first position so as to form transverse rows of teeth and spaces between teeth, a plurality of manually operable key elements movable between an actuated and an unactuated position, each of said key elements having a transverse member aligned with a different row of spaces in said code bars, said transverse elements being disposed in a row of spaces only when in said actuated position, means for biasing said key elements to their unactuated positions, a translating mechanism having a plurality of seekers, each being reciprocatable between an actuated and an unactuated position, a one way linkage between each of said key elements and a different one of said seekers so as to operate a key element in response to movement of its associated seeker in a first direction only, permutation means responsive to information arranged in accordance with a first code for moving at least one of said seekers in said first direction, actuator means operable after said permutation means to urge said code bars toward their second position, and means for generating information in an output code form as determined by the pattern of code bars moved to their second positions.

8. The combination according to claim 7 wherein said code bars are divided into two parallel groups with each group providing aligned spaces, each of said groups of code bars having distinct means for generating output code forms and means responsive to operation of one of said seekers for selecting one of said output code forms.

9. The combination according to claim 8 wherein said means for selecting comprises a latch for indefinitely retaining a first predetermined seeker in its actuated position, and means for releasing said latch in response to actuation of a second predetermined seeker.

10. The combination according to claim 9 comprising switching means for sensing the position of said first predetermined seeker.

11. The combination according to claim 7 further including means for establishing a cycle of operation for said apparatus and means for retaining a selected actuator in its actuated portion for a predetermined position of the cycle after initiation of movement of said seeker toward its unactuated position.

References Cited in the file of this patent

UNITED STATES PATENTS

2,267,936	Marrison	Dec. 30, 1941
2,309,222	Spencer	Jan. 26, 1943
2,370,989	Nichols	Mar. 6, 1945
2,643,291	Potts	June 23, 1953