United States Patent [19]

Hurkamp

[11] **3,799,384**

[45] **Mar. 26, 1974**

[54] **COLLAPSIBLE SHIPPING CONTAINER**

[76] Inventor: **Charles H. Hurkamp,** 1 Baynard Cove Rd., Hilton Head Island, S.C. 29928

[22] Filed: **Feb. 28, 1972**

[21] Appl. No.: **229,706**

[52] **U.S. Cl.** **220/6,** 220/1.5

[51] **Int. Cl.** **B65d 7/24**

[58] **Field of Search** ..... 220/6, 7, 4, 1.5; 217/14, 217/15, 46, 47; 108/54; 312/258; 105/369 S, 367

[56] **References Cited**

UNITED STATES PATENTS

2,739,776	3/1956	Terando	108/54
3,628,466	12/1971	Lyons et al.	105/367 X
2,782,955	2/1957	Gordon	220/6
1,156,221	10/1915	Focks	217/47
2,573,089	10/1951	Armenia	220/7

Primary Examiner—George E. Lowrance
Assistant Examiner—Steven M. Pollard
Attorney, Agent, or Firm—Rogers, Ezell & Eilers

[57] **ABSTRACT**

A collapsible shipping container has the lower edge of one side wall thereof pivoted to one side of the base and has the upper edge of that side wall secured to the top by one set of rollers; and has the upper edge of the other side wall thereof pivoted to the other side of the top and has the lower edge of that other side wall secured to the base by another set of rollers. The one set of rollers permits the upper edge of the one side wall to move laterally of the top in one direction; and the other set of rollers permits the lower edge of the other side wall to move laterally of the base in the opposite direction. The oppositely-directed movements of the upper edge of the one side wall and of the lower edge of the other side wall permit the top to move downwardly toward the base as the collapsible shipping container is being collapsed.

35 Claims, 16 Drawing Figures

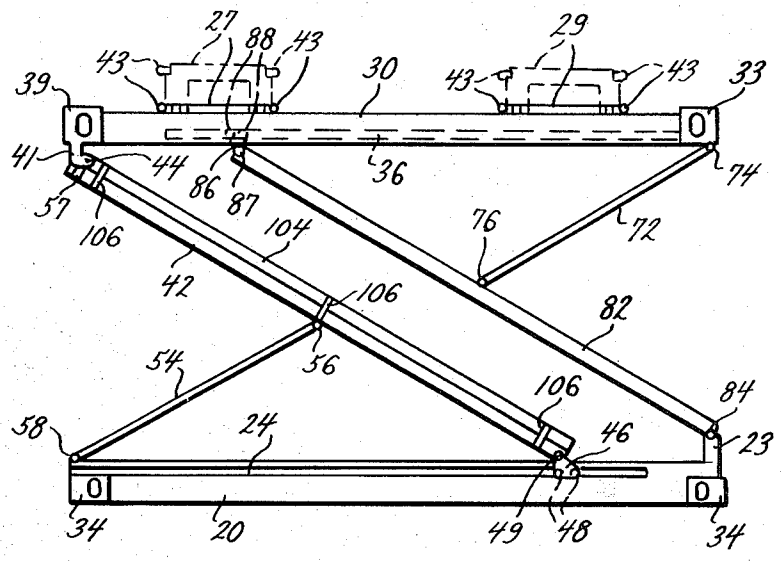

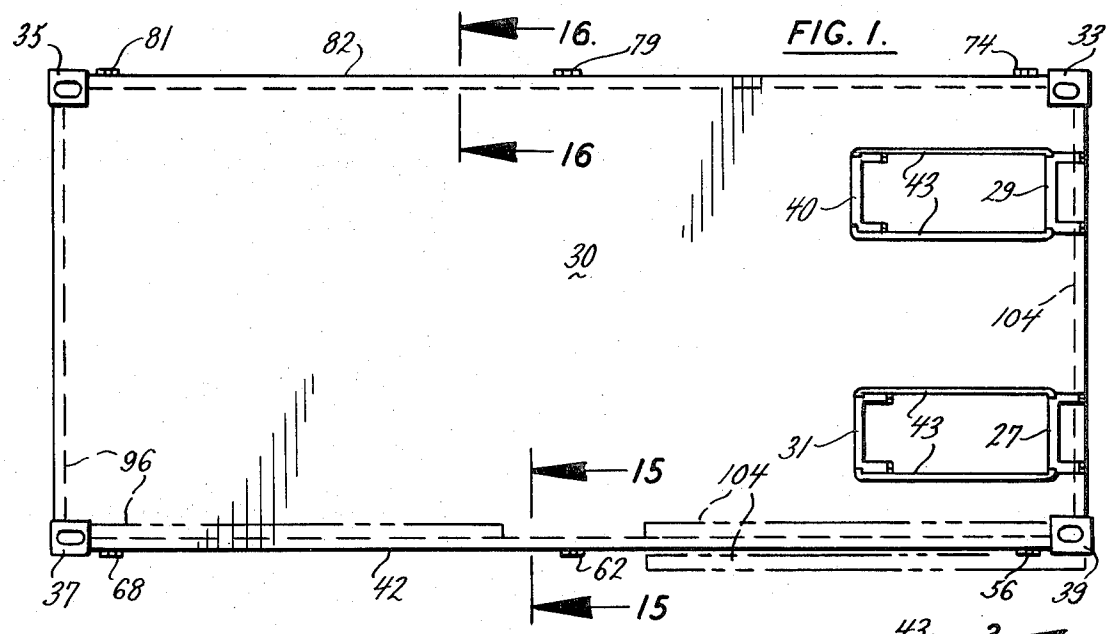

FIG. 1.

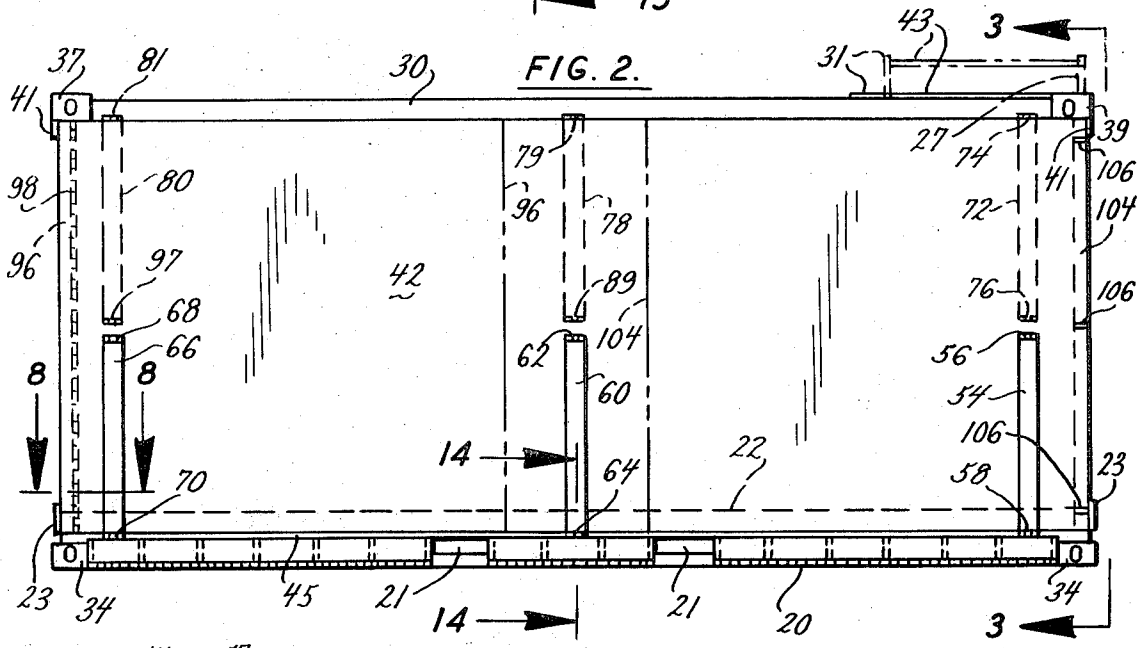

FIG. 2.

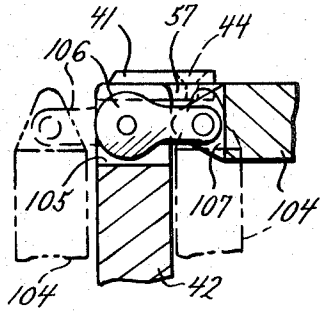

FIG. 7.

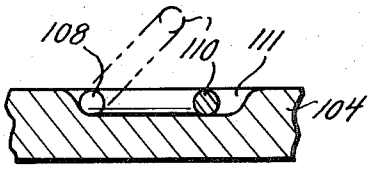

FIG. 5.

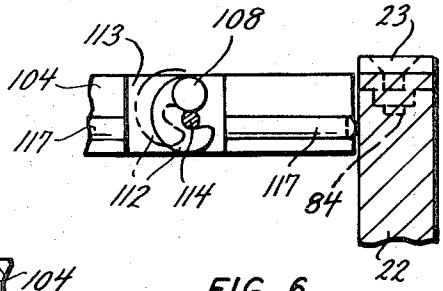

FIG. 6.

FIG. 3.

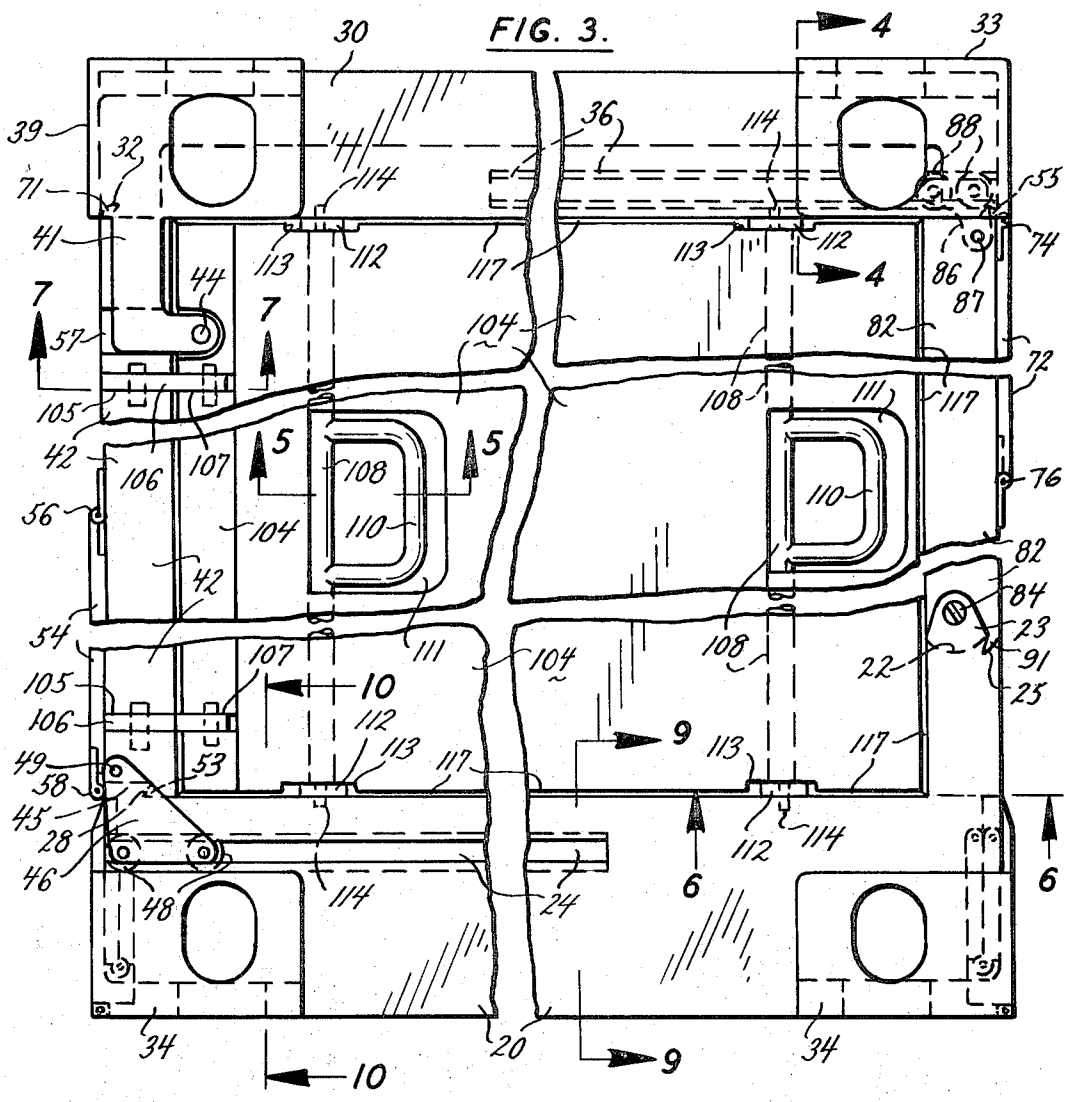
30
33
4
39
32
71
41
44
7
57
105
42
106
107
56
54
49
58
45
28
46
48
53
113
112
114
117
36
104
108
110
111
5
10
9
6
24
20
34
88
55
74
86
87
82
72
76
84
23
91
25
22

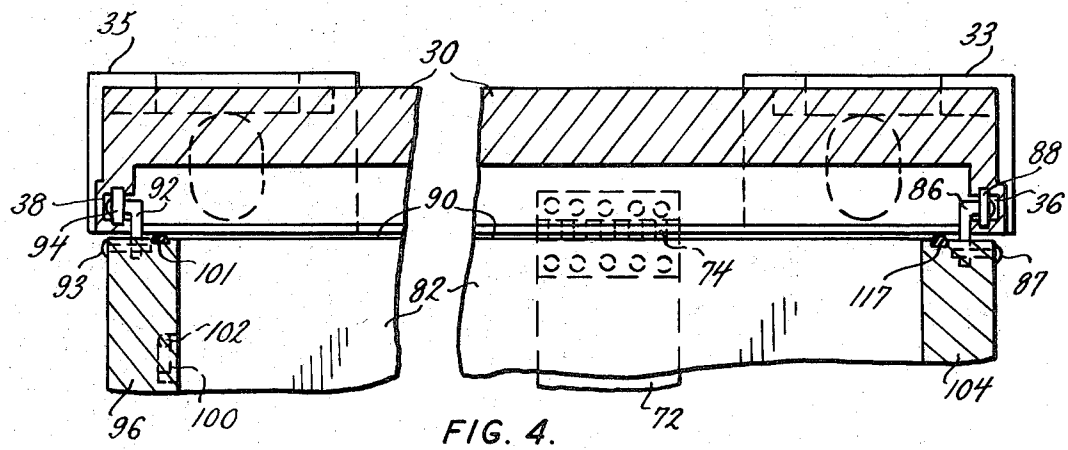
35
30
33
38
94
93
92
101
102
96
100
90
82
74
72
86
88
36
87
117
104

FIG. 4.

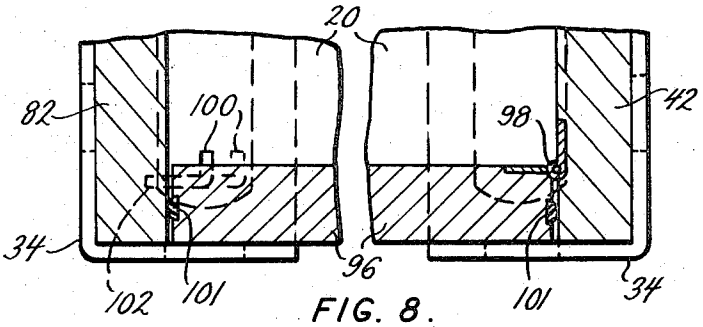

FIG. 8.

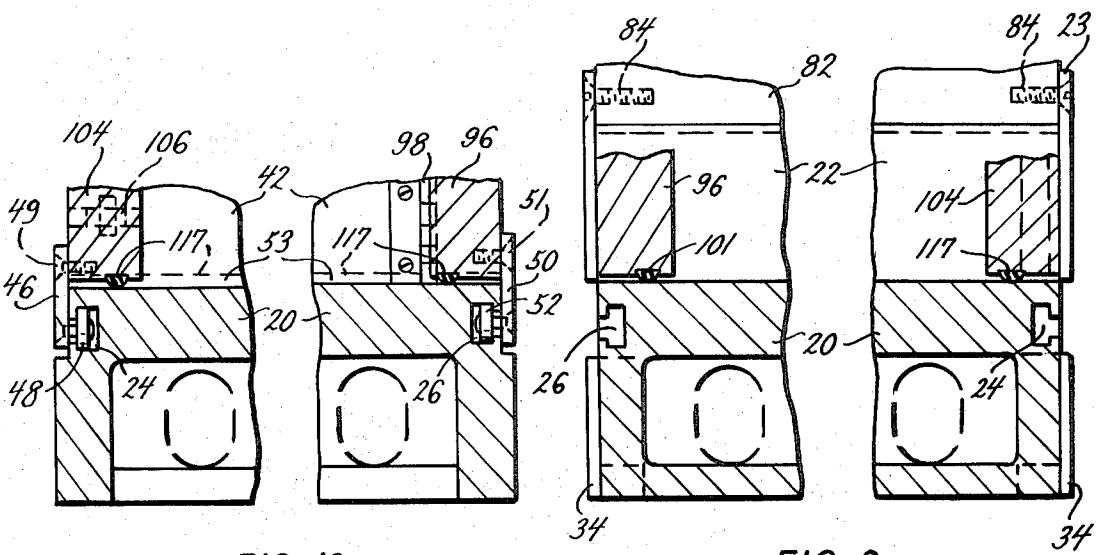

FIG. 10.

FIG. 9.

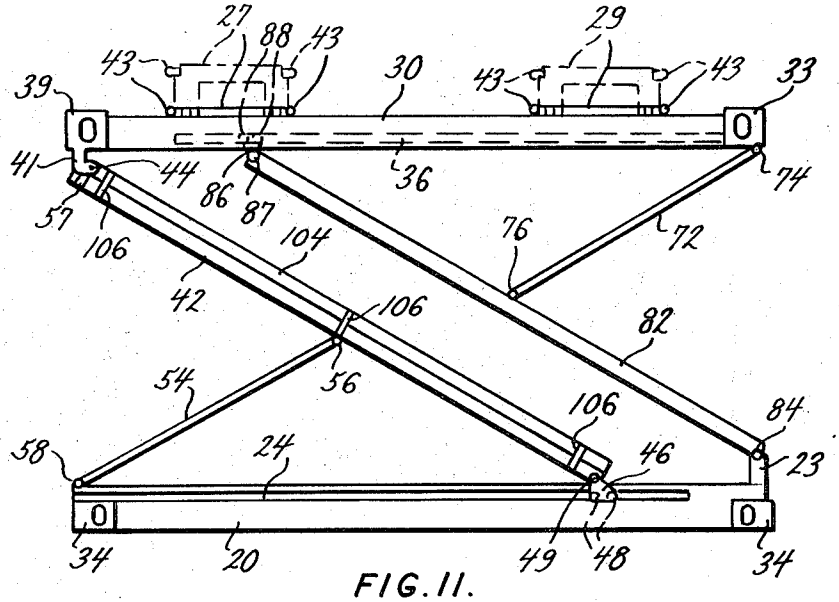

FIG. 11.

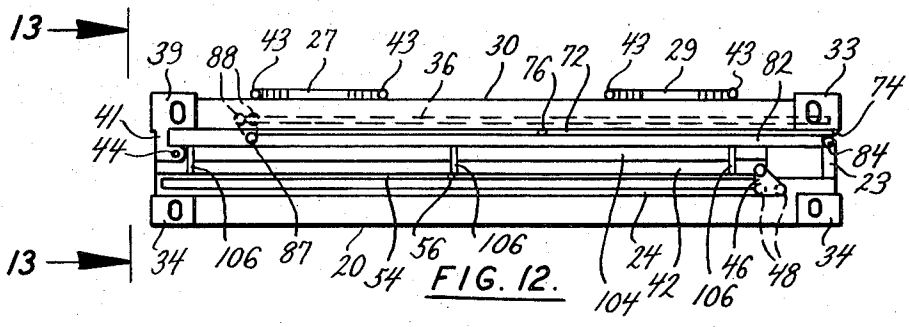

FIG. 12.

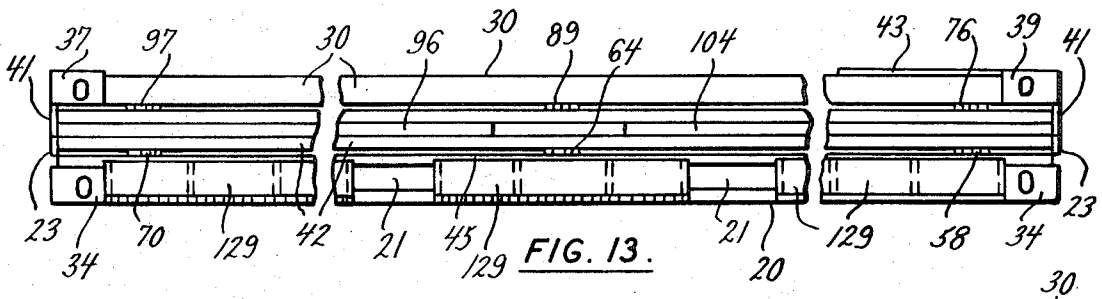

FIG. 13.

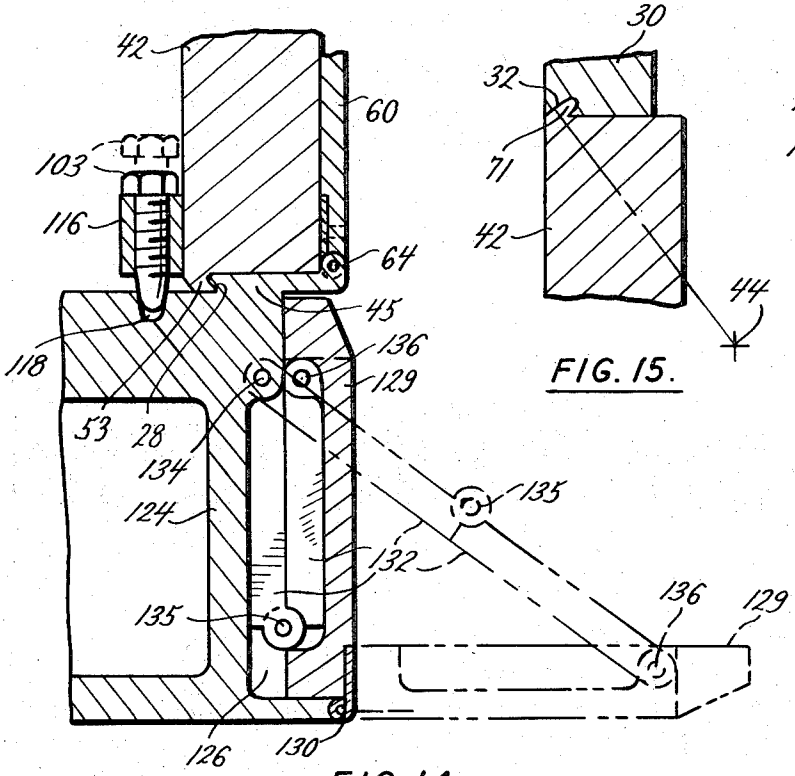

FIG. 14.

FIG. 15.

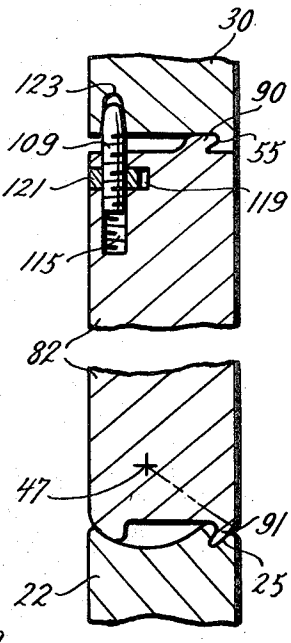

FIG. 16.

COLLAPSIBLE SHIPPING CONTAINER

This invention relates to improvements in collapsible shipping containers. More paticularly, this invention relates to improvements in collapsible shipping containers which have stiff tops, bases and side walls.

It is, therefore, an object of the present invention to provide a collapsible shipping container which has a stiff top, a stiff base and stiff side walls.

BACKGROUND OF THE INVENTION

Collapsible shipping containers have been proposed wherein each of the side walls consisted of two or more panels that were hinged together. During the collapsing of those shipping containers, the panels of each side wall pivot relative to each other. Such shipping containers are usable; but a sturdier and more rugged shipping container would be even more resistant to abuse in service.

SUMMARY OF THE INVENTION

The present invention provides a collapsible shipping container wherein each of the side walls is essentially a unitary panel and is stiff. That collapsible shipping container is sturdier and more rugged than are collapsible shipping containers wherein each of the side walls include two or more panels that are hinged together. It is, therefore, an object of the present invention to provide a collapsible container wherein each of the side walls is essentially a unitary panel and is stiff.

Some collapsible containers have side walls that are stiff; but the upper edges of those side walls must be separated from the top of that container as that container is being moved into its collapsed position. It is difficult to move such containers between their erected and collasped positions; and hence it would be desirable to provide a collapsible shipping container which utilizes stiff side walls but which does not require those side walls to be separtaed from the top. The present invention provides such a collapsible shipping container; and it is, therefore, an object of the present invention to provide a collapsible shipping container which utilizes stiff side walls but which does not require those side walls to be separated om the top.

A closure is provided for the front of the collapsible shipping container of the present invention; and that closure is hinged to one side wall of that container in such a way that it can be selectively moved into face-to-face relation with the outer face of that side wall or into face-to-face relation with the inner face of that side wall. When that closure is in face-to-face relation with the outer face of that side wall, the front of the collapsible shipping container is fully open — and hence filling or emptying of that container is facilitated. When that clousre is in face-to-face relation with the inner face of that side wall, that closure can be moved as a unit with that side wall as the container is being moved into its collapsed position. It is, therefore, an object of the present invention to provide a collapsible shipping container which has a closure for the front thereof that is hinged to one side wall of that container in such a way that it can be selectively moved into face-to-face relation with the outer or the inner face of that side wall.

If it is desirable to maintain the top and the base of the collapsible shipping container in substantial register with each other during the collapsing and erection of

that collapsible shipping container, straps can be pivoted to one side of the base and to one of the side walls — about midway between the upper and lower edges of that side wall; and further straps can be pivoted to the opposite side of the top and to the other of the side walls — about midway between the upper and lower edges of that side wall. Those straps will effectively limit any tendency of the top to shift laterally relative to the base during movement of that top toward its erected or collapsed position. It is, therefore, an object of the present invention to provide a collapsible shipping container which has straps pivoted to one side of the base and to one of the side walls —about midway between the upper and lower edges of that side wall, and which has further straps pivoted to the opposite side of the top and to the other of the side walls — about midway between the upper and lower edges of that side wall.

Shipping containers are usually made eight feet wide, but the pallets on which products are packed and shipped are usually made nine feet wide. As a result, the standard and usual shipping container is not compatible with securing systems, such as the Air Force 463L restraint system, which are intended to receive and restrain pallet-type loads. It would be desirable to provide a standard-width shipping container which was compatible with securing systems which were intended to receive and restrain pallet-type loads; and the present invention does so by providing a shipping container which has selectively extendable and retractible spacers secured to the base thereof. Those spacers will normally be in retracted position; but they will be moved to extended position whenever the shipping container is to be restrained by a securing system which is intended to receive and restrain pallet-type loads. It is, therefore, an object of the present invention to provide a shipping container which has selectively extendable and retractible spacers secured to the base thereof.

Other and further objects and advantages of the present invention should become apparent from an examination of the drawing and accompanying description.

In the drawing and accompanying description a preferred embodiment of the present invention is shown and described but it is to be understood that the drawing and accompanying description are for the purpose of illustration only and do not limit the invention and that the invention will be defined by the appended claims.

BRIEF DESCRIPTION OF THE DRAWING

In the drawing, FIG. **1** is a plan view of one preferred embodiment of collapsible shipping container that is made in accordance with the principles and teachings of the present invention,

FIG. **2** is a side elevational view of the collapsible shipping container of FIG. **1**, and it shows that container in its erected position,

FIG. **3** is a broken elevational view, on a larger scale, of the right-hand end of the collapsible shipping container of FIGS. **1** and **2**, and it is taken along the plane indicated by the line **3—3** in FIG. **2**,

FIG. **4** is a sectional view, on the scale of FIG. **3**, through the collapsible shipping container of FIGS. **1** and **2**, and it is taken along the plane indicated by the line **4—4** in FIG. **3**,

FIG. 5 is a sectional view, on the scale of FIG. 3, through part of the collapsible shipping container of FIGS. 1 and 2, and it is taken along the plane indicated by the line 5—5 in FIG. 3,

FIG. 6 is a sectional view, on the scale of FIG. 3, through another portion of the collapsible shipping container of FIGS. 1 and 2, and it is taken along the plane indicated by the line 6—6 in FIG. 3,

FIG. 7 is a sectional view, on the scale of FIG. 3, through a further portion of the collapsible shipping container of FIGS. 1 and 2, and it is taken along the plane indicatd by the line 7—7 in FIG. 3,

FIG. 8 is a broken sectional view, on the scale of FIG. 3, through a still further portion of the collapsible shipping container of FIGS. 1 and 2, and it is taken along the plane indicated by the line 8—8 in FIG. 2,

FIG. 9 is a broken sectional view, on the scale of FIG. 3, through yet another portion of the collapsible shipping container of FIGS. 1 and 2, and it is taken along the plane indicated by the line 9—9 in FIG. 3,

FIG. 10 is a broken sectional view, on the scale 0f FIG. 3, through an additinal portion of the collapsible shipping container of FIGS. 1 and 2, and it is taken along the plane indicated by the line 10—10 in FIG. 3,

FIG. 11 is an elevational view, on a scale intermediate those of FIGS. 1 and 3, of the right-hand end of the collapsible shipping container of FIG. 1 and 2, and it shows that collapsible shipping container in a position intermediate its fully-erected and fully-collapsed positions,

FIG. 12 is an elevational view on the scale of FIG. 11, of the right-hand end of the collapsible shipping container of FIGS. 1 and 2, and it shows that collapsible shipping container in its fully-collapsed position,

FIG. 13 is an elevational view that is generally similar to FIG. 2, but it is broken, it is on a scale intermediate those of FIGS. 3 and 11, and it shows the collapsible shipping container in its fully-collasped position,

FIG. 14 is a sectional view, on a scale twice that of FIG. 4, through a portion of one side of an alternate form of base for the collapsible shipping container of FIGS. 1 and 2, and it is taken along the plane indicated by the line 14—14 in FIG. 2,

FIG. 15 is a sectional view of a portion of the left-hand wall and of a portion of the top of the collapsible shipping container, and it is taken along the plane indicated by the line 15—15 in FIG. 1, and

FIG. 16 is a broken, sectional view of portions of the right-hand wall and of portions of the top and base, and it is taken along the plane indicated by the line 16—16 in FIG. 1.

DESCRIPTION OF PREFERRED EMBODIMENT OF INVENTION

Referring to the drawing in detail, the numeral 20 denotes the base of one preferred embodiment of collapsible shipping container that is made in accordance with the principles and teachings of the present invention; and the upper surface of that base acts as a floor on which cargo can be set. As indicated by FIGS. 2, 9, 10 and 13, that base can be made with a honeycomb or eggcrate core to reduce the overall weight thereof. That base has generally-rectangular, generally-horizontal sockets 21 therein adjacent the center of one side thereof to receive the tines of a fork-lift truck. Similar sockets, not shown, are provided in the opposite side of the base 20.

A sturdy flange 22 extends upwardly from, and above the level of, the upper surface of the base 20 adjacent the right-hand side of that base, as that base is viewed in FIGS. 3, 11 and 12. Part of the upper surface of that flange is concave, and the rest of that upper surface defines a horizontally-extending groove 25, as shown particularly by FIG. 16. Sturdy plates 23 are located at the opposite ends of the flange 22, as indicated by FIG. 2; and the upper ends of those plates extending upwardly above the level of the upper surface of that flange. Each of those plates has an opening in the upwardly-extending portion thereof; and those openings define the axis of generation of the concave part of the upper surface of the flange 22 and of the lower surface of the groove 25. That axis of generation is denoted by the numeral 47 in FIG. 16. The groove 25 is adjacent, and opens to, the right-hand side of the flange 22.

The numeral 24 denotes a groove which is formed in the right-hand end of the base 20, as that base is viewed in FIG. 9. That groove is parallel to the upper and lower surfaces of that base; but it is spaced just a short distance below the level of that upper surface. The numeral 26 denotes a similar groove which is formed in the left-hand end of the base 20, as that base is viewed in FIG. 9. The groove 24 is generally T-shaped in cross section; and the groove 26 is a mirror image of the groove 24.

A shallow flange 45 extends upwardly from, and above the level of, the upper surface of the base 20 adjacent the left-hand side of the base, as that base is viewed in FIG. 3. A horizontally-directed groove 28 is provided in the right-hand side of the flange 45; and the open side of that groove confronts the inner face of the flange 22 at the right-hand side of that base. The groove 28 extends from one end of the base 20 to the other end of that base. The numeral 34 denotes corner fittings for the base 20; and each of the four corners of that base has a corner fitting 34 secured to it. Those corner fittings can be of standard and usual design; and they have openings in the sides and bottoms thereof to accommodate the hooks of lifting slings or to accomodate the clamps of fastening devices. Each corner of the base 20 has sockets in register with the openings in the corner fitting 34 which is secured to that corner. If desired, the base 20 could be equipped with tie-down rings, not shown of standard and usual design.

The numeral 30 denotes the top of the collapsible shipping container provided by the present invention; and that top preferably has a length and a width that are the same as the length and width of the base 20. Although the top 30 is shown as being essentially solid, it could be made with a honeycomb or eggcrate core to reduce the overall weight thereof. The edges of the top 30 depend downwardly below the lower surface of the central portion of that top, as shown by FIG. 4. Sturdy L-shaped plates 41 are locatd at the opposite ends of the left-hand side of the top 30, as that top is viewed in FIGS. 3, 11 and 12. The L-shaped plate 41 in FIGS. 3, 11 and 12 is shown as being a part of a corner fitting 39 for the top 30; but that L-shaped plate could be made as a separate element which could have the upper end thereof set inside of, or bolted to the outer face of, that corner fitting. The foot of the L-shaped plate 41 has an opening therein which receives a pivot 44, as shown by FIG. 3. The foot of the L-shaped plate 41, not

shown, at the other end of the top **30** also has an opening with a pivot therein; and those pivots are coaxial. The numeral **32** denotes a horizontally-directed groove in the lower face of the left-hand downwardly-depending edge of the top **30**, as that top is viewed in FIG. **3**. The upper surface of that groove will preferably be arcuate, and it will preferably have the axis of the pivot **44** as the axis of generation thereof. That groove opens to to the outer face of the left-hand downwardly-depending edge of the top **30**, as that top is viewed in FIG. **3**. The numeral **55** denotes a horizontally-directed groove in the lower face of the right-hand downwardly-depending edge of the top **30**, as that top is viewed in FIGS. **3** and **16**. That groove opens to the interior of the top **30**, as shown by FIG. **16**.

The numeral **36** denotes a groove which is provided in the inner face of the downwardly-depending edge at the right-hand end of the top **30**, as that top is viewed in FIG. **4**. The open side of that groove faces inwardly of the top **30**; and that groove extends from the right-hand side of that top to a point of termination short of the left-hand side of that top, as that top is viewed in FIGS. **3**, **11** and **12**. A similar groove **38** is provided at the inner face of the downwardly-depending edge at the left-hand end of the top **30** as that top is viewed in FIG. **4**. The groove **38** is a mirror image of the groove **36**.

As shown by FIGS. **3**, **11** and **12**, the groove **24** extends from the left-hand side of the base **20** to a point of termination short of the right-hand side of the base, whereas the groove **36** extends from the right-hand side of the top to a point of termination short of the left-hand side of that top. As shown by FIG. **3**, the horizontally-directed groove **25** is adjacent the right-hand side of the base **20**, whereas the horizontally-directed groove **55** is adajcent the right-hand side of the top. Similarly, the groove **26** extends from the left-hand side of the base **20** to a point of termination short of the right-hand side of that base, whereas the groove **38** extends from the right-hand side of the top **30** to a point of termination short of the left-hand side of that top.

The numerals **27**, **29**, **31** and **40** denote generally U-shaped elements which are pivoted to the upper surface of the top **30**. As shown particularly by FIG. **1**, those U-shaped elements are located adjacent the right-hand end of that top. Ordinarily, the U-shaped elements **27**, **29**, **31** and **40** will lie flat against the upper surface of the top **30**, as indicated by FIGS. **1**, **12** and **13**. However, whenever it is desirable to use those U-shaped elements to receive the tines of fork-lift trucks, those U-shaped elements will be rotated into positions which are at ninety degrees to the upper surface of that top. The U-shaped elements **31** and **40** are located opposite, and some distance to the left of, the U-shaped elements **27** and **29**; and pivoted rods **43** connect the U-shaped element **40** to the u-shaped element **29**, while further pivoted rods **43** connect the U-shaped element **31** to the U-shaped element **27**. Those pivoted rods cause the U-shaped elements **40** and **29** to move as a unit, and also cause the U-shaped elements **31** and **27** to move as a unit. When the U-shaped elements **27**, **29**, **31** and **40** are set in the dotted-line upright positions shown by FIGS. **2** and **11**, they can accommodate the tines of a fork lift truck.

In addition to the corner fitting **39**, the top **30** has corner fittings **33**, **35** and **37**; and those four corner fittings are located at the four corners of the top **30**, as shown by FIG. **1**. Those corner fittings can be of standard and usual design; and they all have openings in the sides and tops thereof to accommodate the hooks of lifting slings or to accommodate the clamps of fastening devices. Each corner of the top **30** has sockets in register with the openings in the corner fitting which is secured to that corner.

The numeral **42** denotes the left-hand side wall of the collapsible shipping container provided by the present invention, as that container is viewed in FIG. **3**. Although that wall is shown as being essentially solid, it could be made with a honeycomb or eggcrate core to reduce the overall weight thereof. Plates **57** are secured to the opposite ends of the wall **42** at points which are spaced short distances below the upper edges of that wall; and those plates extend inwardly of that wall, as indicated by FIGS. **3** and **7**. The inner ends of those plates have openings therein which receive the pivots **44** that are secured to the feet of the L-shaped plates **41**; and hence the plates **57**, the pivots **44** and the L-shaped plates **41** constitute hinges for the wall **42**. Because the pivots **44** are located inwardly of the wall **42**, the upper edge of that wall will not project inwardly beyond the left-hand side of the top **30** when that wall is pivoted toward, and finally into, parallel relation with that top, as shown by FIGS. **11** and **12**.

A generally-triangular bracket **46** is pivotally secured to one end of the wall **42**, adajcent the lower edge of that wall, by a screw **49**, as shown particularly by FIG. **3**. That bracket has rollers **48** mounted thereon by anti-friction bearings; and, as shown particularly by FIGS. **3** and **10**, those rollers are disposed within the groove **24** in the base **20**. The diameters of those rollers will be just slightly smaller than the vertical dimension of that groove; and hence those rollers will receive full support from the upper and lower surfaces of that groove but will be able to roll freely within that groove. The numeral **50** denotes a generally-triangular bracket which is similar to the bracket **48**; but the bracket **50** is pivotally secured to the opposite end of the wall **42**, adjacent the lower edge of that wall, by a screw **51**. Rollers **52** are mounted on the bracket **50** by anti-friction bearings; and, as shwon particularly by FIG. **10**, the rollers **52** are disposed within the groove **26** in the base **20**. The diameters of those rollers will be just slightly smaller than the vertical dimension of that groove; and hence those rollers will receive full support from the upper and lower surfaces of the groove but will be free to roll freely within that groove.

The numeral **53** denotes a rib which is provided at the lower surface of the wall **42**, as that wall is viewed in FIGS. **3** and **14**. That rib extends along the full length of that lower edge; and it is dimensioned to fit within the groove **28** at the left-hand side of the base **20**, as that base is viewed in FIG. **3** and **11**. The rib **53** will extend into the groove **28** whenever the collapsible shipping container is in its fully erected position; and it will coact with that groove to stiffen the base **20** and to provide a tensile joint between that base and the wall **42**. The rib **53** and the groove **28** also will coact to provide a closed joint between the wall **42** and the base **20**; and, because both that rib and that groove are tapered, that joint can be watertight.

The numeral **54** denotes a strap which has the lower end thereof pivotally secured to the base **20** by a hinge **58**, and which has the upper end thereof pivotally secured to the outer surface of the wall **42** by a hinge **56**,

all as shown by FIG. 3. As indicated particularly by FIG. 2, the strap 54 has a length, between the axes of the hinges 56 and 58, which is approximately one-half of the height of the wall 42 and which is substantially equal to the distance between the axis of the hinge 56 and the axis of the screw 49, as shown by FIG. 11. The numerals 60 and 66 denote straps which are identical to the strap 54; and the upper end of the strap 60 is pivotally secured to the outer surface of the wall 42 by a hinge 62 while the lower end of that strap is pivotally secured to the base 20 by a hinge 64. Similarly, the upper end of the strap 66 is pivotally secured to the outer surface of the wall 42 by a hinge 68, while the lower end of that strap is pivotally secured to the base 20 by a hinge 70. As shown particularly by FIG. 2, the strap 54 is spaced a short distance to the left of the right-hand end of the collapsible shipping container the strap 66 is disposed a short distance to the right of the left-hand end of that container, and the strap 60 is located approximately midway between the opposite ends of that container. The axes of the hinges 56, 62 and 68 define a line which is parallel to, but is spaced well above, the upper surface of the base 20; and the axes of the hinges 58, 64 and 70 define a line which is parallel to, and immediately adjacent, that upper surface.

A rib 71 is provided on the upper edge of the wall 42, as shown by FIGS. 3 and 15; and that rib extends along the entire length of that upper edge. The upper surface of that rib will preferably be arcuate, and it will preferably have the axis of the pivot 44 as the axis of generation thereof. That rib will extend into the groove 32 whenever the collapsible shipping container is in its fully errected position; and it will coact with that groove to stiffen the top 30 and the wall 42, and to provide a tensile joint between that top and that wall. The rib 71 and the groove 32 also will coact to provide a closed joint between the wall 42 and the top 30; and, because both that rib and that groove are tapered, that joint can be watertight.

The numeral 82 denotes the right-hand side wall of the collapsible shipping container provided by the present invention, as that container is viewed in FIG. 3. Although that wall is shown as being essentially solid, it could be made with a honeycomb or eggcrate core to reduce the overall weight thereof. Screws 84 extend through the openings in the upwardly-extending portions of the ears 23, at the opposite ends of the flange 22 on the base 20, and into the opposite ends of the wall 82. Those screws are adjacent the lower edge of the wall 82, they lie on the axis of generation 47 shown in FIG. 16, and they enable that wall to pivot relative to the base 20.

A generally-triangular bracket 86 has a portion thereof extending downwardly into a shallow, transversely-directed slot in the upper edge of the wall 82; and that slot is close to the right-hand end of that wall, as that wall is viewed in FIG. 4. A pin 87 extends inwarldy through the right-hand end of the wall 82, through that slot, and through that portion of the bracket 86 to pivotally secure that bracket to that wall. The bracket 86 has rollers 88 mounted thereon by anti-friction bearings; and, as shown particularly by FIG. 4, those rollers are disposed within the groove 36 of the top 30. The diameters of those rollers will be just slightly smaller than the vertical dimension of that groove; and hence those rollers will receive full support from the upper and lower surfaces of that groove but will be able to roll freely within that groove. The numeral 92 denotes a generally-triangular bracket which is similar to the bracket 86; and a portion of that bracket extends downwardly into a shallow, transversely-directed slot in the upper edge of the wall 82; and that slot is close to the left-hand end of that wall, as that wall is viewed in FIG. 4. A pin 93 extends inwardly through the left-hand end of the wall 82, through that slot, and through that portion of the bracket 92 to pivotally secure that bracket to that wall. Rollers 94 are mountd on the bracket 92 by anti-friction bearings; and, as shown particularly by FIG. 4, those rollers are disposed within the groove 38 in the top 30. The diameters of those rollers will be just slightly smaller than the vertical dimensions of that groove; and hence those rollers will receive full support from the upper and lower surfaces of that groove but will be free to roll freely within that groove.

The grooves 36 and 38 are formed in the inner surfaces of the downwardly-depending edges at the opposite ends of the top 30, as shown by FIG. 4. As a result, those downwardly-depending edges serve to conceal and protect the groove 38, the bracket 92 and the rollers 94 while also serving to conceal and protect the groove 36, the bracket 86 and the rollers 88.

The numeral 90 denotes a rib which is provided at the upper edge of the wall 82, as shown by FIGS. 3 and 16. That rib extends along the entire length of that upper edge; and it is dimensioned to fit within the groove 55 in the downwardly-depending edge at the right-hand side of the top 30, as that top is viewed in FIGS. 3 an 16. The rib 90 will extend into the groove 55 whenever the collapsible shipping container is in its fully erected position; and it will coact with that groove to stiffen the top 30 and the wall 82 and to provide a tensile joint between that top and that wall. The rib 90 and the groove 55 also will coact to provide a closed joint between the wall 82 and the top 30; and, because both that rib and that groove are tapered, that joint can be water-tight.

The numeral 91 denotes a rib which is provided at the lower edge of the wall 82, and shown by FIGS. 3 and 16. That rib extends along the entire length of that lower edge; and it is dimensioned to fit within the groove 25 in the flange 22 on the base 20. The lower edge of that rib will preferably be arcuate, and it will preferably have the axis of generation 47 as the axis of generation thereof. That rib will extend into the groove 25 whenever the collapsible shipping container is in its fully erected positon; and it will coact with that groove to stiffen the wall 82 and to provide a tensile joint between that wall and the base 20. The rib 91 and the groove 25 also will coact to provide a closed joint between the wall 82 and the base 20; and, because both that rib and that groove are tapered, that joint can be water-tight.

The wall 82 is very similar to the wall 42. However, the lower edge of the wall 82 is pivotally secured to the flange 22 on the base 20 by means of the plates 23, whereas the upper edge of the wall 42 is pivotally secured to the downwardly-depending left-hand edge of the top 30 by means of the plates 57 and the L-shaped plates 41. The lower edge of the wall 42 can move laterally of the base 20 because of the brackets 46 and 50, the rollers 48 and 52, and the grooves 24 and 26, whereas the upper edge of the wall 82 can move later-

ally of the top **30** because of the brackets **86** and **92**, the rollers **88** and **94**, and the grooves **36** and **38**.

The numeral **72** denotes a strap which has the upper end thereof pivotally secured to the top **30** by a hinge **74**, and which has the lower end thereof pivotally secured to the outer surface of the wall **82** by a hinge **76**. As indicated particularly by FIG. **11**, tje strap **72** has a length, between the axes of the hinges **74** and **76**, which is approximately one-half of the height of the wall **82** and which is substantially equal to the distance between the axis of the hinge **76** and the pin **87**, as shown by FIG. **11**. The numerals **78** and **80** denote straps which are identical to the strap **72**; and the upper ends of those straps are secured to the top **30** by suitable hinges **79** and **81**. The lower ends of the straps **78** and **80** are suitably secured to the outer surface of the wall **82** by hinges **89** and **97**. The axes of the hinges **76**, **89** and **97** define a line which is parallel to, but is spaced well below, the downwardly-depending right-hand edge of the top **30**; and the axes of the hinges **74**, **79** and **81** define a line which is parallel to, and immediately adjacent, that edge.

As indicated particularly by FIGS. **1** and **2**, the strap **78** is approximately midway between the ends of the collapsible shipping container, the strap **72** is spaced a short distance to the left of the right-hand end of that container, and the strap **80** is spaced a short distance to the right of the left-hand end of that container. As indicated by FIGS. **2** and **11**, the straps **72**, **78** and **80** depend downwardly from one side of the top **30**, whereas the straps **54**, **60** and **66** extend upwardly from the opposite side of the base **20**.

The numeral **96** denotes a closure which is rectangular in elevation; and that closure is disposed adjacent the left-hand end of the collapsible shipping container, as that collapsible shipping container is viewed in FIGS. **1** and **2**. That closure has a width which is just slightly smaller than the distance between the walls **42** and **82**, and it has a height which is just slightly shorter than the height of the wall **42** — as shown by FIGS. **1–3**. A hinge **98** of standard and usual design, which is shown as being continuous but which could be constituted by a number of short vertically-spaced hinges, secures one edge of the closure **96** to the left-hand end of the wall **42**, as that wall is viewed in FIGS. **1** and **2**. That hinge permits that closure to be rotated from a position wherein that closure is at right angles to the wall **42** to a position wherein that closure abuts the inner face of that wall; and both of those positions are indicated in FIG. **1**.

A slide bolt **100** is carried by the closure **96**, as indicated by FIGS. **4** and **8**; and that slide bolt is adjacent the free edge of that closure. That slide bolt can have the outer end thereof disposed within a socket **102** in the inner surface of the wall **82** to hold the closure **96** in position wherein it closes the left-hand end of the collapsible shipping container — as that container is viewed in FIGS. **1** and **2**. The solid lines in FIG. **8** indicate the positon of the slide bolt **100** when the outer end thereof is disposed within the socket **102**; and the dotted lines in FIG. **8** indicate the positon of the slide bolt when the outer end thereof is free of that socket. Additional slide bolts, not shown, can be provided adjacent the free edge of the closure **96**, and additional sockets, not shown, can be provided in the inner surface of the wall **82** to accomodate the outer ends of those additional slide bolts. Those additional slide bolts and those additional sockets will coact with slide bolt **100** and socket **102** to releasably hold the free edge of the closure **96** in closed position. A suitable fastener, not shown, can be provided at the inner surface of the wall **42** to engage the free edge of the closure **96** whenever that closure is rotated into face-to-face engagement with that inner surface. That fastener will releasably hold that closure in that face-to-face engagement, and thus will facilitate collapsing of the collapsible shipping container.

Resilient sealing strips **101**, shown in FIGS. **4**, **8**, **9** and **10**, are disposed within grooves provided in all four edges of the closure **96**. Those sealing strips are plano-convex in cross section; and the convex surfaces thereof project outwardly beyond those four edges to engage the upper surface of the base **20**, the inner surfaces of the walls **42** and **82**, and the lower surface of the downwardly-depending edge at the left-hand end of the top **30**, as that top is viewed in FIG. **4**. The engagements between the convex surfaces of the sealing strips **101** and the upper surface of the base **20**, the inner surfaces of the walls **42** and **82**, and the lower surface of the downwardly-depending edge at the left-hand end of the top **30** will be sufficiently intimate to prevent the entry of rain, sleet snow, dust and the like but will not be so tight as to prevent movement of the closure **96** relative to the base **20**, the top **30** or the walls **42** and **82**.

The numeral **104** denotes a door which is rectangular in elevation; and that door is disposed adjacent the right-hand end of the collapsible shipping container, as that collapsible shipping container is viewed in FIGS. **1** and **2**. That door has a width which is just slightly smaller than the distance between the walls **42** and **82**, and it has a height which is just slightly shorter than the height of the wall **42**. Hinges **106** rotatably secure one edge of the door **104** to the right-hand end of the wall **42**, as that wall is viewed in FIGS. **1** and **2**. Those hinges include flat plates which are disposed within slots **105** in the end of the wall **42** and slots **107** in the end of the door **104**, and also include pins which span those slots. Those hinges permit that door to be rotated from a position wherein it abuts the outer surface of the wall **42**, to and through a position wherein it is at right angles to that wall, and then to a position wherein it abuts the inner surface of that wall. The position wherein the door **104** abuts the outer surface of the wall **42** is shown by dotted lines at the left of FIG. **7**, the position wherein that door is at right angles to that wall is shown by solid lines at the top of FIG. **7**, and the position wherein that door abuts the inner surface of that wall is shown by dotted lines at the right of FIG. **7**. The hinges **106** permit the door **104** to rotate almost three hundred and sixty degrees from the left-hand dotted-line position to the right-hand dotted-line position in FIG. **7**.

As shown particularly by FIG. **7**, the edge of the door which is held by the hinges **106** is generally triangular in cross section, and the adjacent end of the wall **42** has rounded edges. That generally-triangular edge coacts with those rounded edges to permit unimpeded movement of that door between the two dotted-line positions shown in FIG. **7**. Resilient sealing strips **117**, shown in FIGS. **4**, **6**, **9** and **10**, are disposed within grooves provided in the upper and lower edges and in the free edge of the door **104**; and a similar resilient sealing strip, not shown, is disposed within a groove in the generally-

triangular edge of that door. Those sealing strips are plano-covex in cross section; and the convex surfaces thereof project outwardly beyond the edges of the door **104** to engage the upper surface of the base **20**, the inner surfaces of the walls **42** and **82**, and the lower surface of the downwardly-depending edge at the right-hand end of the top **30**, as that top is viewed in FIG. **4**. The engagements between the convex surfaces of the sealing strips **117** and the upper surface of the base **20**, the inner surfaces of the walls **42** and **82**, and the lower surface of the downwardly-depending edge at the right-hand end of the top **30** will be sufficiently intimate to prevent the entry of rain, sleet, snow, dust and the like but will not be so tight as to prevent movement of the door **104** relative to the base **20**, the top **30** or the walls **42** and **82**.

Whenever the door **104** is in the solid-line position of FIG. **7**, that door will close the right-hand end of the collapsible shipping container, as that container is viewed in FIGS. **1** and **2**. Whenever that door is in the left-hand dotted-line postion of FIG. **7**, it exposes the entire right-hand end of the collapsible shipping container, and thereby facilitates ready loading and unloading of that container. Whenever that door is in the right-hand dotted-line position of FIG. **7**, it facilitates collapsing of the collapsible shipping container.

The numeral **108** denotes two locking bars which are mounted within the door **104**, as indicated particularly by FIGS. **3**, **5** and **6**. Actually, three such locking bars will be used, and the third locking bar, not shown, will be located approximately midway between the two locking bars shown in FIG. **3**. Each locking bar **108** has a handle **110** which normally is disposed within a rectangular recess **111** in the outer surface of the door **104**. The locking bar **108** has hook-type latches **112** at the top and bottom thereof; and those latches are disposed within recesses **113** in the upper and lower surfaces of the door **104**. Locking pins **114** are mounted on the base **20** so they extend up into the lower recesses **113** whenever the door **104** is in the solid-line positon shown by FIG. **7**. Similarly, locking pins **114** are mounted on the top **30** so they extend down into the upper recesses **113** whenever the door **104** is in the solid-line position of FIG. **7**. When the door **104** is in the solid-line position of FIG. **7** and the handles **110** of the locking bars **108** are within the recesses **111**, the latches **112** at the tops and bottoms of those locking bars will be in locking engagement with the locking pins **114**. At such time, those locking bars will hold that door in that solid-line position. However, when the handles **110** of the locking bars **108** are rotated outwardly of the recesses **111** in the door **104**, the latches **112** will move out of engagement with the locking pins **114**, and thereby will not obstruct opening movement of the door.

A suitable fastener, not shown, can be provided at the inner surface of the wall **42** to engage the free edge of the door **104** whenever that door is rotated into face-to-face engagement with that inner surface. That fastener will releasably hold that door in that face-to-face engagement, and thus will facilitate collapsing of the collapsible shipping container.

Whenever the collapsible shipping container is in its erected position, with the closure **96** and the door **104** locked, that closure and that door will help keep the rib **53** on the inner edge of the wall **42** in position within the groove **28** on the base **20** for a considerable distance from either end of that base. However, to make sure that the rib **53** will remain in position within the groove **28**, throughout the length of that groove, a locking pin **103** is provided, as shown by FIG. **14**. That pin **103** has a wrench-receiving head, a threaded shank, and generally-conical lower end. That pin is confined and guided by an internally-threaded quide **116** which is fixedly secured to the inner face of the wall **42** about midway between the ends of that wall. When the generally-conical lower end of the pin **103** is moved down into a generally-conical socket **118** in the base, that generally-conical lower-end will coact with that generally-conical socket to force the rib **53** into, and thereafter will hold that rib within, the groove **28**. In this way, the tensile joint, provided by the rib **53** and the groove **28**, can be maintained through the full length of the base.

A threaded pin **109** is confined and guided by a threaded socket **115** which is located in the upper edge of the wall **82** about midway between the ends of that wall. A recess **119** in the inner face of the wall **82** communicates with the socket **115**, as shown by FIG. **16**; and it accommodates a nut **121** which encircles the shank of the pin **109**. The recess **119** is long enough and wide enough to enable a wrench to engage and rotate the nut **121**, and thus drive the pin **109** upwardly or downwardly. The upper end of that pin is generally-conical and it can be moved up into a generally-conical socket **123**, in the bottom of the downwardly-depending edge at the right-hand end of the top **30**, to force the rib **90** on the upper edge of the wall **82** into the groove **55** in that downwardly-depending edge. The pin **109** and the socket **124** can coact with the closure **96** and the door **104** to hold the rib **90** within the groove **55** throughout the length of that groove; and thus can maintain the tensile joint, provided by that rib and groove, through the full length of the wall **82**.

Whenever the collapsible shipping container is in the erected position indicated by FIGS. **2** and **3**, the walls **42** and **82** will be dispoed at right angles to the planes of the base **20** and of the top **30**. The rib **53** at the lower edge of the wall **42** will be disposed within the groove **28** of the base **20**, and the rib **71** at the upper edge of that wall will be disposed within the groove **32** of the top **30**. The rib **90** at the upper edge of the wall **82** will be disposed within the groove **55** of the top **30**, and the rib **91** at the lower edge of that wall will be disposed within the groove **25** of the base **20**. Those ribs and grooves will provide water-tight, tensile joints along the upper and lower edges of both of the walls **42** and **82**. The closure **96** will be disposed at right angles to the walls **42** and **82**, as indicated by FIGS. **8–10**; and the resilient sealing strips **101** will coact, respectively, with the top **30**, the base **20**, and the walls **42** and **82** to provide tight joints. Also, the slide bolts **100** will have the outer ends thereof extending into the sockets **102** to fixedly hold the closure **96** in position to close the left-hand end of the collapsible shipping container. The door **104** may be disposed at right angles to the walls **42** and **82**, as indicated by FIGS. **6** and **7**; and, in such event, the hook-type latches **112** at the tops and bottoms of the three locking bars **108** will be in locking engagement with the locking pins **114** therefor. At such time, the resilient sealing strips **117** adjacent the upper, lower and side edges of that door will coact, respectively, with the top **30**, the base **20** and the sides **42** and **82** to provide tight joints. The closure **96** and the door

104 will, when in those positions, act as structural elements, and will help maintain the collapsible shipping container in its erected position.

To empty or fill the collapsible shipping container, the locking bars **108** will have the handles **110** thereof moved outwardly of the recessess **111** therefor in the outer surface of the door **104.** Thereafter, that door will be rotated from the solid-line position to the left-hand dotted-line position of FIG. **7.** In the latter position, the door **104** will completely expose the interior of the collapsible shipping container, and thus will not obstruct any movement of objects into or out of that container. After the collapsible shipping container has been loaded, the door **104** will be rotated from its left-hand dotted-line position to the solid-line position of FIG. **7,** and then the three locking bars **108** will be actuated to lock that door in its container-closing position.

The collapsible shipping container can be bodily lifted by inserting the tines of a fork lift truck in the sockets **21** in either side of the base **20.** Also, that collapsible shipping container can be bodily lifted by inserting the hooks of a lifting sling within the openings in the corner fittings **33, 35, 37** and **39** on the top **30** or within the openings in the corner fittings **34** on the base **20.** The top **30** and the walls **42** and **82** of the collapsible shipping container can be raised, whenever that collapsible shipping container is to be erected, by rotating the U-shaped elements **27, 29, 31** and **40** so they are at right angles to the upper surface of the top **30,** and by passing the tines of a fork lift truck through each pair of U-shaped elements. If desired, the top **30** and the walls **42** and **82** of the collapsible shipping container can be raised, whenever that collapsible shipping container is to be erected, by inserting the hooks of lifting slings within the openings in the corner fittings **33, 35, 37** and **39** on the top **30** of that container.

To collapse the collapsible shipping container, the hooks at the ends of lifting slings can be connected to the corner fittings **33, 35, 37** and **39** on the roof **30** of that container, and then a suitable crane, boom or fixed overhead hoist can be used to develop sufficient tension within those lifting slings to support the weight of the top **30** and walls **42** and **82** of the collapsible shipping container. Thereupon, the locking bars **108** can be actuated to release the hook-type latches **112** at the upper and lower ends thereof from the locking pins **114** in the top **30** and base **20.** The door **104** can then be rotated into the right-hand dotted-line position in FIG. **7** — so that door will be in face-to-face abutting engagement with the inner surface of the wall **42.** The fastener, not shown, at the inner surface of the wall **42** will then be actuated to hold the door **104** in that dotted-line position. Immediately thereafter, the slide bolts **100** will be moved to retracted position to permit the closure **96** to be rotated into face-to-face abutting engagement with the inner surface of the wall **42;** and then the other fastener at the inner surface of that wall will be actuated to hold that closure in such face-to-face engagement. The locking pin **103** at the lower, inside, midpoint of the wall **42,** and the locking pin **109** at the upper, inside, midpoint of the wall **82** will then be released from engagement with the sockets therefor in the base **20** and top **30,** respectively.

At this time, a laterally-directed, inwardly-acting force will be applied to the right-hand end of the wall **42** adjacent the lower surface of that end; and that force will tend to cause the bracket **46** to move from the position indicated by FIG. **3** toward the position shown by FIG. **12.** Successively, laterally-directed inwardly-acting forces will be applied to the left-hand end of the wall **42** adjacent the lower surface of that end, to the right-hand end of the wall **82** adjacent the upper surface of that end, and to the left-hand end of the wall **82** adjacent the upper surface of that end. The laterally-directed inwardly-acting force at the left-hand end of the wall **42** will cause the bracket **50** to move toward the flange **22** on the base **20;** and the laterally-directed inwardly-acting forces at the ends of the wall **82** will cause the brackets **86** and **92** to move toward the downwardly-depending edge at the opposite side of the top **30.** The four laterally-directed, inwardly-acting forces will start the walls **42** and **82** moving toward the inclined positions shown by FIG. **11.** As those walls move toward those positions, they will permit the top **30** to respond to gravity to move downwardly toward the base **20;** and the crane, boom or fixed overhead hoist will be appropriately actuated to provide controlled downward movement of that top toward that base. That controlled downward movement will be continued until the top **30** and the walls **42** and **82** move to the positions shown by FIG. **12.** When the top **30** and the walls **42** and **82** reach the fully-retracted positions shown by FIG. **12,** the straps **54, 60** and **66** will be resting upon the upper surface of the base **20,** the left-hand portion of the wall **42** will be resting upon the straps **54, 60** and **66;** the closure **96** and the door **104** will be resting upon the wall **42;** the wall **82** will be resting upon the closure **96** and the door **104,** and the straps **72, 78** and **80** will be resting upon the wall **82.** At such time, the upper surface of the top **30** will be parallel to the bottom surface of the base **20,** and the height of the container will be reduced by about eighty-two percent.

If desired, a fork lift truck could be used, instead of a crane, boom or fixed overhead hoist, to support the top **30** and the walls **42** and **82** during the collapsing of the collapsible shipping container. The tines of that fork lift truck would extend through and hold aligned pairs of the U-shaped elements **27** and **31** and **29** and **40** on the top **30.**

To shift the collapsible shipping container from its fully-collapsed to its fully-erected position, a crane, boom, fixed overhead hoist or a fork lift truck can be used to apply upwardly-directed forces to the top **30.** As that top responds to those forces to move upwardly relative to the base **20,** it will apply upwardly-directed forces to the upper edge of the wall **42** via the pins **44** and to the upper edge of the wall **82** via the brackets **86** and **92.** The wall **42** will respond to the upwardly-directed force which is applied to it to cause the lower edge thereof to move from the position shown by FIG. **12** to and through the position of FIG. **11** toward the position shown by FIG. **3.** Similarly, the wall **82** will respond to the upwardly-directed force which is applied to it to cause the upper edge thereof to move from the position indicated by FIG. **12** to and through the position of FIG. **11** toward the position shown by FIG. **3.** As the walls **42** and **82** approach the positions shown by FIG. **3,** the operator will force the rib **53,** adjacent the lower edge of the wall **42,** into the groove **28,** and he will force the rib **90,** adjacent the upper edge of the wall **82,** into the groove **55.** Also, he will force the lower end of the pin **103** into the socket **118** in FIG. **14,**

and he will force the upper end of the pin **109** into the socket **123** in FIG. **16.** Thereafter, he will free the closure **96** from the fastener, not shown, at the inner surface of the wall **42,** and will then rotate that closure into position to close the left-hand end of the container, as that container is viewed in FIGS. **1** and **2.** Once the closure **96** has been moved into, and locked in, position to close the left-hand end of the collapsible shipping container, that container will be self-supporting; and the lifting forces provided by the crane, boom, fixed overhead hoist or the fork lift truck can be removed. Thereupon, the door **104** will be released from the fastener, not shown, at the inner surface of the wall **42** and will be rotated from the right-hand dotted-line position to the left-hand dotted-line position of FIG. **7.** At this time, the collapsible shipping container can be appropriately filled with objects to be shipped.

The straps **54, 60** and **66** confine the horizontally-directed center line of the wall **42** to a circular path which has the hinges **58, 64** and **70** as the center thereof. Similarly, the straps **72, 78** and **80** confine the horizontally-directed center line of the wall **82** to a circular path which has the hinges **74, 79** and **81** as the center thereof. The pins **44** confine the wall **42** for rotation relative to the top **30** through a fixed path; and the pins **84** confine the wall **82** for rotation relative to the base **20** through a fixed path. As a result, the straps **54, 60** and **66** coact with the straps **72, 78** and **80** and with the pins **44** and **84** to stabilize the collapsible shipping container as the walls **42** and **82** of that container are being shifted from the positions which they occupy when that container is in its fully-erected position to the positions which they occupy when that container is in its fully-retracted position, and vice versa. Those straps and those pins are particularly useful in preventing lateral shifting of the top **30** relative to the base **20** when the collapsible shipping container is intermediate its fully-erected and its fully-retracted positions; but they also prevent lateral shifting of that top relative to that base when the collapsible shipping container is in its fully-retracted position.

If desired, the straps **54, 60** and **66** and the straps **72, 78** and **80** could be eliminated if the device which was used to lift or lower the top **30** and the walls **42** and **82** was sufficiently stable to prevent lateral shifting of that top relative to that base. If a lifting sling were to be used to lift or lower the top **30** and the walls **42** and **82** of a collapsible shipping container that was not equipped with the straps **54, 60** and **66** and the straps **72, 78** and **80,** the apex of that lifting sling would be centered above the lateral center-line of that top. However, if a fork lift truck were to be used to lift or lower the top **30** and the walls **42** and **82** of such a collapsible shipping container, the insertion of the tines of that fork lift truck into the aligned U-shaped elements **27** and **31** and **29** and **40** would enable that fork lift truck to prevent lateral shifting of that top relative to the base **20.** When the container is in its fully-collapsed position, as shown by FIG. **12,** lateral movmenet of the top **30** to the right with respect to the base **20** will be restrained by the engagement of the rollers **48** and **52** against the inner ends of the grooves **24** and **26,** respectively, and the by the engagement of the rollers **88** and **94** against the inner ends of the grooves **36** and **38,** respectively. Lateral movement of the top **30** to the left in FIG. **12** with respect to the base **20** will be restrained by the engagement of the normally-upper edge of the wall **42** with the inner edge of the shallow flange **45** on the base **20.**

Referring particularly to FIG. **14,** the numeral **124** denotes an alternate form of base for the collapsible shipping container of FIGS. **1** and **2.** That base can be identical to the base **20** in all respects other than that it has recesses **126** which extend along both sides thereof. Those recesses will extend from the corner fittings **34** to the sockets **21,** and then similar recesses will extend between those sockets. Spacers **129,** which are as long as the recesses **126,** have the lower edges thereof pivotally secured to the base **124** by hinges **130.** As indicated particularly by FIG. **14,** each spacer **129** is dimensioned so it can be rotated up into the recess **126.** A folding connector **132** has one end thereof secured to the base **124** by a pivot **134,** and has the other end thereof secured to the spacer **129** by a pivot **136.** That folding connector is separated into two equal lengths by a pivot **135,** as indicated by FIG. **14.** Similar connectors with their hinge axes aligned horizontally, are located at intervals along the length of the base **20;** and sufficient numbers of those spacers will be used to adequately support the outer edges of the spacers **129** when those spacers are in their extended positions.

Whenever a collapsible shipping container, which utilizes the base **124,** is intended to be shipped in a space that is just slightly wider than that base, the spacers **129** will be set in the retracted positions indicated by solid lines in FIG. **14.** However, where that collapsible shipping container is to be shipped in a space which is wider than the base **124** by a distance approximately equal to twice the height of the spacer **129,** the two spacers **129** will be rotated outwardly to the dotted-line position of FIG. **14.** At such time, those spacers will abut appropriate structures in the conveyance in which the container is being shipped; and hence that container can be held solidly in position by appropriate restraint of the outer edges of the spacers **129** — although that container is substantially narrower than the distances between those structures.

Each of the spacers **129,** of the alternate form of base **124,** will preferably have a height of 6 inches. Where that is the case, the movement of those spacers to the extended positions indicated by dotted lines in FIG. **14** will enable the collapsible shipping to have a width that is compatible with the Air Force 463-L retention system which is installed in C5, C130 and C141 cargo aircraft.

The collapsible shipping container of the present invention can be made in different sizes. However, that container will preferably be made so it is eight feet wide, eight feet high and sixteen to twenty feet long. Such a collapsible shipping container can be collapsed into a space which is eight feet wide and sixteen to twenty feet long but is only sixteen and eight-tenths inches high. When the collapsible shipping container of the present invention is made with those dimensions, a total of six such containers can be stacked one above the other within the space limitations specified by the Department of Defense for air and surface transportation; and a total of five such containers can be stacked one above the other within the space limitations specified by industrial specifications for maritime shipping.

When five of the collapsible shipping containers are in their collapsed conditions and are stacked one above the other for maritime shipment, standard three-inch

interlocks, inserted between the corner fittings thereof, will be used to interrelate those containers so they will remain in stacked array and so they will have a total height equal to that of one fully-erected container.

The collapsible shipping container of the present invention can be made so it is both simple and rugged; because it essentially has only six relatively movable parts: the base **20**, the top **30**, the wall **42**, the wall **82**, the closure **96**, and the door **104**. Those six parts can be made of high strength aluminum alloys, using sheet metal reinforcement techniques, and hence the collapsible shipping container can be sturdy while being light in weight. The overall result is that the collapsible shipping container provided by the present invention can have a tare weight to cargo volume ratio of 2:1; and thus will be very usable in transporting cargo by air.

By using a crane and hoisting sling, one man is able to erect or to collapse the collapsible shipping container of the present invention. Moreover, he should be able to erect that collapsible shipping container, or to collapse that container, in five minutes or less.

The base **20** has a flat bottom; and hence that base makes it possible for the collapsible shipping container to slide along roller-type conveyors or across the roller-type floors of conveyances. As a result, that collapsible shipping container can easily be shifted into and out of position within warehouses and conveyances.

The rib **53** at the lower edge, and the rib **71** at the upper edge, of the wall **42** will, whenever they are disposed within the groove **28** of the base **20** and the groove **32** of the top **30**, respectively, act as mechanical connections between that wall and that base and top. Those mechanical connections will extend along the full length of that wall, that base and that top; and thus will enable that wall to keep the adjacent sides of that base and that top from bending appreciably when the collapsible shipping container is fully loaded and is suspended in air or is not resting solidly on a flat surface. Similarly, the rib **90** at the upper edge and the rib **91** at the lower edge of the wall **82**, will, whenever they are disposed within the groove **55** of the top **30** and the groove **25** of the flange **22**, respectively, act as mechanical connections between that wall and that top and base. Those mechanical connections will extend along the full length of that wall, that top and that base; and thus will enable that wall to keep the adjacent sides of that top and that base from bending appreciably. As a result, the collapsible shipping container can be very strong and sturdy even through it is made so it is light in weight and fully collapsible.

Not only do the grooves **28** and **55** coact with the ribs **53** and **90** to provide mechanical connections between the walls, the base and the top, but those grooves act as positive stops to outward movement of the upper and lower edges of those walls. As a result, an operator of the collapsible shipping container can not, through inadvertence or otherwise, cause excessive outward movement of the lower edge of the wall **42** or of the upper edge of the wall **82**. Moreover, the upper and lower edges of those walls are positively and uniformly restrained against outward movement in response to forces applied by surges of the cargo.

Whereas the drawing and accompanying description have shown and described a preferred embodiment of the present invention, it should be apparent to those skilled in the art that various changes may be made in the form of the invention without affecting the scope thereof.

What I claim is:

1. A collapsible shipping container which comprises a base, a top, a first side wall, a second side wall, means pivotally securing the upper edge of said first side wall to said top adjacent one side edge of said top, anti-friction elements attached to the lower edge of said first side wall, guides on said base that receive and guide said anti-friction elements and that permit said lower edge of said first side wall to move from one side edge of said base to the opposite side edge of said base and vice versa, said lower edge of said first side wall being adjacent said one side edge of said base whenever said container is in its erected position but being adjacent said opposite side edge of said base whenever said container is in its collapsed position, second means pivotally securing the lower edge of said second side wall to said opposite side edge of said base, further anti-friction elements attached to the upper edge of said second side wall, and further guides on said top that receive and guide said further anti-friction elements and that permit said upper edge of said second side wall to move from the opposite side edge of said top to said one side edge of said top and vice versa, said upper edge of said second side wall being adjacent said opposite side edge of said top whenever said container is in its erected position but being adjacent said one side edge of said top whenever said container is in its collapsed position, the first said means and said further anti-friction elements and said further guides continuously maintaining said first side wall and said second side wall in assembled relation with said top while permitting tilting movement of said side walls relative to said top, said second means and the first said anti-friction elements and the first said guides continuously maintaining said second side wall and said first side wall in assembled relation with said base while permitting tilting movement of said side walls relative to said base.

2. A collapsible shipping container as claimed in claim **1** wherein said first side wall has a height shorter than the width of said top, and wherein said second side wall has a height shorter than the width of said base, whereby said side walls can be tilted into generally-horizontal positions within a space defined by the side edges of said top and of said base.

3. A collapsible shipping container as claimed in claim **1** wherein said base has a flange adjacent said opposite side edge thereof which projects upwardly above the level of the central surface of said base, wherein said second means is secured to said flange and thus above the level of said central surface of said base, and wherein the first said means is disposed below the level of the central surface of said top.

4. A collapsible shipping container as claimed in claim **1** wherein said base has a flange adjacent said opposite side edge thereof which projects upwardly above the level of the central surface of said base, wherein the said second means is secured to said flange, and wherein the height of said flange is greater than the thickness of said first side wall, whereby said first side wall can be tilted into position and stored between said base and said second side wall.

5. A collapsible shipping container as claimed in claim **1** wherein the first said means is disposed below the level of the central surface of said top a distance

greater than the thickness of said second side wall, whereby said second side wall can be tilted into position and stored between said top and said first side wall.

6. A collapsible shipping container as claimed in claim 1 wherein said base has a flange adjacent said opposite side edge thereof which projects upwardly above the level of the central surface of said base, wherein said second means is secured to said flange, wherein the height of said flange is greater than the thickness of said first side wall, whereby said first side wall can be tilted into position and stored between said base and said second side wall, and wherein the first said means is disposed below the level of the central surface of said top a distance greater than the thickness of said second side wall, whereby said second side wall can be tilted into position and stored between said top and said first side wall.

7. A collapsible shipping container as claimed in claim 1 wherein the first said anti-friction elements are rollers, wherein the first said guides are grooves in said base, wherein said further anti-friction elements are rollers, and wherein said further guides are grooves in said top.

8. A collapsible shipping container as claimed in claim 1 wherein a closure for one end of said collapsible shipping container is pivoted to one end of one of said side walls to enable said closure to be rotated into face-to-face relation with said one side wall, wherein a closure for the other end of said collapsible shipping container is pivoted to the other end of said one side wall to enable said closure to be rotated into face-to-face relation with said one side wall, and wherein each of said closures has a width less than one-half the length of said collapsible shipping container, whereby both of said closures can be rotated inwardly of said collapsible shipping container and into face-to-face relation with said one side wall.

9. A collapsible shipping container as claimed in claim 1 wherein a closure for one end of said collapsible shipping container is pivoted to one end of one of said side walls to enable said enclosure to be rotated from a position at right angles to said one side wall to a position where it is in face-to-face relation with said one side wall, wherein a closure for the other end of said collapsible shipping container is pivoted to the other end of said one side wall to enable said closure to be rotated from a position where it is in face-to-face relation with the outer face of said one side wall to a position where it is in face-to face relation with the inner face of said one side wall and wherein each of said closures has a width just slightly less than the width of said base.

10. A collapsible shipping container as claimed in claim 1 wherein interfitting surfaces at said lower edge of said first side wall and at said one side edge of said base help said base stiffen said one side wall and vice versa, and wherein further interfitting surfaces at said upper edge of said second side wall and at said opposite side edge of said top help said top stiffen said second side wall and vice versa.

11. A collapsible shipping container as claimed in claim 1 wherein straps are pivotally secured to said one side edge of said base and are pivotally secured to the outer face of said one side wall approximately midway between said upper edge and said lower edge of said one side wall, wherein further straps are pivotally secured to said opposite side edge of said top and are pivotally secured to the outer face of said second side wall approximately midway between said upper edge and said lower edge of said second side wall, and wherein the first said straps and said further straps coact with said one side wall and with said second side wall to limit lateral shifting of said top relative to said base.

12. A collapsible shipping container as claimed in claim 1 wherein said base has a flange adjacent said opposite side edge thereof which projects upwardly above the level of the central surface of said base, and wherein said flange extends along and is substantially coextensive with said opposite side edge of said base to stiffen and strengthen said base.

13. A collapsible shipping container as claimed in claim 1 wherein said base has a flange adjacent said opposite side edge thereof which projects upwardly above the level of the central surface of said base, wherein said second means includes pins adjacent the opposite ends of said flange and adjacent the opposite ends of said second side wall that pivotally secure the lower edges of said opposite ends of said second side wall to said opposite ends of said flange, and wherein said first said means includes pins adjacent the opposite ends of said top and adjacent the opposite ends of said first side wall that pivotally secure the upper edges of the opposite ends of said first side wall to said opposite ends of said top.

14. A collapsible shipping container which comprises a base, a top, a first side wall, a second side wall, means pivotally securing the upper edge of said first side wall to said top adjacent one side edge of said top, the lower edge of said first side wall being adjacent one side edge of said base whenever said container is in its erected position but being adjacent the opposite edge of said base whenever said container is in its collapsed position, second means pivotally securing the lower edge of said second side wall to said opposite side edge of said base, the upper edge of said second side wall being adjacent the opposite side edge of said top whenever said container is in its erected position but being adjacent said one side edge of said top whenever said container is in its collapsed position, straps pivotally secured to said one side edge of said base and pivotally secured to the outer face of said one side wall approximately midway between said upper edge and said lower edge of said one side wall, and further straps pivotally secured to said opposite side edge of said top and pivotally secured to the outer face of said second side wall approximately midway between said upper edge and said lower edge of said second side wall, and the first said straps and said further straps coacting with said one side wall and with said second side wall to limit lateral shifting of said top relative to said base.

15. A collapsible shipping container as claimed in claim 14 wherein said one side wall is rotatable into a position where it is generally horizontal and is disposed between said top and said base, wherein the first said straps respond to such rotation of said one side wall to move into position between said base and said one side wall, wherein said second side wall is rotatable into a position where it is generally horizontal and is disposed between said top and said base, and wherein said further straps respond to such rotation of said second side wall to move into position between said top and said second side wall.

16. A collapsible shipping container which comprises a base, a top, a first side wall, a second side wall, means pivotally securing the upper edge of said first side wall to said top adjacent one side edge of said top, interacting surfaces on said base and on the lower edge of said first side wall which continuously maintain said lower edge of said first side wall in engagement with said base while permitting said lower edge of said first side wall to move from one side edge of said base to the opposite side edge of said base and vice versa, second means pivotally securing the lower edge of said second side wall to said opposite side edge of said base, and further interacting surfaces on said top and on the upper edge of said second side wall which continuously maintain said upper edge of said second side wall in engagement with said top while permitting said upper edge of said second side wall to move from the opposite side edge of said top to said one side edge of said top and vice versa.

17. A collapsible shipping container as claimed in claim 16 wherein members can receive lifting forces and can respond to said lifting forces to raise said top, and wherein the raising of said top, whenever said collapsible shipping container is in its collapsed position, automatically tends to move said first side wall and said second side wall toward their erected positions.

18. A collapsible shipping container as claimed in claim 16 wherein an abutment on said lower edge of said first side wall engages a complementary abutment adjacent said one side edge of said base whenever said collapsible shipping container is in its erected position, wherein a second abutment on said upper edge of said second side wall engages a second complementary abutment adjacent said opposite side edge of said top whenever said collapsible shipping container is in its erected position, wherein the engagement between the first said abutment and the first said complementary abutment is a sealing engagement, and wherein the engagement between said second abutment and said second complementary abutment is a sealing engagement.

19. A collapsible shipping container as claimed in claim 16 wherein an abutment on said lower edge of said first side wall engages a complementary abutment adjacent said one side edge of said base whenever said collapsible shipping container is in its erected position, wherein a second abutment on said upper edge of said second side wall engages a second complementary abutment adjacent said opposite side edge of said top whenever said collapsible shipping container is in its erected position,wherein the engagement between the first said abutment and the first said complementary abutment keeps said lower edge of said first side wall from rotating outwardly beyond said one side edge of said base, and wherein the engagement between said second abutment and said second complementary abutment keeps said upper edge of said second side wall from rotating outwardly beyond said opposite side edge of said top.

20. A collapsible shipping container as claimed in claim 16 wherein an abutment on said lower edge of said first side wall engages a complementary abutment adjacent said one side edge of said base whenever said collapsible shipping container is in its erected position, wherein a second abutment on said upper edge of said second side wall engages a second complementary abutment adjacent said opposite side edge of said top whenever said collapsible shipping container is in its erected position, wherein the engagement between the first said abutment and the first said complementary abutment is an interlocking engagement which provides a tensile joint between said first side wall and said base, and wherein the engagement between said second abutment and said second complementary abutment is an interlocking engagement which provides a tensile joint between said second wall and said top.

21. A collapsible shipping container as claimed in claim 16 wherein a rib on said lower edge of said first side wall will engage a complementary groove adjacent said one side edge of said base whenever said collapsible shipping container is in its erected position, wherein a second rib on said upper edge of said second side wall will engage a second complementary groove adjacent said opposite side of said top whenever said collapsible shipping container is in its erected position.

22. A collapsible shipping container as claimed in claim 1 wherein said base has a flange adjacent said opposite side edge thereof which projects upwardly above the level of the central surface of said base, wherein a closure is pivotally secured to said first side wall and is rotatable into face-to-face relation with said first side wall, wherein said flange spaces said second means above said level of said central surface of said base a distance greater than the sum of the thicknesses of said first side wall and said closure, whereby said first side wall can be tilted into position and stored between said central surface of said base and said second side wall while said closure is in face-to-face relation with said first side wall.

23. A collapsible container as claimed in claim 14 wherein pivots secure said lower edge of said first side wall to members that can move from said one side edge of said base to said opposite edge of said base and vice versa, wherein the lengths of said first said straps are substantially equal to the distances between said pivots and a line defined by the upper ends of said first said straps, wherein further pivots secure said upper edge of said second side wall to further members that can move from said opposite side edge of said top to said one side edge of said top and vice versa, and wherein the lengths of said further straps are substantially equal to the distances between said further pivots and a line defined by the lower ends of said further straps.

24. A collapsible container as claimed in claim 14 wherein said top has force-receiving elements thereon which can receive upwardly-directed forces that can facilitate movement of said lower edge of said first side wall from said opposite edge of said base to said one side edge of said base and that can facilitate movement of said upper edge of said second side wall from said one side edge of said top to said opposite side edge of said top.

25. A collapsible container as claimed in claim 14 wherein said top has force-receiving elements thereon which can receive upwardly-directed forces, wherein said force-receiving elements are relatively movable between extended and retracted positions, and wherein said force-receiving elements are dimensioned to receive the tines of a fork lift truck whenever they are in their extended positions.

26. A collapsible shipping container as claimed in claim 16 wherein said base has raised portions at said one side edge and at said opposite side edge thereof,

and wherein said raised portions can act as stops to prevent sideways shifting of one of said side walls when said collapsible shipping container is in its collapsed position.

27. A collapsible shipping container as claimed in claim **16** wherein closures are provided at the opposite ends of said collapsible shipping container, and wherein said closures help hold the ends of said lower edge of said first side wall adjacent said one side edge of said base and help hold the ends of said upper edge of said second side wall adjacent said opposite side of said top whenever said collapsible shipping container is in its erected position.

28. A collapsible shipping container as claimed in claim **16** wherein closures are provided at the opposite ends of said collapsible shipping container, wherein said closures help hold the ends of said lower edge of said first side wall adjacent said one side edge of said base and help hold the ends of said upper edges of said second side wall adjacent said opposite side of said top whenever said collapsible shipping container is in its erected position, wherein a releasable holding means is provided intermediate said ends of said collapsible shipping container and adjacent said lower edge of said first side wall to help hold the intermediate portions of said lower edge of said first side wall adjacent said one side edge of said base whenever said collapsible shipping container is in its erected position, and wherein a second releasable holding means is provided intermediate said ends of said collapsible shipping container and adjacent said upper edge of said second side wall to help hold the intermediate portions of said upper edge of said second side wall adjacent said opposite side of said top whenever said collapsible shipping container is in its erected position.

29. A collapsible shipping container as claimed in claim **16** wherein the first said means includes aligned pivots which are disposed below the level of said top and below the level of said upper edge of said first side wall and which are disposed inwardly of the inner surface of said first side wall, whereby said upper edge of said first side wall will not project outwardly beyond said one side of said top whenever said collapsible shipping container is in its collapsed position.

30. A collapsible shipping container as claimed in claim **16** wherein said base is unitary and is not foldable, wherein said top is unitary and is not foldable, wherein said first side wall is unitary and is not foldable, wherein said second side wall is unitary and is not foldable, wherein a closure is provided for one end of said collapsible shipping container and is unitary and is not foldable, and wherein a second closure is provided for the opposite end of said collapsible shipping container and is unitary and is not foldable.

31. A collapsible shipping container as claimed in claim **16** wherein said first side wall is unitary and is not foldable, wherein a closure is provided for one end of said collapsible shipping container and is unitary and is not foldable, wherein a second closure is provided for the opposite end of said collapsible shipping container and is unitary and is not foldable, and wherein said closures are rotatable into face-to-face relation with the inner face of said first side wall and then said first side wall is tiltable toward said base so the outer face of said first side wall confronts and approaches said base.

32. A collapsible shipping container as claimed in claim **16** wherein a closure is provided for one end of said collapsible shipping container, wherein said closure is hinged to one end of one of said side walls, wherein said closure is rotatable into and out of face-to-face relation with the inner face of said one side wall, and wherein said closure also is rotatable into and out of face-to-face relation with the outer face of said one side wall.

33. A collapsible shipping container as claimed in claim **14** wherein said first said straps limit sideways movement of said first side wall relative to said base whenever said collapsible shipping container is in its collapsed position, and wherein said further straps limit sideways movement of said second side wall relative to said top whenever said collapsible shipping container is in its collapsed position.

34. A shipping container which has a base of predetermined width, a spacer which is hingedly secured to one side of said base and which is movable between a substantially horizontal extended position and a substantially vertical retracted position, said spacer being in said substantially vertical retracted position whenever said container is to be disposed within a space that has a width just slightly greater than said predetermined width, said spacer being in said substantially horizontal extended position whenever said container is to be disposed within a space that has a width appreciably greater than said predetermined width and when the positioning of said spacer in said substantially horizontal extended position will dispose the free edge of said spacer closely adjacent to a nearby object, and means to selectively hold said spacer in said substantially horizontal extended position, said free edge of said spacer having means thereon engageable with a restraint system of a conveyance when said spacer is in said substantially horizontal extended position to resist shifting of said shipping container relative to said conveyance.

35. A shipping container as claimed in claim **34** wherein said base has a recess therein, and wherein said spacer is disposed within said recess when said spacer is in said substantially vertical retracted position.

* * * * *