PCT WORLD INTELLECTUAL PROPERTY ORGANIZATION
International Bureau

INTERNATIONAL APPLICATION PUBLISHED UNDER THE PATENT COOPERATION TREATY (PCT)

(51) International Patent Classification 5 :		(11) International Publication Number:	WO 93/10996
B60N 2/54, 2/08	A1	(43) International Publication Date:	10 June 1993 (10.06.93)

(21) International Application Number: PCT/AU92/00647

(22) International Filing Date: 2 December 1992 (02.12.92)

(30) Priority data:

PK 9799	2 December 1991 (02.12.91)	AU
PL 4167	18 August 1992 (18.08.92)	AU

(71) Applicant *(for all designated States except US)*: ROSDON ENGINEERING & MANUFACTURING PTY. LTD. [AU/AU]; Maroochydore Road, Buderim, QLD 4557 (AU).

(72) Inventors; and
(75) Inventors/Applicants *(for US only)* : BAILEY, William, John, Seybourne [AU/AU]; 2 Heidi Place, West Pennant Hills, NSW 2120 (AU). CULLEY, Donald, Maxwell [AU/AU]; CULLEY, Donald, Maxwell, Jr. [AU/AU]; Maroochydore Road, Buderim, QLD 4557 (AU). WARD, Stephen, James [AU/AU]; 224 Johnston Street, Annandale, NSW 2038 (AU).

(74) Agent: GRANT ADAMS & COMPANY; 9th Floor, National Mutual Centre, 144 Edward Street, GPO Box 1413, Brisbane, QLD 4000 (AU).

(81) Designated States: AU, BR, CA, GB, HU, JP, KR, NO, NZ, PL, RO, RU, US, European patent (AT, BE, CH, DE, DK, ES, FR, GB, GR, IE, IT, LU, MC, NL, PT, SE).

Published
With international search report.

(54) Title: VEHICLE SEAT SUSPENSION UNIT

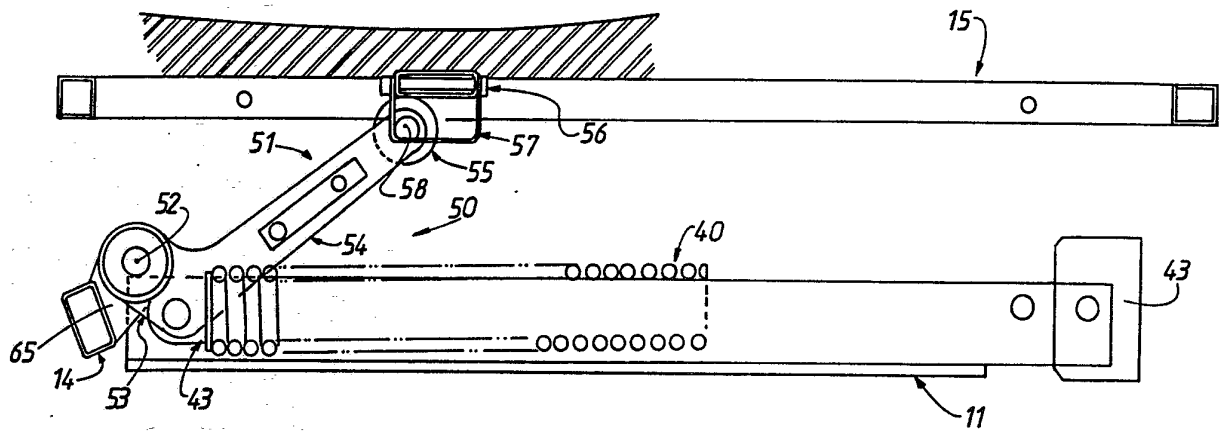

(57) Abstract

A vehicle seat suspension unit has a base frame (11) and seat support frame (15) connected by a scissor arm assembly to enable relative movement of the frames (11, 15) in parallelism. A transfer assembly (50), pivotally mounted on the base frame (11), has a pair of transfer levers (54) slidably connected to the seat support frame (15), and adjustable spring assembly (40) connected to the base frame (11) and transfer assembly (50), to set the suspension unit at an initial height. A brake disc damper assembly or decelerator (centred on pin 52) provides zero damping at small displacements of the frames (11, 15), increasing damping as the displacement increases. Also disclosed is a seat slide assembly consisting of fixed and movable slides, latch means to lock their relative positions and overlapping flanges on both slides to prevent separation during an accident.

FOR THE PURPOSES OF INFORMATION ONLY

Codes used to identify States party to the PCT on the front pages of pamphlets publishing international applications under the PCT.

AT	Austria
AU	Australia
BB	Barbados
BE	Belgium
BF	Burkina Faso
BG	Bulgaria
BJ	Benin
BR	Brazil
CA	Canada
CF	Central African Republic
CG	Congo
CH	Switzerland
CI	Côte d'Ivoire
CM	Cameroon
CS	Czechoslovakia
CZ	Czech Republic
DE	Germany
DK	Denmark
ES	Spain
FI	Finland
FR	France
GA	Gabon
GB	United Kingdom
GN	Guinea
GR	Greece
HU	Hungary
IE	Ireland
IT	Italy
JP	Japan
KP	Democratic People's Republic of Korea
KR	Republic of Korea
KZ	Kazakhstan
LI	Liechtenstein
LK	Sri Lanka
LU	Luxembourg
MC	Monaco
MG	Madagascar
ML	Mali
MN	Mongolia
MR	Mauritania
MW	Malawi
NL	Netherlands
NO	Norway
NZ	New Zealand
PL	Poland
PT	Portugal
RO	Romania
RU	Russian Federation
SD	Sudan
SE	Sweden
SK	Slovak Republic
SN	Senegal
SU	Soviet Union
TD	Chad
TG	Togo
UA	Ukraine
US	United States of America
VN	Viet Nam

TITLE: "VEHICLE SEAT SUSPENSION UNIT"

BACKGROUND OF THE INVENTION

1. Field of the Invention

THIS INVENTION relates to a vehicle seat suspension unit.

2. Prior Art

A vehicle operator's comfort and efficiency is dependent on providing a suitable suspension unit for his seat to eliminate, or at least reduce, the shocks and vibration transmitted from the vehicle to the operator via his seat.

In International Publication No. WO90/11841 (Rosdon Engineering & Manufacturing Pty. Ltd.) we disclosed a seat suspension unit where the preload and the main spring rate could be varied to suit the operator's weight. That unit have proved to be a significant advance on existing units but it, in turn, had certain design and operating limitations.

SUMMARY OF THE INVENTION

It is an object of the present invention to provide a vehicle seat suspension unit where a single transfer assembly transfers the spring force to the seat platform at a varying rate.

It is a preferred object that the shape and geometry of the transfer assembly can be altered to provide desired characteristics of force and deflection to the platform.

It is a further preferred object to provide a unit where adjustment of the spring tension to suit occupants of varying weights can be easily effected.

It is a still further preferred object to provide a unit which is compact in design and which allows an overall reduction in spring rate which in turn provides an increase in isolation efficiency.

It is a still further preferred object to provide an improved slides and locking system which satisfies the requirements for movement free latching

(in normal use) and high structural strength in collisions.

Other preferred objects will become apparent from the following description.

In one aspect the present invention resides in a vehicle seat suspension unit including:

a base frame mountable on a vehicle;

a seat support frame to mount a vehicle operator's seat;

a scissor arms assembly interconnecting the frames to enable the frames to move relative to each other substantially in parallelism;

a transfer assembly pivotally mounted on one of the frames, having at least one arm;

spring means mounted at one end on one of the frames and connected to the transfer assembly, the arm of the transfer assembly engaging the other of the frames; and

damping means on, or engageable with, the transfer assembly;

so arranged that as the frames move relatively towards or away from each other, the spring rate and/or damping is applied at a variable rate.

Preferably the frames are substantially rectangular in plan view. Preferably the base frame incorporates the runners or slides for longitudinal adjustment of the seat in the vehicle.

The seat support frame may have the seat bolted to it or the frame may be moulded into the base of the seat, and the seat belts may be anchored on the seat support frame.

Preferably the scissor arms assembly includes a pair of primary scissor arms and a pair of secondary scissor arms pivotally (and/or slidably) connected to the frames and to each other and the second scissor arms may be connected to the frames by pivotal and/or slidable) links. Reinforcing plates or bars may

connect the arms in each pair.

The transfer assembly may include at least one, but preferably two, transfer levers, in the form of bell cranks, pivotally mounted intermediate their length on one of the frames. One arm of each transfer lever is connected to the spring assembly while the other arm preferably has a roller at its distal end to engage the other frame.

Preferably the damping means are provided on, or integral with, the mounting for the transfer lever(s).

Preferably, in one embodiment, the damping means includes opposed, movable and fixed brake discs, each with braking face sectors separated by relieved portions, wherein at an initial (or neutral) position, the respective face sectors are separated by a "TEFLON" (or like plastic bush) for substantially zero damping, the face sectors coming into contact to provide a damping effect when the two frames are displaced a small distance from the initial preload (or neutral) position, the damping rate increasing with the displacement.

Alternatively, in a second embodiment, the damping means is a "decelerator" with braking faces urged into contact by male and female brake members with complementary ridges (or ribs) and valleys (or grooves) wherein, at an initial preload (or neutral) position, the brake members effectively apply zero damping effect when the two frames are displaced a small distance from the preload (neutral) position. As the displacement increases, the relative rotation of the braking members applies a greater applied load onto the braking faces to increase the effective damping.

Preferably, the ridges/ribs and valleys/grooves are arranged radially on the male and female brake members and are of reducing taper and height and width towards the centre thereof.

Preferably, a cast iron brake disc and the

male brake member are non-rotatably mounted on a support on one (preferably the bottom) frame and the female brake member is rotated relative thereto by fingers or the like on the transfer levers.

Preferably, Belleville washers, or like spring means apply a preset preload to the braking faces on the cast iron brake disc and the female brake member, and between the male and female brake members.

Preferably, the spring means are mounted on adjustable mounts to enable the operator's weight to be compensated for so that the seat unit can be set at an initial preload or neutral height.

In a third embodiment, the damping means is a "decelerator" where a shaft or tubular body is rotatably mounted on one of the frames and is rotatable by the transfer assembly. At least one eccentric is provided on the shaft or tubular body and is received within a bore in a braking member, friction braking material being provided about the eccentric and/or within the bore. The braking member is preferably movably mounted on the one frame and preferably has spring means engageable with the frame, the eccentric being rotated into braking or damping engagement with the brake member by the transfer assembly as the two frames are displaced from the preload (neutral) position.

Preferably, the braking or damping increases as the displacement from the preload (neutral) position increases.

Preferably, a respective pair of eccentrics/ braking members are provided, preferably 180° out of phase relative to the shaft or tubular body, a respective eccentric/braking member providing the braking or damping as the frames move in opposite directions from the preload position.

Preferably, the spring means, which may comprise Belleville washers, are adjustable to enable the braking or damping to be adjusted.

In a second aspect, the present invention resides in a damping means for a vehicle seat suspension unit in accordance with the embodiments hereinbefore described.

In a third aspect, the present invention resides in an improved seat slide assembly for vehicles including:

a fixed slide mountable on a vehicle and having an upstanding flange formed with notches or slots;

a movable slide supported by roller and/or ball means movable along the fixed slide;

latch means on the movable slide releasably engageable with the notches or slots on the fixed slide; and

respective flange means on the slides in overlapping arrangement to prevent disengagement of the slides if the slides undergo a relative twisting action.

Preferably the latch means are spring loaded towards engagement with the notches or slots, the latch means being movable towards a disengaged position by a release plate pivotally mounted on the movable slide and operable by a linkage from a remote handle.

BRIEF DESCRIPTION OF THE DRAWINGS

To enable the invention to be fully understood, preferred embodiments will now be described with reference to the accompanying drawings, in which:

FIGS. 1 and 2 are respective side views of the seat suspension unit at maximum and minimum height respectively;

FIGS. 3 and 4 are respective side views of the transfer assembly and spring assembly at maximum and minimum height respectively;

FIG. 5 is a side view of a modified transfer assembly;

FIGS. 6 to 8 show respective side, end and sectional views of a fixed brake disc;

FIGS. 9 to 11 shows similar view of a bearing housing and movable brake disc;

FIG. 12 is a top, part-sectional view of a second embodiment of the damping, or "decelerator" means;

FIG. 13 an exploded view of some of the components of the decelerator means;

FIGS. 14 to 16 are respective side, bottom and end views of the transfer levers;

FIGS. 17 and 18 are respective part-sectional and side views of the bearing housings on the transfer levers;

FIGS. 19 and 20 are side and front views of the braking shaft;

FIGS. 21 and 22 are end and side views of the cast iron braking disc;

FIGS. 23 to 26 are respective front, side, end and sectional views of the female brake member; and

FIGS. 27 to 30 are respective front, side, part-sectional, side and side-sectional views of the male brake member;

FIG. 31 is a top plan view of a third embodiment of the damping, or "decelerator" means;

FIG. 32 is a front elevational view of the tube and eccentrics;

FIG. 33 is a side view of the tube and transfer levers;

FIGS. 34 to 35 are sectional end views taken on lines 34-34 and 35-35, respectively, on FIG. 31;

FIG. 36 is a sectional end view of a seat slide assembly;

FIGS. 37 and 38 are side views of the seat slide latching assembly in the latched and released positions; and

FIG. 39 is a top plan view of a latch.

BRIEF DESCRIPTION OF THE PREFERRED EMBODIMENTS

Referring to FIGS. 1 and 2, the seat

suspension unit 10 has a base frame 11, where the side rails comprise the movable slides 12 of the seat slide assemblies (see FIG. 36) and they are interconnected by front and rear cross tubes 13, 14. The seat support frame 15 is substantially rectangular in plan view and has side rails 16 and front and rear rails 17, 18 of RHS steel.

The operator's seat 18, has its frame mounted on, or integral with, the support frame 15 and the seat may have polyurethane or closed cell foam padding.

The seat belts (not shown) may be anchored to the support frame 15 or the base frame 11, the construction of the seat slide assemblies (to be hereinafter described) resisting any twisting loads in a collision.

A first scissor assembly 19 has a pair of primary links 20 pivotally mounted on the movable slides 12 by means of a pin and a spherical self-aligning bearing 21.

The primary links are joined at the rearward ends by a lateral steel tube section 22, which has moulded inserts of low friction material. A circular rod 23 interconnects the side rails 16 of the seat support frame 15 and has sliding blocks 24 (or rolling elements) received in the inserts in the steel tube 22 to allow relative rotation and sliding movement between the steel tube and the rod 23.

The second scissor assembly 25 has a pair of tubular secondary links 26 interconnected at their forward ends by a lateral tubular section 27 mounted on low friction bushes 28 located on a circular rod 29 interconnecting the side rails 16 of the seat support frame 15.

At the rearward ends of the links 26, mounted inserts 30 have slots 31 which slidably locate blocks 32 (or rolling elements) rotatable on pins 33 on the movable slides 12, the blocks and pins providing

relative translation and rotation of the links 26 to the slides.

The primary and secondary links 20, 26 of the scissor assemblies are pivotally interconnected intermediate their lengths by pivot pins and self-aligning bearings 34.

Referring to FIGS. 3 and 4, the forward ends of a pair of parallel coil springs 40 are mounted (in a screw-threaded type engagement) with mounting blocks 41 (see FIG. 5), the latter having a screw-threaded bore to receive a threaded rod 42 mounted at its forward end in a gearbox 43 mounted on the front cross-tube 13. An electric motor (not shown) is operably connected to the threaded rods 42 via suitable gears to rotate the rods 42 to extend, or retract, the springs 40 to enable the seat height to be adjusted to a preset preload (or neutral) height for a wide range of operator's weights. The rearward ends of the springs 40 are mounted on spring blocks 43 which are pivotally connected via low friction roller bearings to an axle located on the transfer lever 50 to be hereinafter described.

The transfer assembly 50 has a pair of bell cranks 51 interconnected in spaced relationship by an axle 52. A lower (shorter) arm 53 on each bell crank is pivotally connected to a respective spring block 43 while the upper, longer arm 54 has a roller 55 at its distal end which bears on a cross-tube or plate 56 on the support frame 15, preferably in the vertical plane of the centre of gravity (C.G.) of the suspension unit 10. The rollers 55 are kept in engagement with the plate 56 by a loop 57 which engages the axle 58 which rotatably supports the rollers 55 on the arms 54.

The axle 52 for the bell cranks 51 has bearings (not shown) for the spring blocks on its outer ends received in recesses 59 in the bush housings 60 (see FIG. 7), the outer faces 61 of the bush housings having raised braking sectors 62 which stand proud of

the adjacent faces 61. (The braking sectors may have an included angle of e.g. 48° ± 05°).

A "TEFLON" (trade mark) bush (not shown) is received in a recess 63 in the bush housing and it engages the inner face of an adjacent fixed brake disc 64 (see FIG. 6), each fixed brake disc 64 being mounted on a respective support bracket 65 as the rear cross-tube 14 of the base frame 11. (Nuts and washers on the face ends of the axle 52 bear on the outer faces of the support brackets.)

Each fixed brake disc 64 has braking sectors 66 raised above the adjacent inner face portions 67. The braking sectors 66 may have included angles of e.g. 38° ± 05°.

When assembled, and with the suspension unit in its initial preload (neutral) position, the braking sectors 62 of the bush housing 60 lie between the braking sectors 66 of the fixed brake discs 64, with the "TEFLON" washers interposed between the bush housing 60/brake disc 64 pairs. At this initial preload position, and a short distance either side, the damping is substantially zero. However, as the displacement is increased, the braking sectors (of cast iron and steel) come into contact, the degree of contact increasing with increasing displacement. When the braking sectors come into contact, damping is increased by a factor of e.g. 10:1 compared to the initial damping at the initial preload position. This is important in vibration isolation as for small amplitudes (tending to be associated with higher frequencies), best isolation is with no damping, whereas with higher amplitudes (associated with lower frequencies), best isolation (or at least reduction in amplification) is obtained with high damping.

The operator may initially adjust the seat unit to the initial preload (neutral) height, while the vehicle is stationary, using a control switch for the

electric motor to adjust the spring length. Alternatively, proximity switches on the suspension unit may automatically set the height by operating the electric motor.

The overall assembly provides a compact unit, with a relatively low spring rate but with high isolation of vibration due to the low (possibly zero) spring rate and the controlled, selective damping dependent on the displacement of the suspension unit from a preset initial (preload) position.

Referring now to FIGS. 12 to 30, the "decelerator" means 100 may be substituted for the damping means (see FIGS. 6 to 11) to damp the suspension unit 10.

A post 101 is mounted on the rear cross-tube 14 of the base frame 11 and the springs 40 are attached to the ends of an axle 102 on the transfer assembly 103, which is a modified form of the transfer assembly 50.

A brake shaft 104 (see FIGS. 19 and 20), with an elongate keyway 105, is non-rotatably anchored (via a key not shown) in the post 101 and extends to each side thereof.

A respective cast iron brake disc 106 (see FIGS. 21, 22) is keyed to the shaft 104 on each side of the post 101.

A female brake member 107 (see FIGS. 23 to 26) has an inner planar braking face 108 to engage the adjacent respective brake disc 106 and a plain bore 109 for rotatable journalling on the shaft 104. Three sectors are relieved to form slots 110 and the sectors are separated by radial valleys 111.

Each valley 111 extends radially and is of substantially V-shape in end view (see FIGS. 24 and 25) and is of decreasing width (see FIG. 23) and depth (see FIG. 26) towards the centre of the member.

The slots 110 are engaged by respective fingers 112 on bearing housings 113 on the transfer

assembly 103 (see FIGS. 12-18).

The male brake members 114 (see FIGS. 27-30) have a tubular body 115 with a slotted bore 116a for keyed, non-rotational mounting on the shaft 104. The end face 116 of a peripheral flange 117 is brought into complementary contact with the face 118 on the female brake member 106 provided with the valleys 111. The end face 116 has three radially directed ribs 119 (see FIG. 27) of decreasing width and height towards the centre, complementary to the valleys 111.

Belleville washers 120, on the shaft 104, are preloaded by nuts 121 to apply a preload force on the male brake member 114, female brake member 107 and cast iron brake disc 106.

The bearing housings 113 of the transfer and assembly 113 are rotatably journalled on the bodies 115 of the male brake members 114 by bushes or bearings not shown. Rollers (not shown) are provided at the distal ends of the transfer levers 122 and the transfer assembly 104 operates in the manner hereinbefore described for transfer assembly 50, which it replaces.

The operation of the "decelerator" means 100 will now be described.

In the preload (neutral) position, the ribs 119 on the male brake member 114 lie within the complementary valleys 111 of the female brake member 107 and the braking face 108 of the latter is pressed against the cast iron braking ring 106, the washers 120 being adjusted so that there is substantially zero damping for the first one-third of travel or deflection of the suspension unit from the central position.

When the unit is deflected from the preload (neutral) position, the fingers 112 on the transfer assembly 103 cause the female brake member 107 to rotate relative to the male brake member 114 and the cast iron brake discs 106 non-rotatably mounted on the shaft 104, the fingers extending through slots 123 on the male

brake members 114. The valleys 111 are rotatably displaced relative to the ribs 119 and their relative tapered shapes tend to move the brake members apart, which maintains the radial line contact between the ribs 119 and valleys 111. This movement is opposed by the washers 120 and so an increased braking force is generated between the braking face 108 on the female brake member 107 and the brake disc 106. This braking, or damping, force is of a rising rate dependent on the shape and height of the ribs 119/valleys 111 but substantially zero damping occurs within approximately one-third of the preload (neutral) position of the unit 10. The advantages of this arrangement are as hereinbefore described for the damping system of FIGS. 6 to 11.

Referring now to FIGS. 31 to 35, the "decelerator" means 200 may also be substituted for the damping means (see FIGS. 6 to 11) to damp the suspension unit 10.

The rear cross-tube 14 is replaced by an inclined cross-bar 201 with end plates 202, 203 bolted to the adjacent movable slides 12 on the base frame 11.

A pair of brackets 204, 205 on the cross-bar 201 support a shaft 206, which has a screw-threaded bore at each end to receive studs 207, 208 through the brackets 204, 205.

As shown in FIGS. 34 and 35, a tube 209 is rotatably journalled at each end on the shaft 206 by bearings 210, 211. An eccentric 212, 213 is formed integrally with, or welded or brazed to, each end of the tube 209, the eccentrics 212, 213 being 180° out of phase (see FIGS. 32, 34, 35).

Transfer levers 214, 215 extend in parallel, substantially tangentially to the tube 209 and their distal ends are interconnected by an axle 216 on which are rotatably journalled rollers 217, 218 which engage the plate 56 on the support frame 15, preferably in the

vertical plane of the centre of gravity (C.G.) of the suspension unit 10. A plate 219 braces the transfer levers 214, 215 intermediate their length. The springs 40 are connected to a pair of brackets 220, 221 depending from the tube 209.

Each eccentric 212, 213 is received within the bore 222, 223 of a brake member 224, 225 lined with a ring of friction braking material 226, 227. Each braking member 224, 225 is movably mounted on the cross-bar 201 by a stud 228, 229 provided with a locking nut 230, 231 and Belleville spring(s) 232, 233.

The operation of the "decelerator" means 200 will now be described.

With the suspension unit in the preload (neutral) position, there is a small clearance between the eccentrics 212, 213 and the respective rings of braking material 226, 227 and small deflections from the preload position will not engage the eccentrics 212, 213 and rings 226, 227 and the damping is substantially zero.

If the frames move apart a small distance (ie. the transfer levers 214, 215 move in the direction of arrow X in FIG. 34), the eccentric 212 will engage the rings 226 and cause the brake member 224 to move in the direction X^1 (see FIG. 34) (and away from cross-bar 201) and the Belleville spring 232 will start to be compressed. As the displacement is increased, the damping force generated between the eccentric 212 and rings 226 will be increased. (The eccentric 213 will move the brake member 225 in the direction opposite to arrow Y^1 (see FIG. 35) and the clearance between the brake member 225 and the cross-bar 201 will not cause the eccentric 213 to frictionally engage its rings 227.) When the frames move towards each other (ie. the transfer levers 214, 215 move in the direction of arrow Y (see FIG. 35), the eccentric 213 moves the brake member 225 in the direction of arrow Y^1 and increasing

displacement increases the damping force generated between the eccentric 213 and ring 227 (with no damping force between eccentric 212 and its ring 224).

Each eccentric 212, 213 only generates a damping force when it pulls on its respective brake members 224, 225, the brake members 224, 225 having a clearance which allows them to "float" relative to the cross-bar 201 when pushed by their eccentrics 212, 213.

It will be noted that when the suspension unit is in the preload (neutral) position, the bores 222, 223 of the brake members 224, 225 are co-axial with the eccentrics 212, 213 and the rollers 217, 218 engage the plate 56 at substantially the vertical plane of the centre of gravity of the suspension unit.

Referring now to FIGS. 36 to 39, the suspension unit 10 (of FIGS. 1 to 5) has a pair of seat slide assemblies 370, each with a fixed slide 71 and a movable slide 12, both formed from aluminium extrusions.

The fixed slide 71 has a base web 72 which can be bolted to the vehicle floor and on which rolls a plurality of rollers 73 (with spacers not shown) which support the initial web 74 of the movable slide 12. Opposed pairs of hook-like flanges 75, 76 and 77, 78 on the fixed and movable slides 71, 12 respectively are spaced by low-friction balls 78a (provided with spacers not shown, to control their longitudinal separation) which provide stability and smooth operation for the slides. An upwardly directed flange 79 on the movable slide lies within a downwardly directed recess 80 in the fixed slide 71. Should the suspension unit be placed under a tipping load e.g. during a vehicle collision, the flange 79 engages and locks in the recess to lock the slides 71, 12 against separation. This enables the seat belt anchors to be mounted on the seat or seat support frame 15.

The two slide assemblies 70 are independently latched against longitudinal movement although only one

assembly need be latched to restrain the seat 18 against fore-and-aft movement.

A latch unit 81 (see FIG. 39) is provided for each movable slide 12 and is pivotally mounted on a pin 82 interconnecting the upstanding side flanges 83, 84 of the slide 12. A loop 85 on one side of the latch unit releasably engages an adjacent pair of notches 86 on the locking flange 87 on the fixed slide 71, the latch unit 81 being urged into locking engagement by a spring (not shown).

A release plate 88, also mounted on the pin 82, has a nose 89 which engages an extension 90 on the loop 85 and is operated by a link 91 to a bell crank 92 attached to one end of the seat adjustment handle 93 which interconnects the two bell cranks 92 so that the latch units 81 are released in unison.

It will be noted that the indirect connection of the handle 93 to the latch units 81 enables them to be released in unison but that they re-latch the slides independently when their loops 85 are aligned with the notches 86.

It will be readily apparent to the skilled addressee that the seat slide assemblies are also suitable for vehicles, e.g. automobiles, where a seat suspension unit is not employed but efficient mountings are required for the vehicle seats.

The overall arrangement is compact, lightweight, strong, with a low spring rate and highly efficient, controlled damping.

Various changes and modifications may be made to the embodiments described and illustrated without departing from the scope of the present invention defined in the appended claims.

CLAIMS

1. A vehicle seat suspension unit including:

a base frame mountable on a vehicle;

a seat support frame to mount a vehicle operator's seat;

a scissor arms assembly interconnecting the frames to enable the frames to move relative to each other substantially in parallelism;

a transfer assembly pivotally mounted on one of the frames, having at least one arm;

spring means mounted at one end on one of the frames and connected to the transfer assembly, the arm of the transfer assembly engaging with the other of the frames; and

damping means on, or engageable with, the transfer assembly;

so arranged that as the frames move relatively towards or away from each other, the spring rate and/or damping is applied at a variable rate.

2. A unit according to Claim 1 wherein:

the frames are substantially rectangular in plan view;

the base frame incorporates runners or slides for longitudinal adjustment of the seat in the vehicle;

the seat support frame has the seat bolted to it or the frame is moulded into the base of the seat; and

optionally, seat belts are anchored on the seat support frame.

3. A unit according to Claim 1 or Claim 2 wherein:

the scissor arms assembly includes a pair of primary scissor arms and a pair of secondary scissor arms pivotally (and/or slidably) connected to the frames and to each other; and

the second scissor arms are connected to the

frames by pivotal (and/or slidable) links.

4. A unit according to any one of Claims 1 to 3 wherein:

the transfer assembly includes at least one, but optionally two, transfer levers, in the form of bell cranks, pivotally mounted intermediate their length on one of the frames; and

one arm of each transfer lever is connected to the spring assembly while the other arm has a roller at its distal end to engage the other frame.

5. A unit according to Claim 4 wherein:

the damping means are provided on, or integral with, the mounting for the transfer lever(s).

6. A unit according to any one of Claims 1 to 5 wherein:

the damping means includes opposed, movable and fixed brake discs, with braking face sectors separated by relieved portions, wherein at an initial preload (or neutral) position, the respective face sectors are separated by a "TEFLON" (or like plastic bush) for substantially zero damping, the face sectors coming into contact to provide a damping effect when the two frames are displaced a small distance from the initial preload position, the damping rate increasing with the displacement.

7. A unit according to any one of Claims 1 to 5 wherein:

the damping means is a "decelerator" including:

braking faces urged into contact by male and female brake members with complementary ridges (or ribs) and valleys (or grooves) wherein, at an initial preload (neutral) position, the brake members effectively apply zero damping effect when the two frames are displaced a small distance from the preload position, but as the displacement increases, the relative rotation of the braking member applies a greater applied load onto the

braking faces to increase the effective damping.

8. A unit according to Claim 7 wherein:

the ridges/ribs and valleys/grooves are arranged radially on the male and female brake members and are of reducing taper and height and width towards the centre thereof.

9. A unit according to Claim 7 or Claim 8 wherein:

a cast iron brake disc and the male brake member are non-rotatably mounted on a support on one (optionally the bottom) frame and the female brake member is rotated relative thereto by fingers or the like on the transfer levers.

10. A unit according to Claim 9 wherein:

Belleville washers, or like spring means apply a preset preload to the braking faces on the cast iron brake disc and the female brake member, and between the male and female brake members.

11. A unit according to Claim 10 wherein:

the spring means are mounted on adjustable mounts to enable the operator's weight to be compensated for so that the seat unit can be set at an initial preload (or neutral) height.

12. A unit according to any one of Claims 1 to 5 wherein:

the damping means is a decelerator including:

a shaft or tubular body rotatably mounted on one of the frames;

transfer levers of the transfer assembly on the shaft or body engageable with the other of the frames;

at least one eccentric on the shaft or tubular body; and

a brake member movably mounted on the one frame;

so arranged that the eccentric is received

in the brake member to engage friction braking material, wherein, at an initial preload or neutral position, the brake member applies effectively zero damping to the eccentric when the two frames are displaced a small distance from the preload position, but as the displacement increases, the relative rotation of the eccentric to the brake member applies a braking force between the eccentric and the braking material to increase the effective damping.

13. A unit according to Claim 12 wherein:

a pair of eccentrics are provided 180° out of phase on the shaft or tubular body and each is received in a respective brake member;

so arranged that damping is only generated between one of the eccentrics and its brake member as the frames are displaced in a given direction from the initial preload or neutral position.

14. A unit according to Claim 12 or Claim 13 wherein:

spring means are provided on the mounting means for the brake member(s) to oppose the movement of the brake member(s) away from the one frame, the damping being generated by the brake member pulled away from the one frame when the frames are displaced from the initial preload or neutral position.

15. A damping means for two frames of a vehicle seat suspension unit wherein:

the damping means is a decelerator including:

a shaft or tubular body rotatably mounted on one of the frames;

transfer levers of the transfer assembly on the shaft or body engageable with the other of the frames;

at least one eccentric on the shaft or tubular body; and

a brake member movably mounted on the one

frame;

so arranged that the eccentric is received in the brake member to engage friction braking material, wherein, at an initial preload or neutral position, the brake member applies effectively zero damping to the eccentric when the two frames are displaced a small distance from the preload position, but as the displacement increases, the relative rotation of the eccentric to the brake member applies a braking force between the eccentric and the braking material to increase the effective damping.

16. A damping means according to Claim 15 wherein:

a pair of eccentrics are provided 180° out of phase on the shaft or tubular body and each is received in a respective brake member;

so arranged that damping is only generated between one of the eccentrics and its brake member as the frames are displaced in a given direction from the initial preload or neutral position.

17. A damping means according to Claim 15 or Claim 16 wherein:

spring means are provided on the mounting means for the brake member(s) to oppose the movement of the brake member(s) away from the one frame, the damping being generated by the brake member pulled away from the one frame when the frames are displaced from the initial preload or neutral position.

18. A damping means for two frames of a vehicle seat suspension unit, wherein the damping means is a decelerator including:

braking faces urged into contact by male and female brake members with complementary ridges (or ribs) and valleys (or grooves) wherein, at an initial preload (neutral) position, the brake members effectively apply zero damping effect when the two frames are displaced a small distance from the preload position, but as the displacement increases, the relative rotation of the

braking member applies a greater applied load onto the braking faces to increase the effective damping.

19. A damping means for two frames of a vehicle seat suspension unit wherein:

the damping means includes opposed, movable and fixed brake discs, with braking face sectors separated by relieved portions, wherein at an initial preload (or neutral) position, the respective face sectors are separated by a "TEFLON" (or like plastic bush) for substantially zero damping, the face sectors coming into contact to provide a damping effect when the two frames are displaced a small distance from the initial preload position, the damping rate increasing with the displacement.

20. A seat slide assembly for vehicles including:

a fixed slide mountable on a vehicle and having an upstanding flange formed with notches or slots;

a movable slide supported by roller and/or ball means movable along the fixed slide;

latch means on the movable slide releasably engageable with the notches or slots on the fixed slide; and

respective flange means on the slides in overlapping arrangement to prevent disengagement of the slides if the slides undergo a relative twisting action.

21. A seat slide assembly according to Claim 20 wherein:

the latch means are spring loaded towards engagement with the notches or slots, the latch means being movable towards a disengaged position by a release plate pivotally mounted on the movable slide and operable by a linkage from a remote handle.

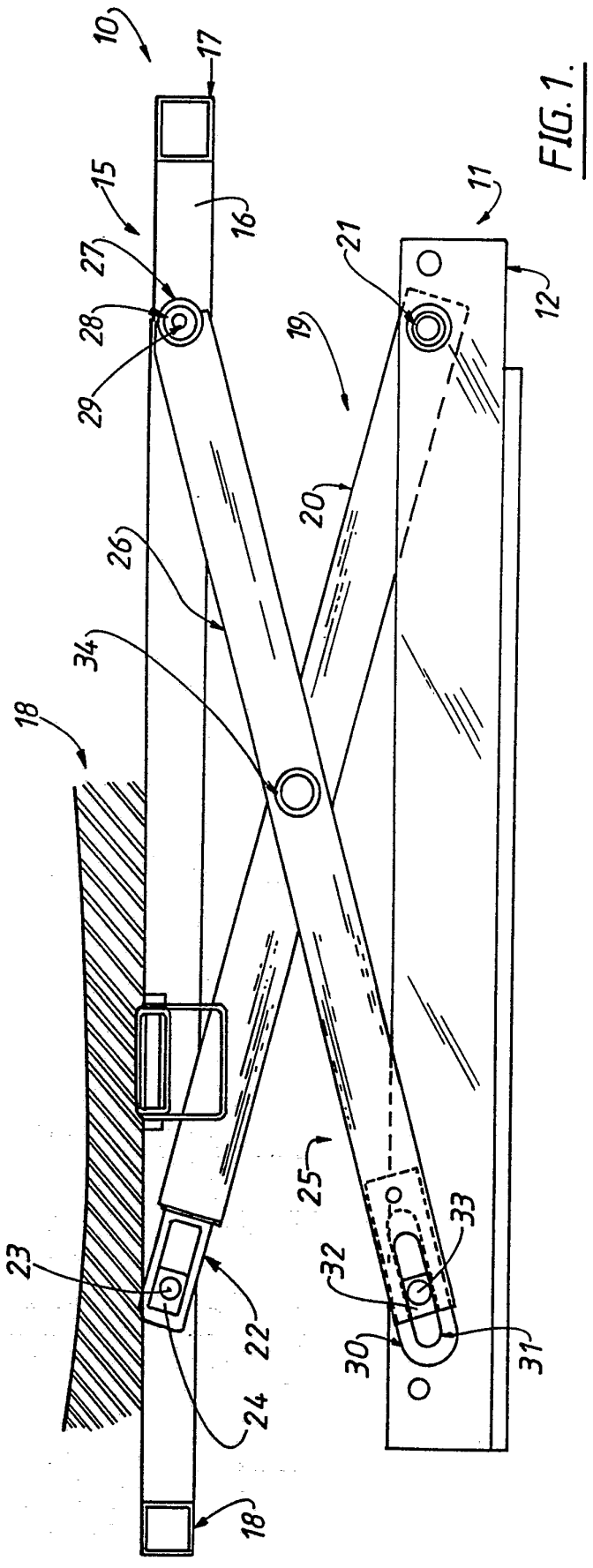
10
17
15
16
27
28
29
11
21
19
12
20
26
34
18
25
33
32
30
31
23
22
24
18

FIG. 1.

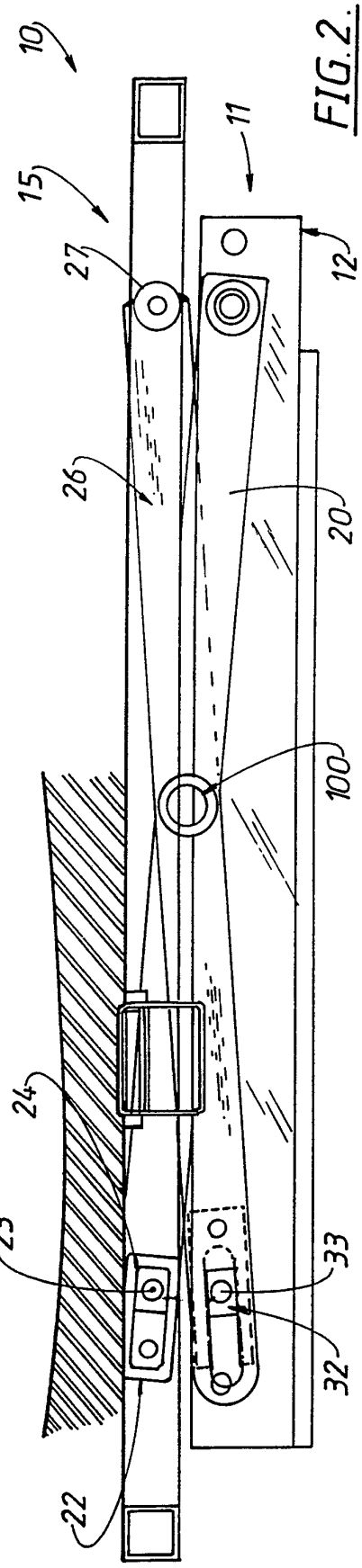
10
11
15
27
12
26
20
100
24
23
33
32
22

FIG. 2.

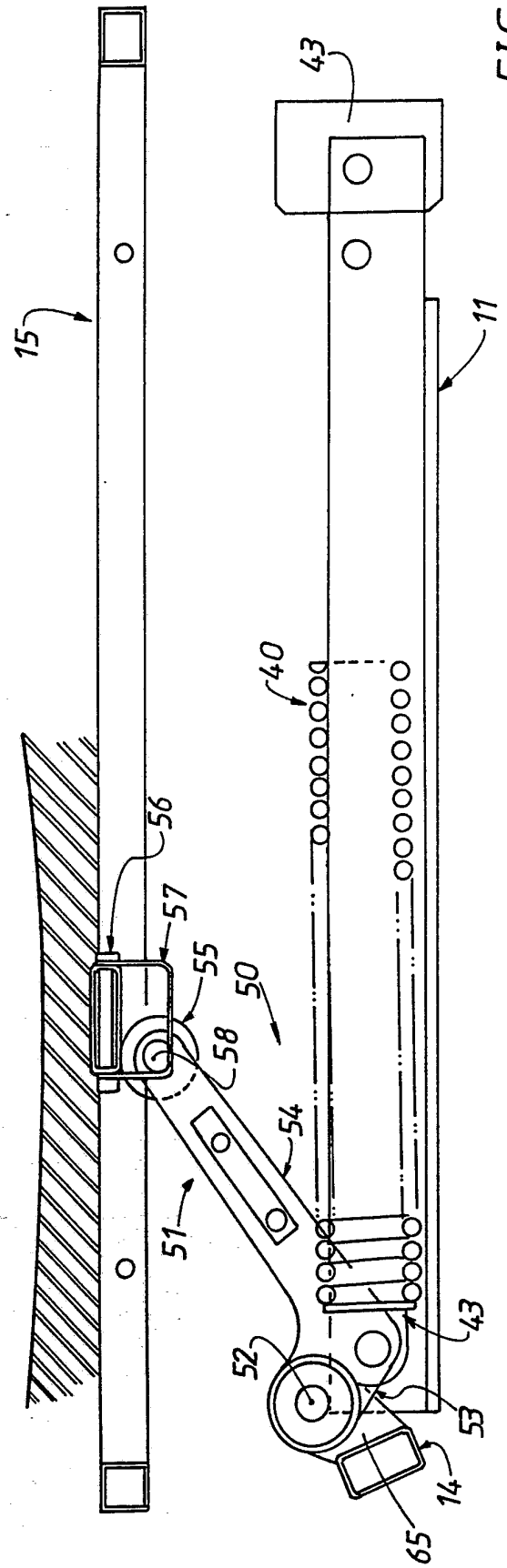

FIG. 3.

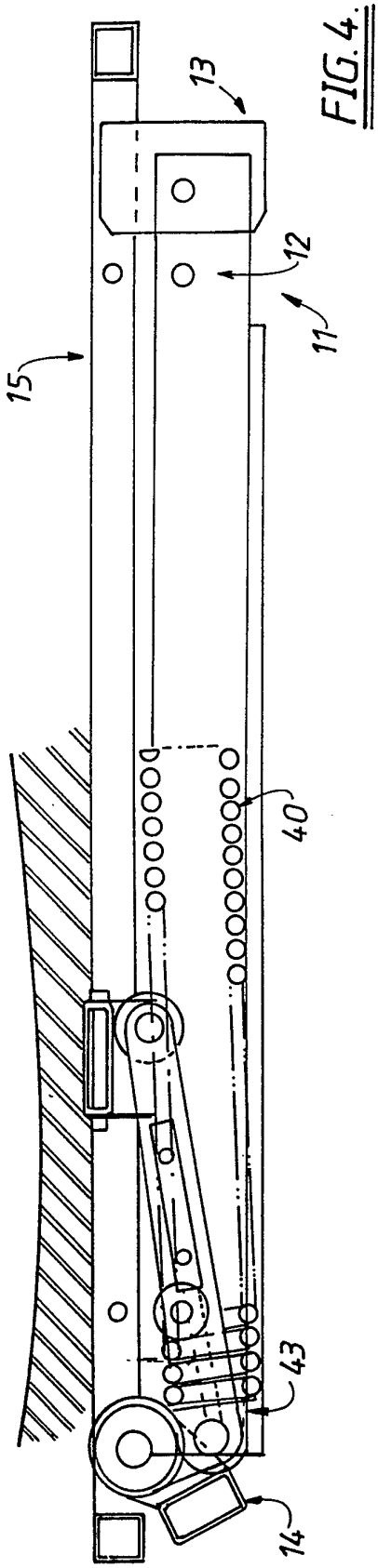

FIG. 4.

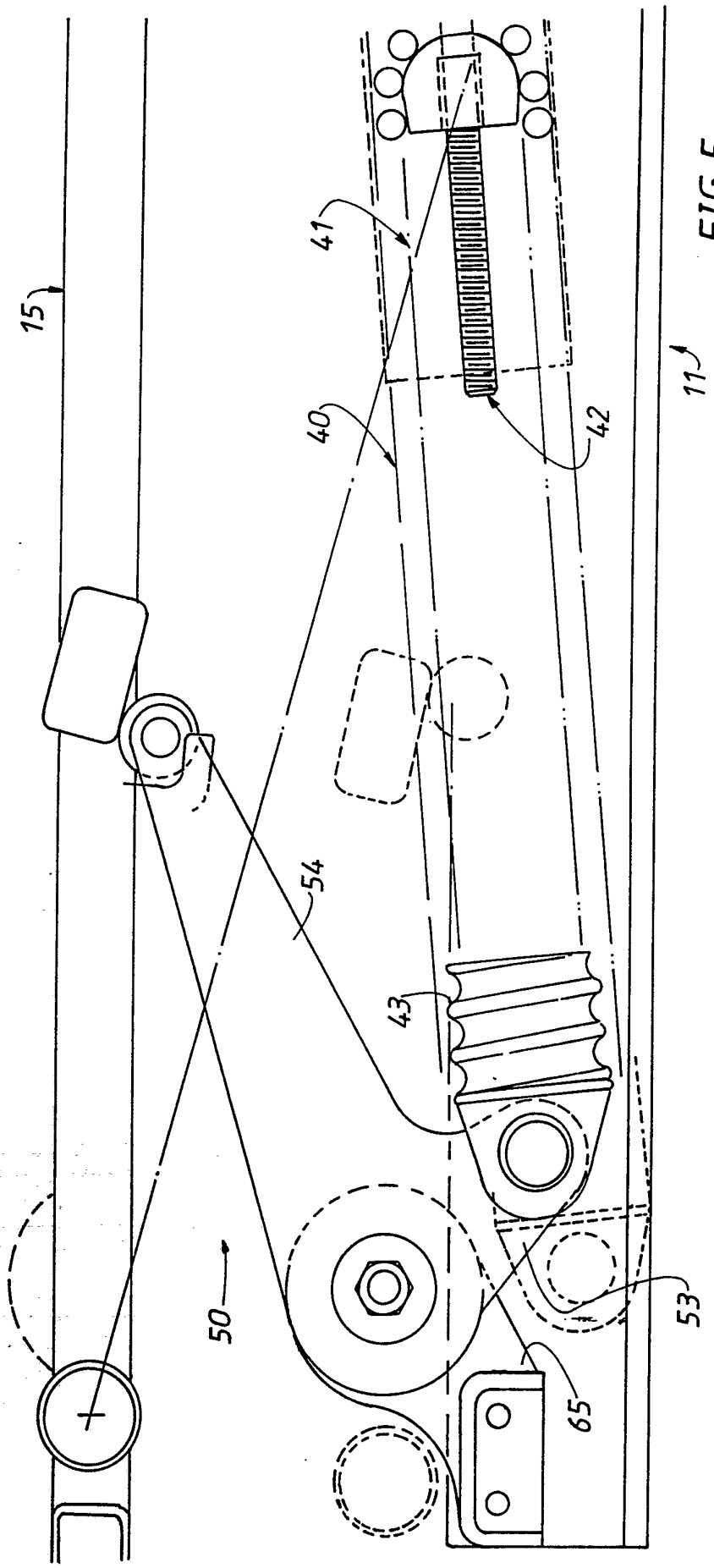

FIG.5.

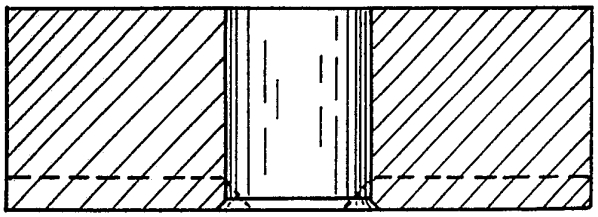

FIG.7.

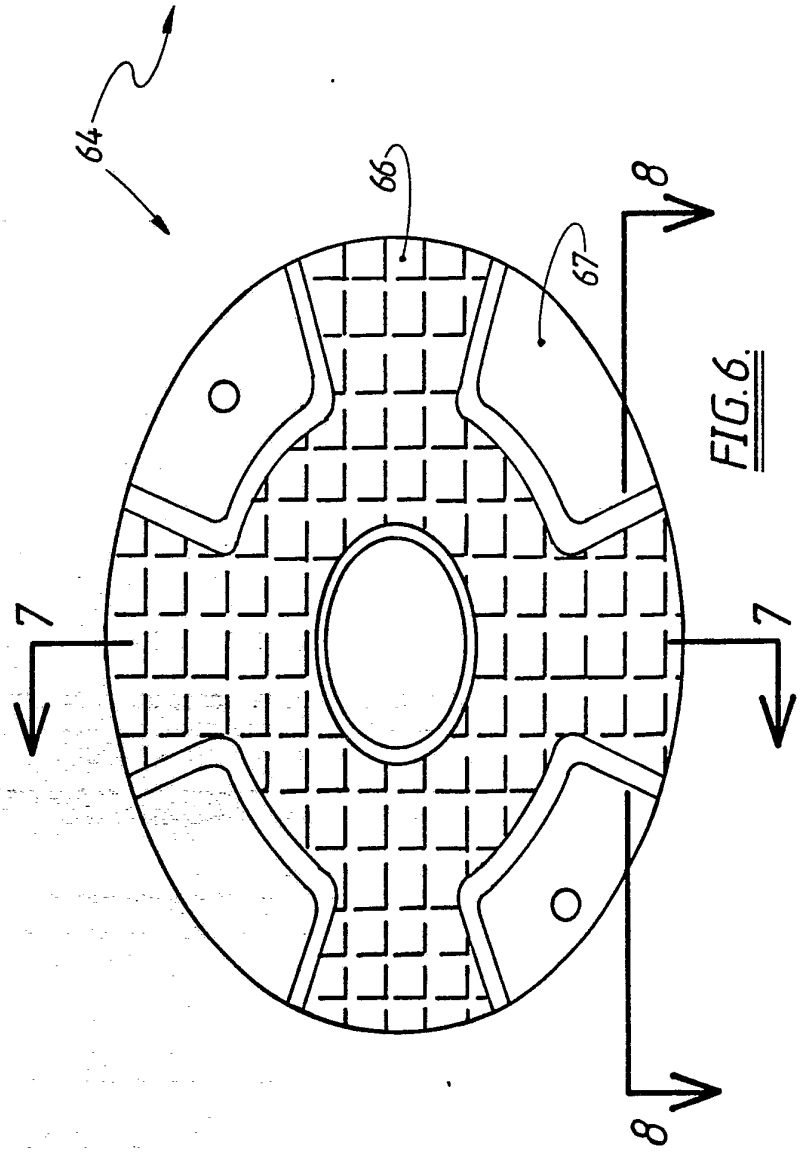

FIG.6.

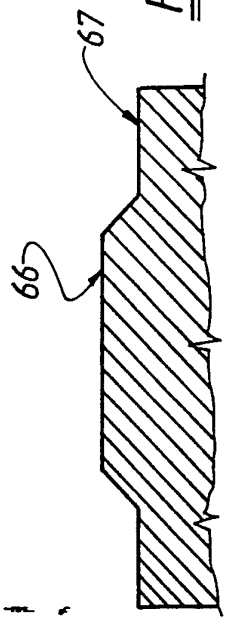

FIG.8.

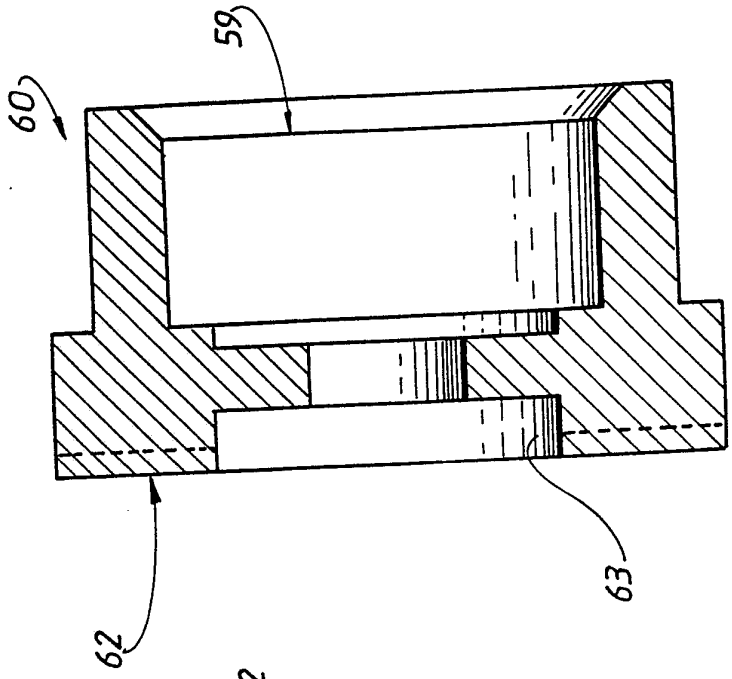

FIG. 10.

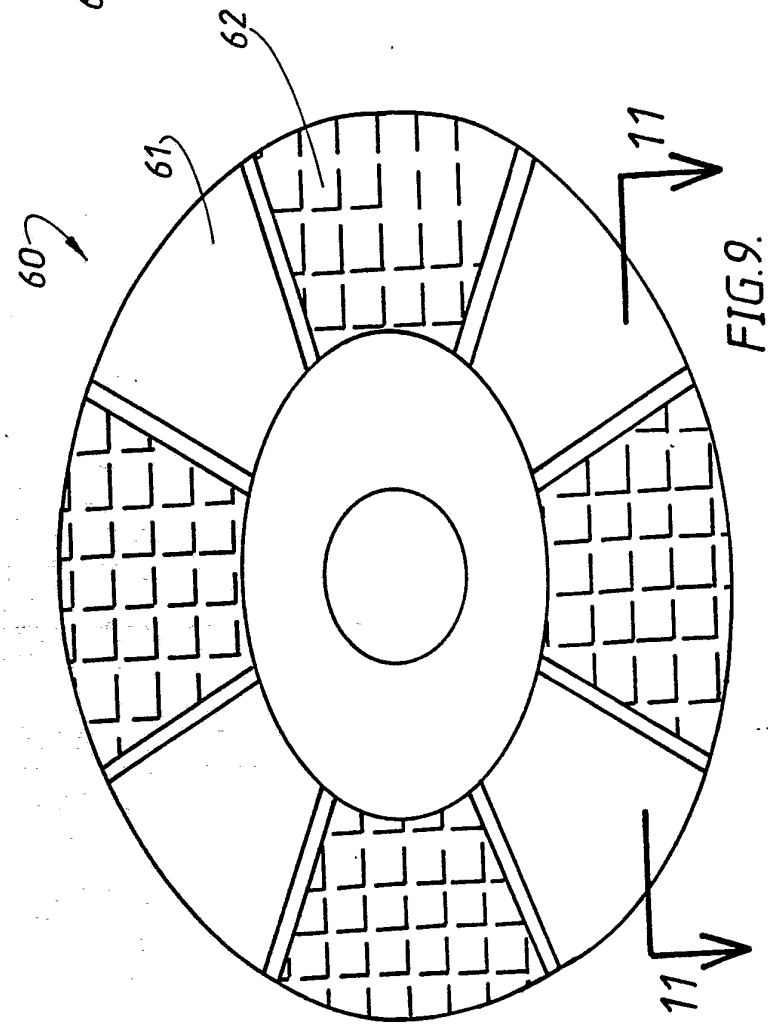

FIG.9.

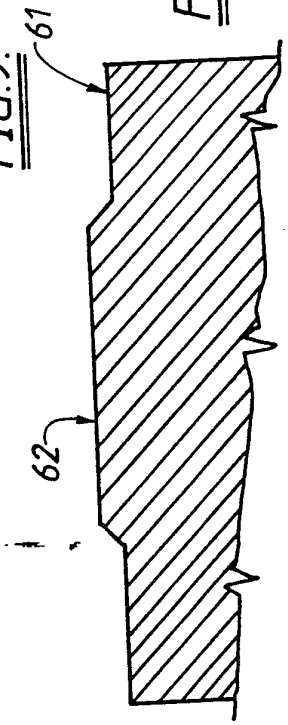

FIG.11.

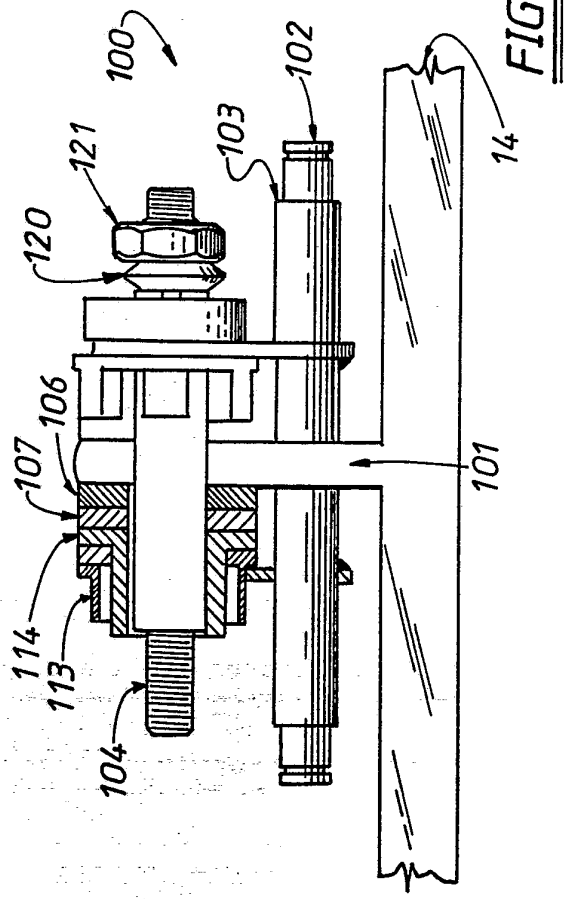
100
102
103
121
120
14
106
107
101
114
113
104

FIG. 12.

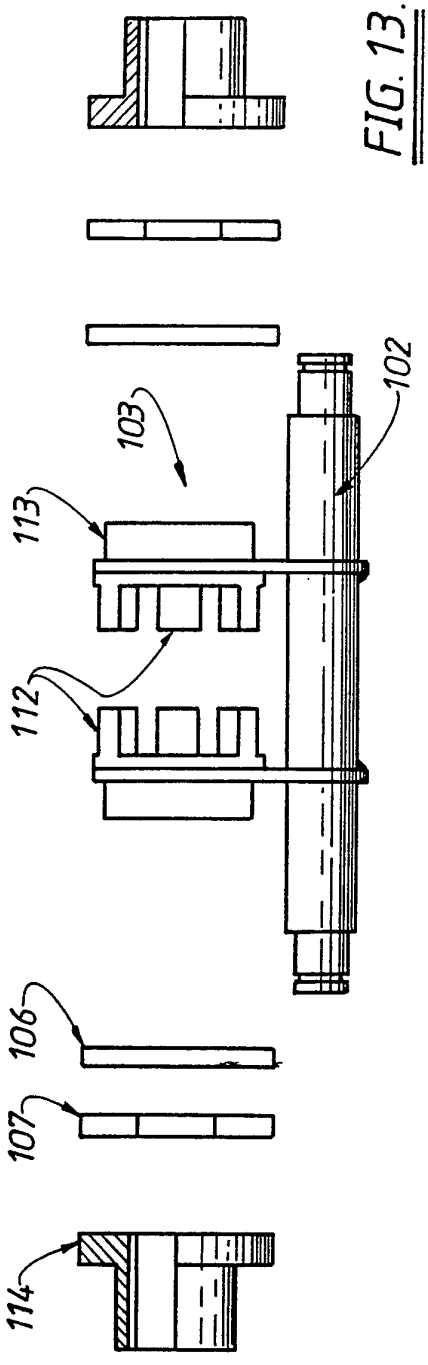
102
103
113
112
106
107
114

FIG. 13.

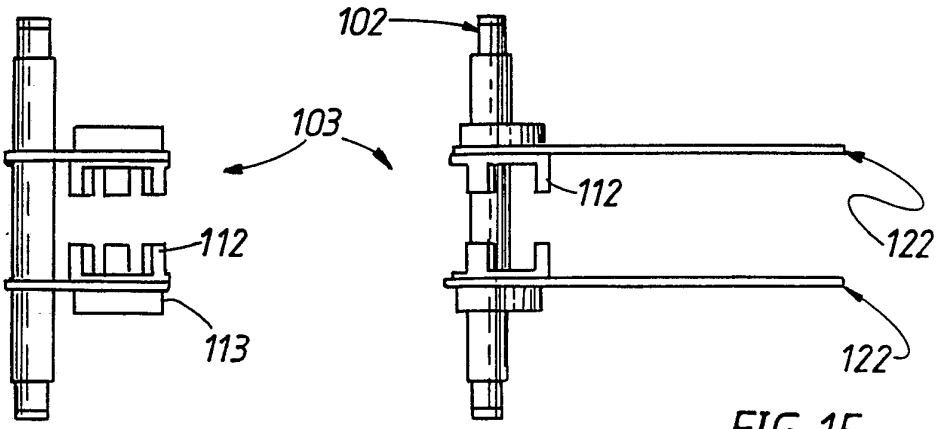

FIG. 16.

FIG. 15.

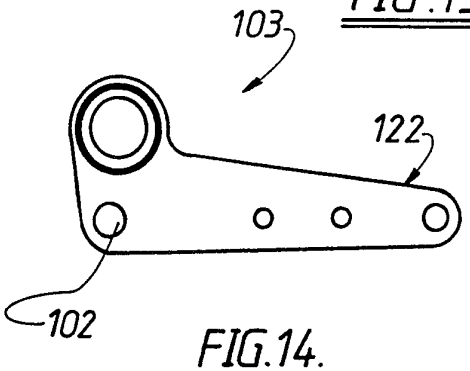

FIG. 14.

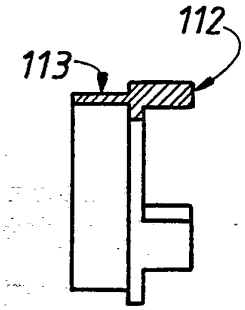

FIG. 17.

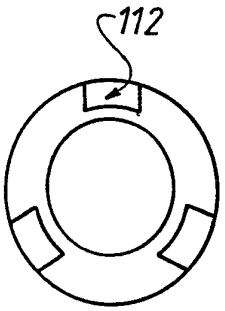

FIG. 18.

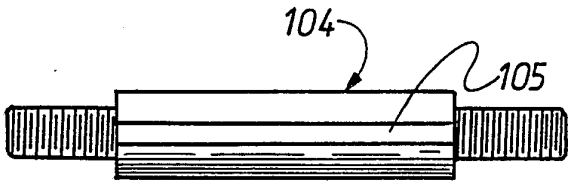

FIG.19.

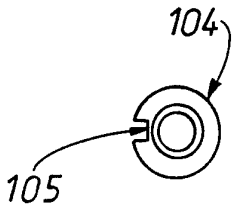

FIG.20.

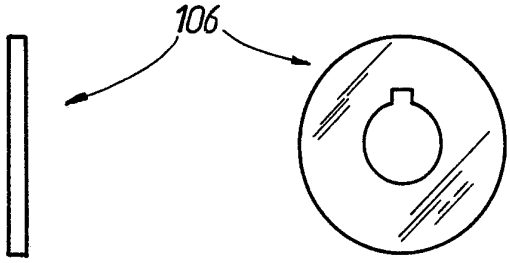

FIG.21.

FIG.22.

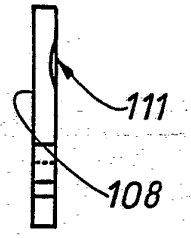

FIG.24.

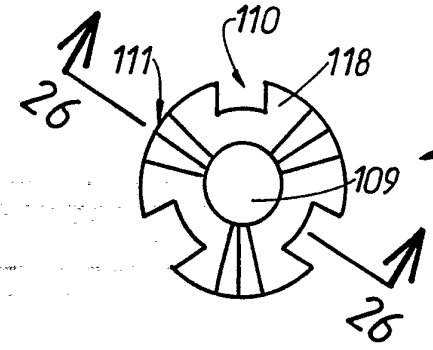

FIG.23.

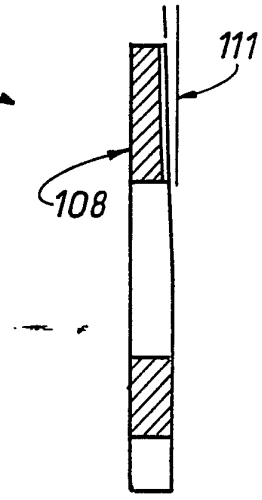

FIG.26.

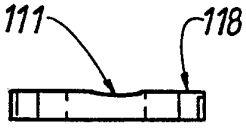

FIG.25.

SUBSTITUTE SHEET

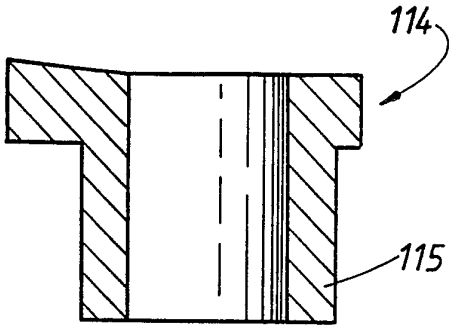

FIG. 30.

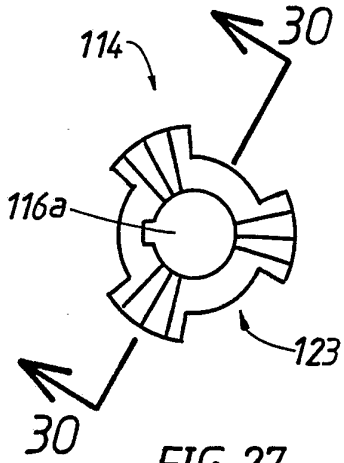

FIG. 27.

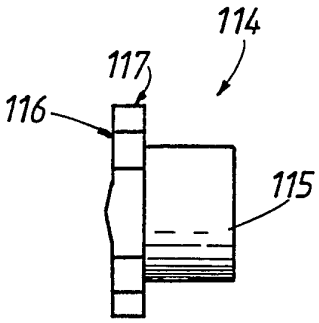

FIG. 28.

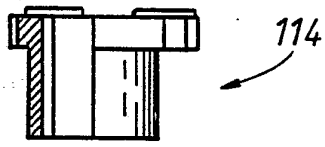

FIG. 29.

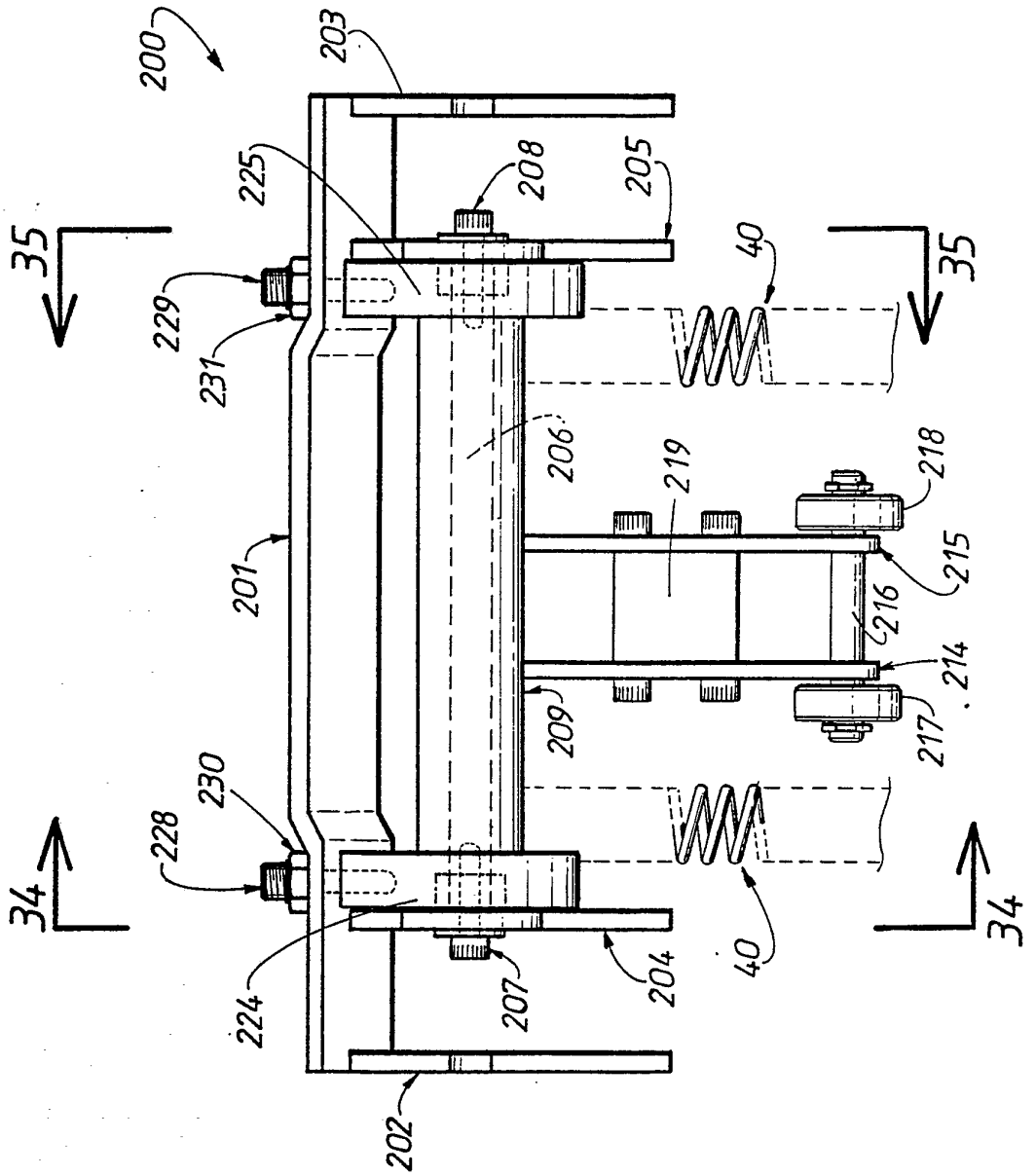
200
203
225
208
205
35
35
40
229
231
206
219
218
201
215
216
214
209
217
230
228
34
34
224
207
204
40
202

FIG. 31.

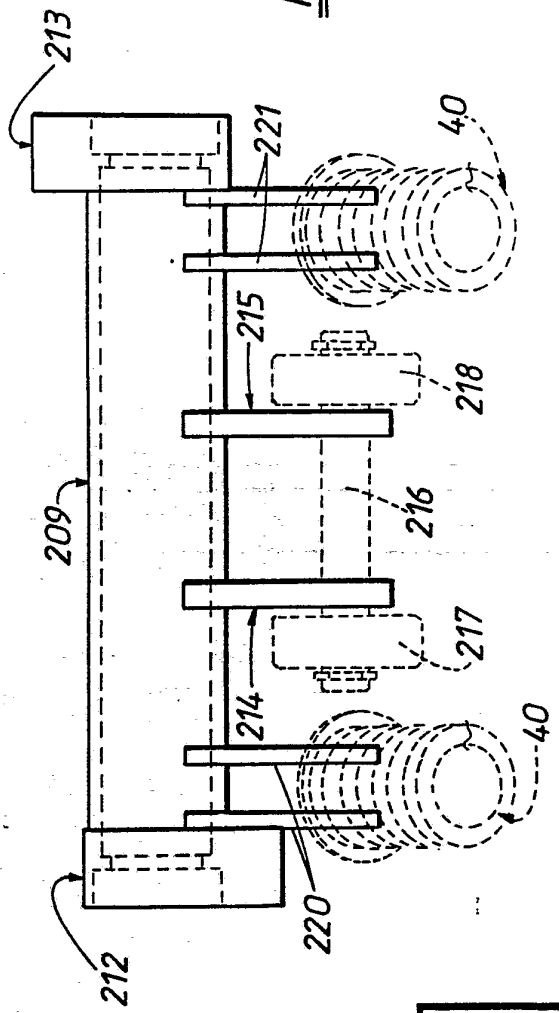
213
221
40
215
218
209
216
217
214
40
220
212

FIG.32.

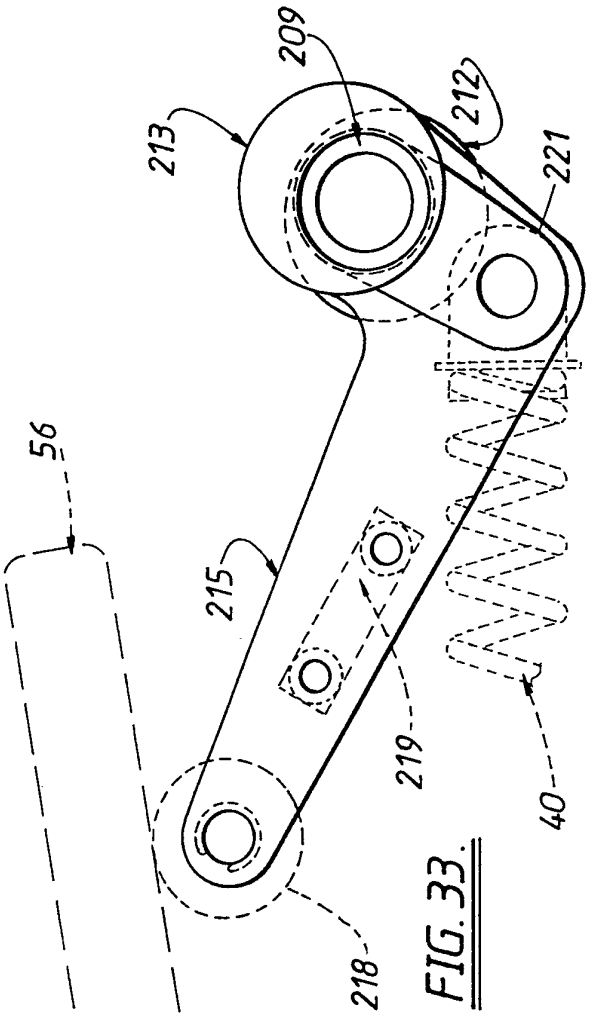
209
213
212
221
56
215
219
40
218

FIG. 33.

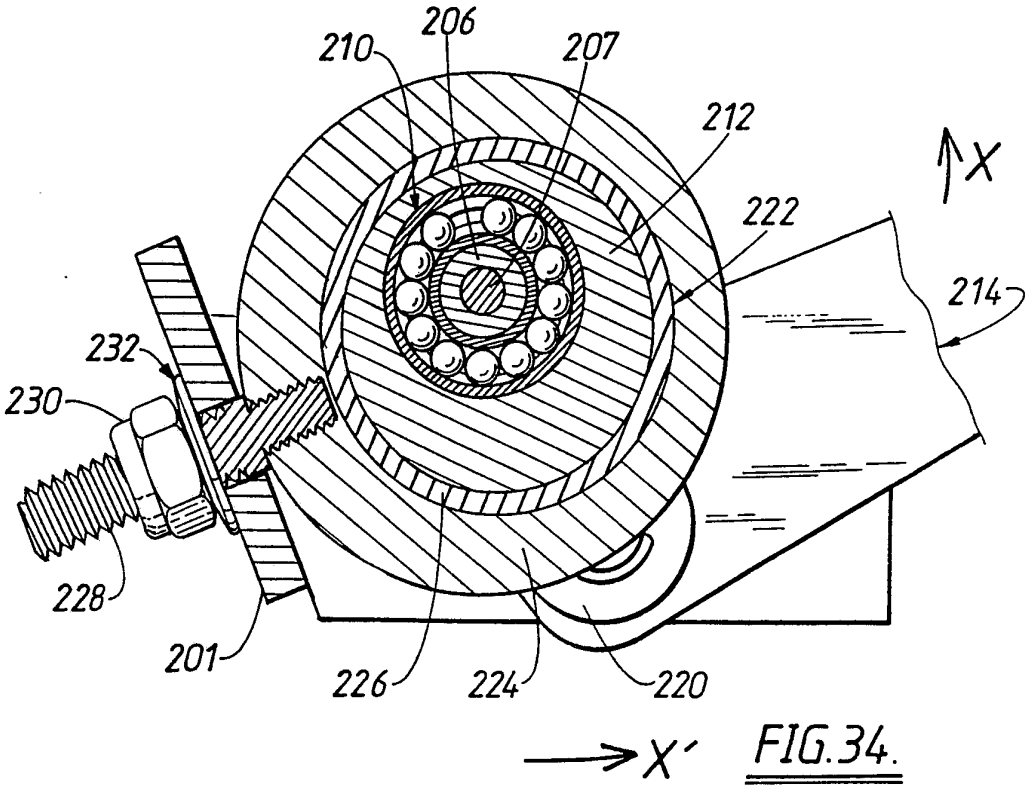
210
206
207
212
X
222
214
232
230
228
201
226
224
220
X'

FIG.34.

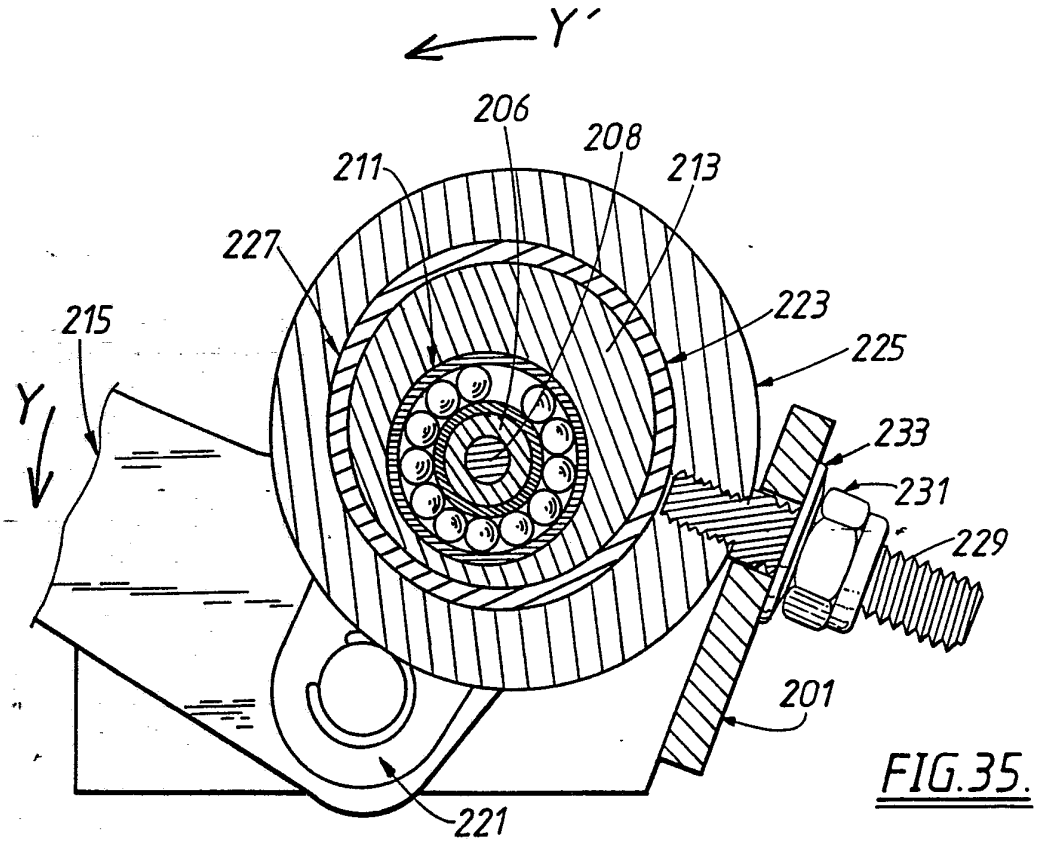
Y'
206
208
211
213
227
215
223
225
Y
233
231
229
201
221

FIG.35.

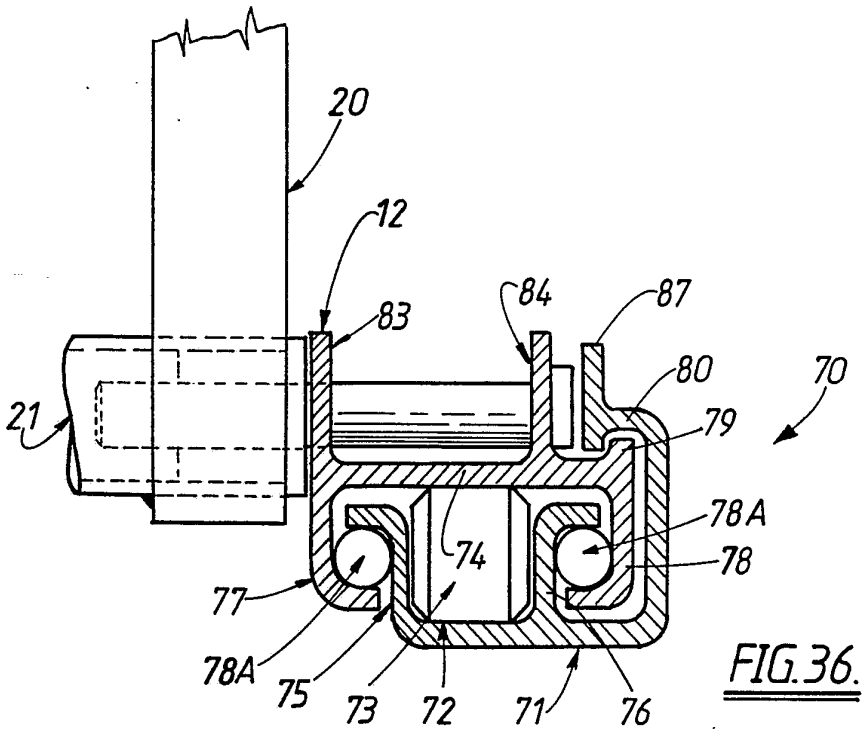

FIG.36.

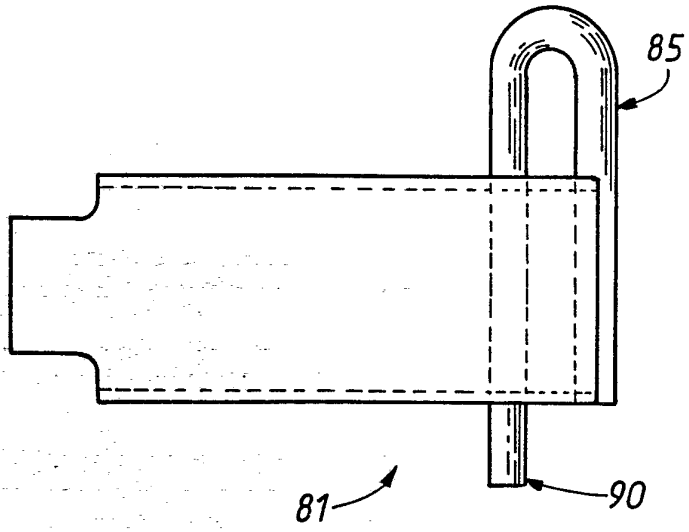

FIG.39.

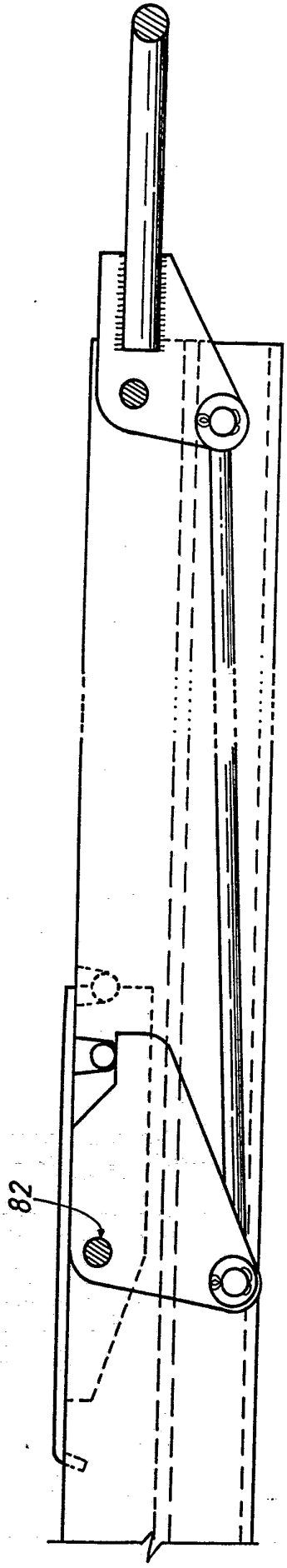

FIG. 37.

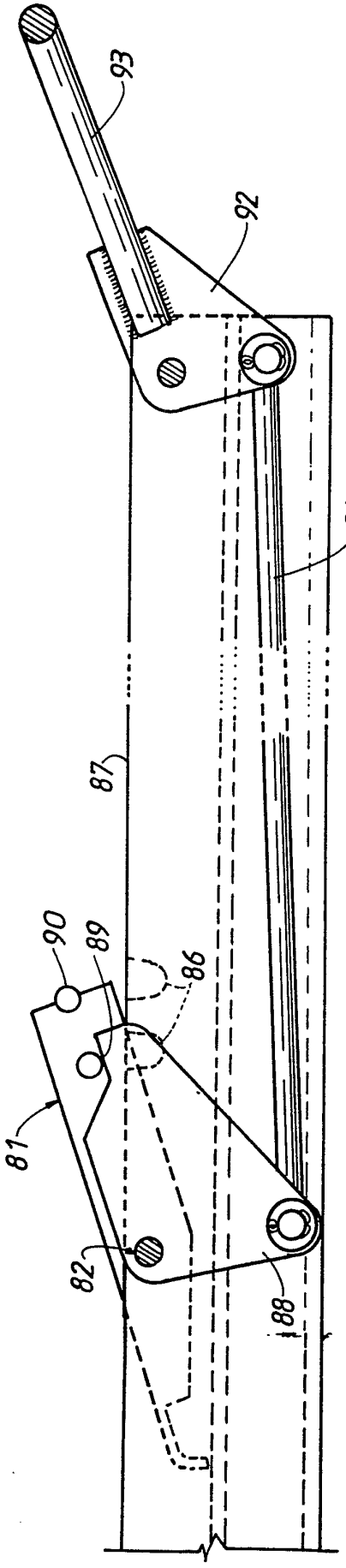

FIG. 38.

INTERNATIONAL SEARCH REPORT

International application No.
PCT/AU92/00647

A. CLASSIFICATION OF SUBJECT MATTER
Int. Cl.[5] B60N 2/54, 2/08

According to International Patent Classification (IPC) or to both national classification and IPC

B. FIELDS SEARCHED

Minimum documentation searched (classification system followed by classification symbols)
IPC B60N 2/54, 1/02, 2/08, 1/08

Documentation searched other than minimum documentation to the extent that such documents are included in the fields searched
AU: IPC as above

Electronic data base consulted during the international search (name of data base, and where practicable, search terms used)
DERWENT

C. DOCUMENTS CONSIDERED TO BE RELEVANT

Category*	Citation of document, with indication, where appropriate, of the relevant passages	Relevant to Claim No.
A	AU,B,11328/75 (492724) (STURHAN) 1 September 1977 (01.09.77)	1-19
A	DT,A,2335816 (WANSCHURA) 6 February 1975 (06.02.75)	1-19
A	DT,A,2717416 (KEIPER AUTOMOBIL TECHNIK GmbH & Co. KG) 2 November 1978 (02.11.78)	1-19
A	DE,A,3146289 (KEIPER AUTOMOBIL TECHNIK GmbH & Co. KG) 26 May 1983 (26.05.83)	1-19

[X] Further documents are listed in the continuation of Box C.

[X] See patent family annex.

* Special categories of cited documents :

"A" document defining the general state of the art which is not considered to be of particular relevance
"E" earlier document but published on or after the international filing date
"L" document which may throw doubts on priority claim(s) or which is cited to establish the publication date of another citation or other special reason (as specified)
"O" document referring to an oral disclosure, use, exhibition or other means
"P" document published prior to the international filing date but later than the priority date claimed
"T" later document published after the international filing date or priority date and not in conflict with the application but cited to understand the principle or theory underlying the invention
"X" document of particular relevance; the claimed invention cannot be considered novel or cannot be considered to involve an inventive step when the document is taken alone
"Y" document of particular relevance; the claimed invention cannot be considered to involve an inventive step when the document is combined with one or more other such documents, such combination being obvious to a person skilled in the art
"&" document member of the same patent family

Date of the actual completion of the international search	Date of mailing of the international search report
10 March 1993 (10.03.93)	17 MAR 1993 (17.03.93)
Name and mailing address of the ISA/AU AUSTRALIAN PATENT OFFICE PO BOX 200 WODEN ACT 2606 AUSTRALIA Facsimile No. (06) 2853929	Authorized officer C.M. WYATT Telephone No. (06) 2832538

C(Continuation). DOCUMENTS CONSIDERED TO BE RELEVANT		
Category*	Citation of document, with indication, where appropriate of the relevant passages	Relevant to Claim No.
X	AU,B,72122/74 (499109) (BROWN BROS. ENGINEERING LTD.) 12 February 1976 (12.02.76) page 2a, lines 3-18; page 5, lines 12-24 and figs. 2 and 3	20-21
X	AU,A,33951/78 (BROWN BROS. ENGINEERING LTD.) 13 September 1979 (13.09.79) page 6, lines 1-12; page 7, lines 5-23 and figs. 1, 2 and 4	20-21
X	AU,B,34286/78 (513025) (GENERAL MOTORS CORP.) 27 September 1979 (27.09.79) page 2, line 17 - page 3, line 10 and figs. 4-6	20
X	DT,A,2559653 (C. RoB. HAMMERSTEIN GmbH) 30 June 1977 (30.06.77) figs. 1-4	20
X	EP,A,0209615 (FUJI KIKO CO. LTD.) 28 January 1987 (28.01.87) whole document	20-21
X	EP,A,0368735 (A. & M. COUSIN ETABLISSEMENTS) 16 May 1990 (16.05.90) abstract and figs.	20-21
X	GB,A,2221245 (IKEDA BUSSAN CO. LTD.) 31 January 1990 (31.01.90) whole document	20-21

Box I **Observations where certain claims were found unsearchable (Continuation of Item 1 of first sheet)**

This international search report has not established in respect of certain claims under Article 17(2)(a) for the following reasons:

1. ☐ Claims Nos.:
because they relate to subject matter not required to be searched by this Authority, namely:

2. ☐ Claim Nos.:
because they relate to parts of the international application that do not comply with the prescribed requirements to such an extent that no meaningful international search can be carried out, specifically:

3. ☐ Claims Nos.:
because they are dependent claims and are not drafted in accordance with the second and third sentences of Rule 6.4(a).

Box II **Observations where unity of invention is lacking (Continuation of item 2 of first sheet)**

This International Searching Authority found multiple inventions in this international application, as follows:

Claims 1 to 14 are directed to a seat suspension unit incorporating two frames and damping means between them capable of applying a variable damping rate proportional to the relative displacement of the two frames. Claims 15, 18 and 19 are directed to a damping means arranged to apply a damping rate proportional to the relative displacement of the frames. It is this damping means which is a common technical feature and forms the technical relationship between claims 1, 15, 18 and 19.

Claims 20 to 21 are directed to a seat slide assembly consisting of a fixed slide, a moving slide, latch means to lock their relative position, and flange means on each slide to prevent twisting disengagement.

Since claim 20 does not contain the damping means defined in the other independent claims, a technical relationship as defined in PCT Rule 13.2 does not exist between these two groups of claims. Accordingly, the international application does not relate to one invention or to a single inventive concept.

1. ☒ As all required additional search fees were timely paid by the applicant, this international search report covers all searchable claims

2. ☐ As all searchable claims could be searched without effort justifying an additional fee, this Authority did not invite payment of any additional fee.

3. ☐ As only some of the required additional search fees were timely paid by the applicant, this international search report covers only those claims for which fees were paid, specifically

claims Nos.:

4. ☐ No required additional search fees were timely paid by the applicant. Consequently, this international search report is restricted to the invention first mentioned in the claims; it is covered by claims Nos.:

Remark on Protest

☐ The additional search fees were accompanied by the applicant's protest.

☒ No protest accompanied the payment of additional search fees.

This Annex lists the known "A" publication level patent family members relating to the patent documents cited in the above-mentioned international search report. The Australian Patent Office is in no way liable for these particulars which are merely given for the purpose of information.

Patent Document Cited in Search Report	Patent Family Member					
AU 11328/76	AR	205506	AT	1431/76	BR	7601205
	CA	1059419	DE	2508186	ES	445272
	FR	2302208	GB	1494296	IT	1056640
	JP	51108427	SE	7602321	TR	19383
	US	3984078	YU	436/76	ZA	7601015
AU 72122/74	DE	2437499	GB	1483179	IT	1017935
	JP	50071022	SE	7409916	US	3926397
AU 33951/78	BE	865158	DE	2811970	ES	468850
	FR	2384647	GB	1602844	IT	1093621
	JP	53121326	SE	7803229	US	4238099
AU 34286/78	DE	2812322	US	4065178		
EP 386735	JP	2206743	US	5040775		
GB 2221245	JP	1272252	FR	2634699	DE	3911165
	US	4949932				