Aug. 22, 1933. M F. REED 1,923,395

APPARATUS FOR MAINTAINING VACUUM IN OIL WELLS OR THE LIKE

Filed July 29, 1932

Fig. 1

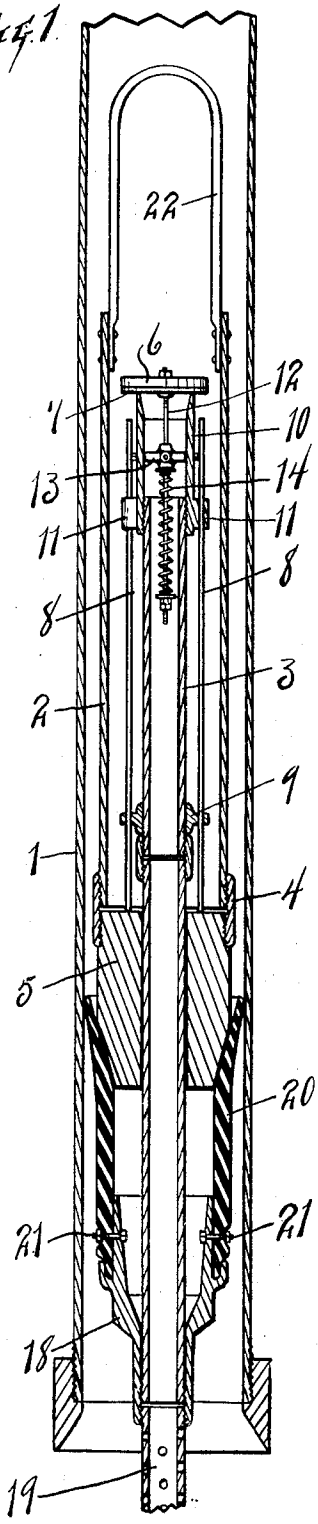

Fig. 2

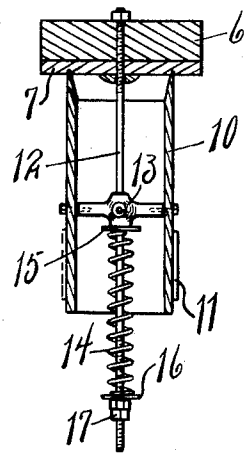

Fig. 3

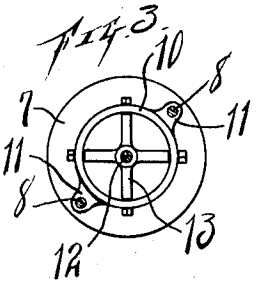

Fig. 4

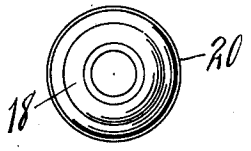

Fig. 5

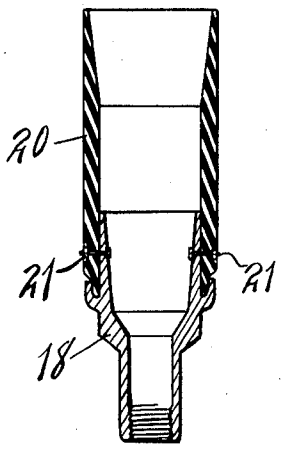

INVENTOR

M. F. REED.

BY Ernest G. Hood

ATTORNEY

Patented Aug. 22, 1933 1,923,395

UNITED STATES PATENT OFFICE

1,923,395

APPARATUS FOR MAINTAINING VACUUM IN OIL WELLS OR THE LIKE

M Frankness Reed, Stephensville, Tex.

Application July 29, 1932. Serial No. 625,794

6 Claims. (Cl. 103—229)

This invention relates to oil well equipment and particularly to a vacuum maintainer for oil wells adapted to use in connection with a swab and its principal object is to provide a device capable of maintaining a vacuum in an oil well to decrease the cost ordinarily incident to swabbing operations and reduce the amount of lift ordinarily made necessary by the use of common swabs.

Another object of the invention resides in the provision of a combination of elements capable of placement in an oil well at various depths whereby the oil may be drawn from the earth without the constant use of swabs and thereby making it possible to increase the production of certain wells with attendant reduction in the expense ordinarily incident to such increased production due to the long lift so often required.

Still another object of the invention resides in the provision of a simple, inexpensive mechanism which is capable of operation from the surface of the well yet may be placed at any desired point in the casing along the entire depth of the same to provide an impregnable seal to prevent the passage of air into the casing below the point of seal thereby creating a vacuum and a constant pull on the oil sands adjacent to the bottom of an oil well to draw therefrom such oil as may be deposited therein.

Broadly the invention comprehends the provision of a mechanism which by its use, will reduce to a minimum the operations commonly required to produce oil from wells wherein it is difficult to draw the oil from the sands thus obtaining production from wells thought to be non-producers, yet with such little expense as to make them pay even through such production is greatly minimized.

While the foregoing objects are paramount other and lesser objects will become manifest as the description preceeds taken in connection with the appended drawing wherein:

Figure 1 is a vertical cross section of a fragment of an oil well casing showing the invention therein.

Figure 2 is an enlarged cross sectional view of the valve mechanism.

Figure 3 is a plan view of the valve mechanism with the cap removed.

Figure 4 is an inverted plan view of the invention, and

Figure 5 is a cross sectional view of the vacuum retaining element of the invention.

Ordinary swab operations necessitate the lowering of the swab to a great depth into an oil well before, upon bringing it to the surface, a proper vacuum can be provided below it to produce sufficient suction to draw petroleum from the earth. This is especially true where, due to certain earth formations, the oil does not of its own accord seep through the sands into the hole.

The purpose therefore, of this invention is to eliminate, as much as possible, the necessity for the use of the swab in creating a sufficient vacuum to produce these results.

Proceeding with the description attention is again directed to the drawing and to the numerical character 1, which represents an oil well casing into which is inserted a bucket 2, which latter has a tube 3 therein, the purpose of which will be later described.

The bucket 2 is threaded at its lower end into a sleeve 4, which latter is also threaded upon a casting 5 which forms a weighted bottom for said bucket 2 and which although substantially cylindrical in shape, has a conical lower portion and a passage through its center through which the tube 3 is passed as shown in Figure 1.

A valve assembly is provided within the bucket 2 and is threaded upon the upper end of the tube 3. The valve assembly comprises a cap 6 of wood, or similar material, and has a seat 7 of fiber, or the like, as shown in Figure 1. The said cap 6 is operated by rods 8 which latter are arranged vertically on either side of the tube 3 and held upright for free vertical movement within the ears of a collar 9. These ears provide guides for the rods 8 as shown in Figure 1.

When the valve assembly is closed, as apparent in Figure 1, the seat 7 rests upon the upper end of a sleeve 10 which is threaded, at its lower end, upon the tube 3, and has lugs 11 through which are apertures which latter also guide the vertical movement of the rods 8.

The valve is provided with a stem 12 which passes through a stationary spider 13 mounted in the sleeve 10 and acts as a guide to the valve seat 7 and to prevent its displacement.

As shown in Figure 2, a coil spring 14 is provided which is arranged upon the lower end of the stem 12, bearing against a washer 15 beneath the spider 13 and a second washer 16 held upon the lower end of the stem 12 by means of nuts 17. This arrangement obviously provides for a variable tension upon the valve seat 7 since, by reason of the nuts 17, the tension may be increased or lessened as desired.

Referring now to Figures 1 and 5, attention is directed to the member 18 which has a neck portion at its base into which is threaded a per-

forated intake pipe 19, shown in Figure 1, and the tube 3 which latter extends upward through the casting 5, previously referred to, and into the bucket 2.

The member 18 is provided with an annular upturned flange forming a groove around its outer periphery to receive the lower rim of a cylindrical packer 20, of rubber or similar material, being substantially funnel shaped within the top portion to admit the casting 5 which is conical in shape at its lower end as shown in Figure 1. The casting 5, due to its weight and its conical shape, will spread the upper portion of the packer 20 to frictionally engage the walls of the casing 1 to create a seal and prevent the passage of air into the lower portion of the said casing 1. The packer 20 is affixed to the member 18 by means of bolts or rivets 21.

Accordingly, in operation, the assembly is lowered into the casing 1 by a cable or chain attached to the bail 22 of the bucket 12. The extended flanges of the packer 20 frictionally engage the sides of the casing thereby holding the assembly suspended within the latter as indicated in Figure 1, and, with this accomplished, a swab (not shown) is lowered into the casing above the invention and operated to draw a vacuum in the said casing 1 through the tube 3 and valve assembly at the top of the latter. The perforated tubing 19 is adapted to rest upon the bottom of the well and the assembly operates in the shoe joint of the casing 1.

It is obvious that, when the swab is drawn upward, the suction will draw the oil from the bottom of the well through the tube 3 and valve assembly, and as soon as the suction or vacuum is released beneath the swab, the valve 6 will close itself by reason of the spring 14 and thereby create a suction or vacuum beneath the invention whereby the oil is constantly drawn out of the sand and maintained at a predetermined level where it can be brought to the surface by a minimum of effort.

When it is desired to remove the assembly from the casing 1, the bucket 2 is drawn upward by a cable, or other suitable means attached to the bail 22, whereupon the conical casting 5 is withdrawn from the packer 20, contracting the same and releasing the vacuum in the casing 1 and, at the same time, in its movement upward, the casting 5 will come into contact with the rods 8, pushing them upward against the valve seat 7, raising the latter, to allow the air to enter the tube 3 thereby releasing any vacuum which might remain therein after the seal is broken around the extended flanges of the packer 20.

Though the invention has been described with great particularity, it is understood that it is not intended that the same shall be limited to the specific arrangement and construction of parts and that modifications may be resorted to from time to time as may fall within the scope and meaning of the appended claims.

What is claimed is:

1. A device for maintaining a vacuum in an oil well including a bailed bucket having a weighted conical bottom, a tube therein, a valve assembly mounted upon the upper end of said tube, a flexible cylindrical packer secured adjacent to the lower portion of the said bucket capable of expansion by the said conical bottom to assume a substantially funnel shape thereby to afford a seal within an oil well casing and means to withdraw the said conical bottom to cause the contraction of the said packer to break the said seal.

2. In a device for maintaining a vacuum in an oil well including a bailed tubular element having a substantially conical shaped weighted bottom, a second tubular element extending through the said first named tubular element, a valve assembly threaded upon the upper end of said second tubular element, a flexible packer member secured adjacent the bottom of the first named tubular element capable of receiving the said conical bottom to expand the said packer member to frictionally engage the walls of an oil well casing to afford a seal therearound and means to operate the said valve assembly.

3. Apparatus for maintaining a vacuum in an oil well casing comprising a bailed bucket member having a substantially conically shaped apertured base, a tube within said bucket member and arranged through said apertured base having a valve assembly thereon, a flexible packer arranged near the bottom of said bucket member capable of receiving the said conical base and expanding to frictionally engage the walls of an oil well casing and means to actuate said valve assembly.

4. A device for maintaining a vacuum within an oil well casing comprising a bailed outer casing having an apertured base, a tubular member within said bailed casing capable of free movement through said apertured base having a valve assembly mounted thereon, an expansible packer member arranged upon said tubular element and capable of receiving the lower portion of the said apertured base to cause the said expansible packer to frictionally engage the walls of said oil well casing and to afford a seal and means to operate said valve assembly.

5. An apparatus for maintaining a vacuum within an oil well casing comprising a bailed cylindrical member having a substantially conically shaped apertured base, a tubular member arranged within said bailed cylindrical member and said base and capable of vertical movement therein, a valve assembly mounted upon said tubular member, an expansible packer secured to the said tubular member adjacent the said base and capable of receiving the latter to expand the said packer so that the latter will frictionally engage the walls of said oil well casing to create a seal therearound and means to break the said seal.

6. In a device for maintaining a vacuum in an oil well casing including a bailed bucket member having a conical base, a tubular member within said bucket member having a valve assembly mounted thereon, an expansible packer arranged upon the said tubular member adjacent the said base to receive the latter to expand the said packer member to a substantially funnel shape so that the latter will frictionally engage the walls of said oil well casing to afford a seal and to maintain a vacuum thereunder and means to release said vacuum.

M FRANKNESS REED.