Office de la Propriété Intellectuelle du Canada
Un organisme d'Industrie Canada

Canadian Intellectual Property Office
An agency of Industry Canada

CA 2494977 A1 2004/02/26

(21) 2 494 977

(12) DEMANDE DE BREVET CANADIEN
CANADIAN PATENT APPLICATION

(13) A1

(86) Date de dépôt PCT/PCT Filing Date: 2003/08/14
(87) Date publication PCT/PCT Publication Date: 2004/02/26
(85) Entrée phase nationale/National Entry: 2005/02/07
(86) N° demande PCT/PCT Application No.: GB 2003/003577
(87) N° publication PCT/PCT Publication No.: 2004/016308
(30) Priorité/Priority: 2002/08/14 (0218868.8) GB

(51) Cl.Int.^{7}/Int.Cl.^{7} A61M 16/04

(71) Demandeur/Applicant:
NASIR, MUHAMMED ASLAM, GB

(72) Inventeur/Inventor:
NASIR, MUHAMMED ASLAM, GB

(74) Agent: MBM & CO.

(54) Titre : DISPOSITIF POUR VOIES AERIENNES AMELIORE
(54) Title: IMPROVED AIRWAY DEVICE

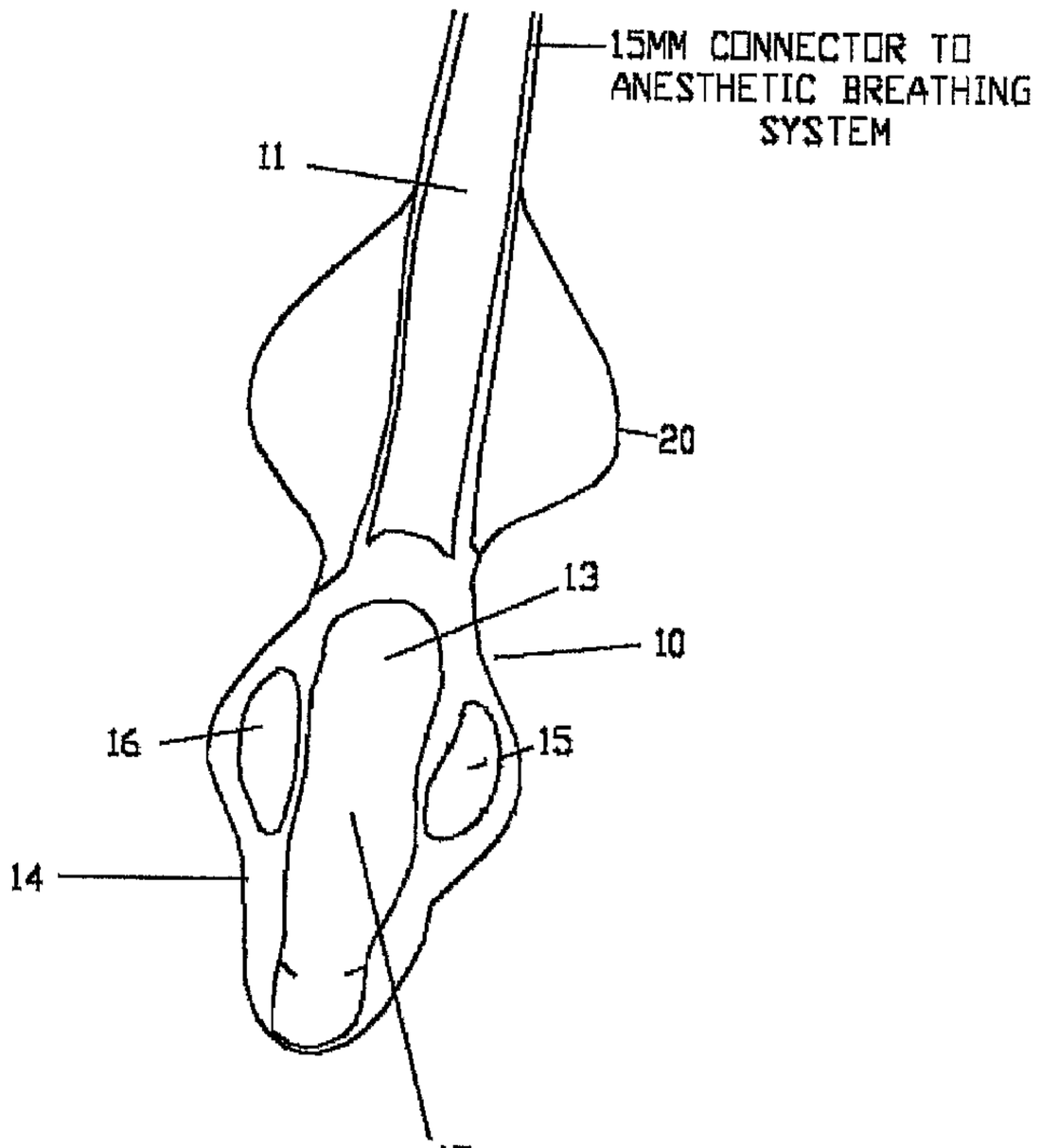

(57) Abrégé/Abstract:
An airway device (10) for human or animal use comprising an airway tube (11) having a distal end (13) and a proximal end (12), the distal end (13) of which is surrounded by a laryngeal cuff (14), adapted to fit anatomically over the laryngeal structure of a patient, characterised in that the device (10) further comprises a buccal cavity stabiliser (20) located on or around the airway tube (11) between the laryngeal cuff (14) and the proximal end of the tube, said buccal cavity stabiliser (20) being adapted to nest with the anterior aspect of the patient's tongue, the size, shape and configuration of the buccal stabiliser (20) being adapted to prevent rotational or side-to-side movement of the airway device (10) in use.

(12) INTERNATIONAL APPLICATION PUBLISHED UNDER THE PATENT COOPERATION TREATY (PCT)

(19) World Intellectual Property Organization
International Bureau

(43) International Publication Date
26 February 2004 (26.02.2004)

PCT

(10) International Publication Number
WO 2004/016308 A3

(51) International Patent Classification[7]: A61M 16/04

(21) International Application Number:
PCT/GB2003/003577

(22) International Filing Date: 14 August 2003 (14.08.2003)

(25) Filing Language: English

(26) Publication Language: English

(30) Priority Data:
0218868.8 14 August 2002 (14.08.2002) GB

(71) Applicant and
(72) Inventor: **NASIR, Muhammed, Aslam** [GB/GB]; 36 High Street, Leagrave, Luton, Bedordshire LU4 9LF (GB).

(74) Agent: **COATES, Ian, Harold**; Sommerville & Rushton, 45 Grosvenor Road, St Albans AL1 3AW (GB).

(81) Designated States *(national)*: AE, AG, AL, AM, AT, AU, AZ, BA, BB, BG, BR, BY, BZ, CA, CH, CN, CO, CR, CU, CZ, DE, DK, DM, DZ, EC, EE, ES, FI, GB, GD, GE, GH, GM, HR, HU, ID, IL, IN, IS, JP, KE, KG, KP, KR, KZ, LC, LK, LR, LS, LT, LU, LV, MA, MD, MG, MK, MN, MW, MX, MZ, NI, NO, NZ, OM, PG, PH, PL, PT, RO, RU, SC, SD, SE, SG, SK, SL, SY, TJ, TM, TN, TR, TT, TZ, UA, UG, US, UZ, VC, VN, YU, ZA, ZM, ZW.

(84) Designated States *(regional)*: ARIPO patent (GH, GM, KE, LS, MW, MZ, SD, SL, SZ, TZ, UG, ZM, ZW), Eurasian patent (AM, AZ, BY, KG, KZ, MD, RU, TJ, TM), European patent (AT, BE, BG, CH, CY, CZ, DE, DK, EE, ES, FI, FR, GB, GR, HU, IE, IT, LU, MC, NL, PT, RO, SE, SI, SK, TR), OAPI patent (BF, BJ, CF, CG, CI, CM, GA, GN, GQ, GW, ML, MR, NE, SN, TD, TG).

Published:
— *with international search report*
— *before the expiration of the time limit for amending the claims and to be republished in the event of receipt of amendments*

[Continued on next page]

(54) Title: IMPROVED AIRWAY DEVICE

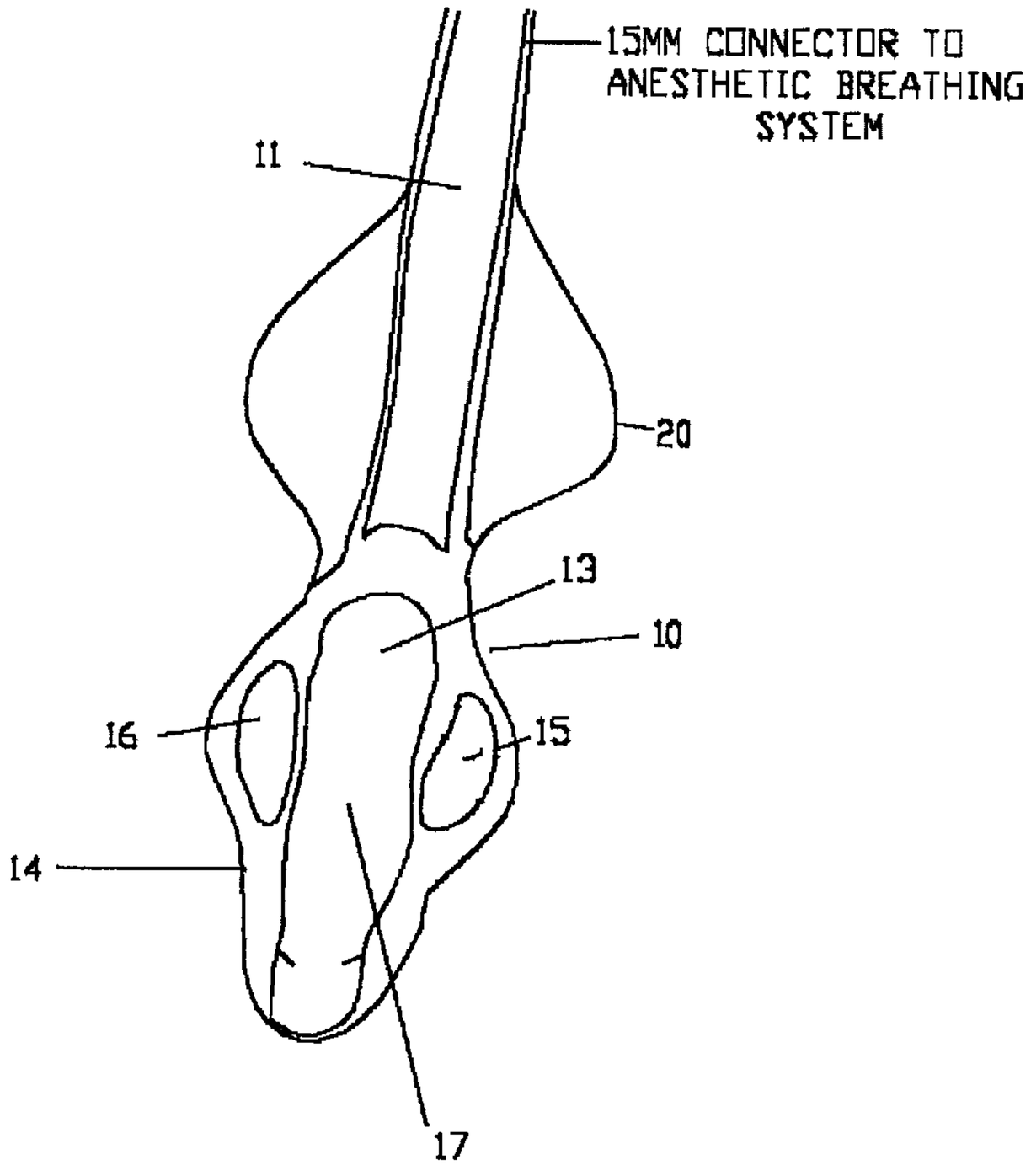

(57) Abstract: An airway device (10) for human or animal use comprising an airway tube (11) having a distal end (13) and a proximal end (12), the distal end (13) of which is surrounded by a laryngeal cuff (14), adapted to fit anatomically over the laryngeal structure of a patient, characterised in that the device (10) further comprises a buccal cavity stabiliser (20) located on or around the airway tube (11) between the laryngeal cuff (14) and the proximal end of the tube, said buccal cavity stabiliser (20) being adapted to nest with the anterior aspect of the patient's tongue, the size, shape and configuration of the buccal stabiliser (20) being adapted to prevent rotational or side-to-side movement of the airway device (10) in use.

WO 2004/016308 A3

WO 2004/016308 A3

(88) Date of publication of the international search report:
15 April 2004

For two-letter codes and other abbreviations, refer to the "Guidance Notes on Codes and Abbreviations" appearing at the beginning of each regular issue of the PCT Gazette.

Improved Airway Device

Field of the Invention

This invention relates to an anatomically oriented, simple but versatile, improved airway device. It is particularly applicable, but in no way limited, to devices used in the administration of anaesthetics to a patient breathing spontaneously during a surgical procedure. The present invention relates in particular to a laryngeal airway device. More specifically, the present invention relates to reduced cost, disposable laryngeal airway device, and to methods of fabricating such airway device.

Background to the Invention

Examples of devices currently used in spontaneously breathing anaesthetized patients, during recovering after anaesthetics, weaning of a certain group of patients in intensive care, or during resuscitation to provide a clear and hands-free airway are:-

a) Guedel airway with various types of face masks.
b) Cuffed Oro-pharyngeal airway.
c) Laryngeal Mask Airway (LMA), reinforced LMA, intubating LMA and a modified Intavent LMA for ENT and dental anaesthesia.
d) Airway Management device.
e) Combi-tube.
f) Self-retaining nasopharyngeal airway.
g) Cuffed or non-cuffed Endotracheal tubes, R.A.E. endotracheal tube.
h) Supraglottic oropharyngeal airway.
i) Tracheostomy and mini-trache tubes.
j) etc etc

All of the above mentioned devices carry significant and varying degrees of co-morbidity involving not only unacceptable concurrent physiological changes but also temporary and/or permanent anatomical/structural damage. Many cases of mortality caused directly or indirectly as a result of the use of such devices have also been reported.

Probably the most successful design variant is the inflatable laryngeal airway device, variants of which have been used to administer anaesthetic gases since 1988.

A brief history of the development of such airway device is described in a review by A I J Brain in the European Journal of Anaesthesiology 1991, Supplement 4, pages 5 to 17 inclusive. The entire text of this review is hereby incorporated by reference and is intended to form an integral part of this disclosure.

If the respiratory tree is seen as a tube terminating at the glottis, and the objective is to make a simple connection between this tube and an artificial tube for supplying gas under low pressure to the bronchial tree, it would seem logical to form a direct end-to-end junction between the two tubes. The face mask forms an end-to-end junction indeed, but with the wrong orifice, while the endotracheal tube meets the correct orifice but goes too far by penetrating into the lumen, so that the junction is effected within it, instead of at its rim. The undesirable aspects of intubation of the trachea result from the fact that, to effect a seal, pressure is applied to an epithelial surface whose important and highly specialized functions are thus compromised and that by penetration of the vocal cords, effective coughing is rendered impossible, upper-airway architecture is distorted and unwanted reflex response are not only provoked by laryngoscopy needed prior to intubation but also by presence of endotracheal tube in the trachea. Such laryngeal masks have been used in anaesthetic practice since 1988 and many reports of co-morbidity and/or mortality directly or indirectly related to their use have been reported. Complications and/or morbidity are caused by hyperinflation and extraluminal pressure impact onto the soft tissue and cartilagenous structures in contact with the hyperinflated cuff.

Several attempts have been made to improve this type of airway device but they still suffer from a number of serious inherent drawbacks. Firstly, they require inflation of the cuff to be effective and furthermore anaesthetic gas (nitrous oxide) can diffuse into the cuff, expanding the air in the cuff, thus increasing the cuff's extraluminal pressure significantly, and as a result, put considerable pressure on the sensitive tissues of Laryngopharynx. Secondly, these masks have a tendency to move from side to side or rotate about their longitudinal axis

as a force is applied to the proximinal end of the tube, attached to the anaesthetic equipment. It will be appreciated that if such a device is to lie perfectly symmetrically in use then the airway tube will be aligned with the patient's nose. However, any rotational or sideways movement of the airway tube will have the potential to affect the seal that the airway device makes around the laryngeal inlet.

Several types of airway device have been described in the patent literature. For example, US5,976,072 (Johns Hopkins University) describes a fiberoptic endotracheal intubation device. However, this relies on an inflatable oro-pharyngeal cuff that suffers from the disadvantages referred to above.

US5,865,176 (O'Neil) and GB2,319,182 (VBM Medizintechnik GmbH) describe airway devices having a double inflatable cuff arrangement, a first inflatable cuff for providing a seal in the patient's pharynx and a second inflatable cuff for providing a seal in the patient's oesophagus. This arrangement compounds the problem of tissue damage as set out above.

In a contrasting arrangement, GB2,373,188 (Smiths Group plc) describes an inflatable laryngeal mask with a tear-shaped blocker plate designed to prevent the mask blocking the epiglottis during insertion. This only goes to emphasise the potential downsides of a tubular inflatable mask of this type.

Finally, in WO00/61213 (Brain) there is described a disposable laryngeal mask airway device with an inflatable cuff. However, not only does this suffer from all the disadvantages of an inflatable cuff device, but it is formed from multiple components, adding to the cost and complexity of manufacture.

Collectively, these represent the closest prior art known to the applicant.

It is an object of the present invention to overcome or mitigate some or all of these problems.

Summary of the Invention

A first aspect of the present invention provides an airway device as described in the accompanying claims.

Accordingly, according to a first embodiment, there is provided an airway device for human or animal use comprising an airway tube having a distal end and a proximal end, the distal end of which is surrounded by a laryngeal cuff, adapted to form an anatomical fit over the laryngeal inlet of a patient, characterised in that the device further comprises a buccal cavity stabiliser located on or around the airway tube between the laryngeal cuff and the proximal end of the tube, said buccal cavity stabiliser being adapted to nest with the anterior aspect of the patient's tongue, the size, shape, softness and configuration of the buccal stabiliser being adapted to provide stability and to prevent rotational or side-to-side movement of the airway tube in use. This buccal cavity stabiliser may be formed from the same material as the cuff or from a different material and assists in locating and maintaining the position of the device in use.

Airway devices according to the present invention will be referred to in the following text by the shorthand abbreviation NLA (Nasir Laryngeal Airway Device), named after the inventor.

Preferably the cuff is non-inflatable and is pre-formed in a shape adapted to form an anatomical fit over the laryngeal framework of a patient. The aryepiglotlic fold, arytenoid & corniculate cartilages, Interarytenoid fold and piriform fossae make the laryngeal structure anatomically an irregular structure. The terms laryngeal inlet, laryngeal framework and laryngeal structure are used interchangeably in the following description. These terms relate to the larynx area of a patient and the surrounding tissue, folds and cartilages as illustrated in Figure 1.

The device is a mirror image of the laryngopharyngeal framework thus providing an anatomical fit to the irregular structural framework of the laryngopharynx. Incorporation of an anatomically designed cup/cuff also offers advantages over the use of an inflatable cuff which will exert a significant extra luminal pressure not only well beyond the pressure (22- 26 mm/Hg) at which the soft tissue

surface is being supplied but will also distort, compress, dislocate, dislodge or fracture the structures in contact with the cuff. Extraluminal pressure is exerted onto the structure of laryngopharynx not only by the cuff's repeated inflation with air to create an adequate seal, which is achieved at the cost of distortion of the surrounding structures by undue pressure caused by a rounded, smooth-faced tensed cuff, and also increased in situ by absorption of nitrous oxide (anaesthetic gas) into the cuff's lumens. This can increase cuff pressure beyond 100mmHg immediately, rising beyond 200mmHg within an hour's use, which is well above the normal intracellular pressure or the pressure at which the blood capillaries supply the laryngopharyngeal structures.

Preferably the laryngeal cuff is pre-formed, pre-inflated with air or pre-filled with a suitable fluid.

Preferably the face of the laryngeal cuff adapted to form an anatomical fit over the laryngeal framework of a patient incorporates protuberances designed to form a good seal with the pyriform fossae and aryepiglottic folds of the laryngeal framework of the patient. It is also preferred that the face of the laryngeal cuff incorporates protuberances designed to form a good seal with the valleculae, epiglottis, aryepiglottic folds, pyriform fossae and around the anterior aspect of thyroid & cricoid cartilages. The seal around these features may also be reinforced or enhanced by one or more feather-like flanges located around part or all of the perimeter of the laryngeal cuff. This design enables increased seal pressure that will allow well in excess of 30cm H_2O to be obtained.

In a further preferred embodiment the face of the laryngeal cuff adapted to fit snugly over the Laryngeal inlet of a patient incorporates grooves designed to allow passage of vital arteries, veins and nerves supplying the laryngeal structure.

In a particularly preferred embodiment the distal tip of the laryngeal cup is so sized and shaped as to remain above the upper oesophageal sphincter in use. Most preferably the distal tip of the laryngeal cup is substantially concave in shape.

In an alternative embodiment the laryngeal cup portion is pre-formed from a material which is adapted to absorb a liquid such as water/mucous/blood or similar matter to swell to conform to the anatomical mucocartilagenous framework of laryngeal inlet e.g. material like CRM(cotton rayon mix)- used to manufacture TAMPAX (RTM) (tampon) or Compressed Gel Foam5.

Preferably the buccal cavity stabiliser has a first, ventral face in substantially the same plane as the plane of the open face of the laryngeal cuff and the first face of the buccal cavity stabiliser is substantially concave in shape. This assists the operator with inserting the device into the patient and with bringing the buccal cavity stabiliser into contact with the patient's tongue.

Preferably the buccal cavity stabiliser extends from the proximal end of the laryngeal cuff towards the proximal end of the airway tube such that the cuff and the buccal cavity stabiliser are of integral construction. This provides a smooth, elegant device with an appealing and practical design.

Preferably the buccal cavity stabiliser is non-uniform in its width W, having a wide point located at a point intermediate the laryngeal cuff and the proximal end of the airway tube, and more preferably the wide point of the buccal cavity stabiliser is closer to the laryngeal cuff than to the proximal end of the airway tube. This arrangement places the widest or broadest region of the stabiliser in contact with the base of the patient's tongue when in use.

Preferably the ratio of the width W of the buccal cavity stabiliser at its widest point to the height H of the buccal cavity stabiliser at that same point is 2.7 $\pm$ 10%.

Advantageously the face of the buccal cavity stabiliser which comes into contact with the patient's tongue may be roughened to increase friction of the stabiliser with the tongue in use.

In a further alternative embodiment the buccal cavity stabiliser is adjustable in size, for example wherein the buccal cavity stabiliser is formed from a unit, at least part of which is slidably mounted with respect to the airway tube.

In a particularly preferred embodiment the buccal cavity stabiliser is formed as an integral part of the airway tube, and further preferably the buccal cavity stabiliser, the airway tube and the laryngeal cuff are all formed as an integral unit.

The Shore hardness of the various, parts, portions or components is an important feature of the invention. For example, the laryngeal cuff is preferably formed from a material with a Shore hardness on the A scale of 40 or less and more preferably between 0 to 20, and most preferably between 4 to 12.

Preferably the laryngeal cuff and a front, ventral part of the buccal cavity stabiliser are formed from a material of substantially the same Shore hardness. This simplifies construction and ensures that all portions of the device that come into firm contact with the patient's soft tissue are relatively soft.

In a further preferred embodiment a back or dorsal part of the device and a front or ventral part of the device are formed from materials of different Shore hardness. This enables the dorsal portion to be made of a firmer material than the ventral portion.

Preferably the back or dorsal part of the device is formed from a material of Shore hardness less than 60 on the A scale, more preferably between 25 to 45, and most preferably between 30 to 40.

It should also be appreciated that the laryngeal cuff can be inflatable. Whilst this is not ideal, it still represents a significant improvement over and above prior art inflatable masks.

Preferably the device further incorporates a gastric tube passageway extending from the lip of the cuff to the proximal end of the device.

According to a second aspect of the present invention there is provided a method of manufacturing an airway device comprising the steps of:-

(a) forming mouldings of a first part of the device and a second part of the device;

(b) bonding the first part to the second part around a connector.

This represents a considerable simplification over the manufacture of prior art devices, which are typically multi-component in design.

Preferably the first part is a front, ventral part of the device incorporating the face of a laryngeal cuff and the second part is a back, dorsal part in which the first and second parts are formed from materials of the same or different Shore hardnesses.

According to a third aspect of the present invention there is provided a method of manufacturing an airway device comprising an airway tube, a laryngeal cuff and a buccal cavity stabiliser comprising forming the device as a one-piece plastics moulding, preferably wherein the device is formed by the technique of injection moulding.

Brief Description of the Drawings

The invention will now be described, by way of example only, with reference to the accompanying drawings in which:-

Figures 1A to C illustrate various views of the laryngeal cartilages and ligaments. This illustration is derived from Tortora G.J., Grabowski G, Reynolds S. Principles of Anatomy and Physiology.John Wiley, 10th Ed, 2003. Pg 781, the text and illustrations of which are herein imported by reference;

Figures 2 and 3 illustrate in plan view two embodiments of the present invention;

Figures 4 to 7 illustrate two further embodiments with exploded views showing each airway device in two halves with an airway tube sandwiched between the halves;

Figure 8 shows an optional feature of a second passageway or tunnel starting at the lateral aspect of proximal end of NLA and curving towards the distal end to give its NLA tube/distal opening a posterior aspect of the NLA tube through the mask to allow passage of an orogastric tube;

Figure 9 shows a longitudinal slit running substantially the length of the mask to accommodate an endotracheal tube used in anticipated or unexpectedly difficult intubations; with or without the use of a bougie, Cook's airway or fibre-optic scope.

Figures 10.1 to 10.6 show various plan, side and cross-sectional views of a further embodiment of the present invention.

Figures 11, 12 and 13 show two frontal and one side or lateral view of a further embodiment according to the present invention in which the buccal cavity stabiliser is adjustable in size;

Figures 14 shows diagrammatically an airway device according to the present invention engaged over a laryngeal inlet;
Figure 15 (cancelled);

Figure 16 illustrates a number of perspective, cross-section and exploded diagram views of an airway device, showing that the airway tube itself may stand proud of the main body of the device;

Figures 17A to F show front, back, side and end elevational views of a further, preferred embodiment of the present invention;

Figures 18A, B and C show front and side elevations of particularly preferred embodiments incorporating thin, flexible flanges around part of the circumference of the laryngeal cuff;

Figures 19, 20 and 21 show various diagrammatic cross-sectional and isometric views of devices according to the present invention in situ in a human patient;

Figure 22 illustrates a section along the line Y-Y shown in Figure 21.

Description of the Preferred Embodiments

Embodiments of the present invention are described below by way of example only. These examples represent the best ways of putting the invention into practice that are currently known to the applicant although they are not the only ways in which this could be achieved.

Referring to Figure 2, this illustrates the distal end of a mask device according to a first embodiment of the present invention, generally shown as 10. This comprises an airway tube 11, which at its proximal end 12 (not shown) terminates in a 15mm or other connector suitable for connection to an anaesthetic breathing system of conventional type. Formed around the distal end 13 of the airway tube is a laryngeal cuff or cup 14 adapted in its shape and contours to correspond with the larynx inlet region of a patient. In this context the terms cuff and cup have an equivalent meaning. They refer to the element of the device at the distal end of the airway tube that is adapted to cover and form a seal with the laryngeal inlet of the patient. In the context of this description, the term proximal means the end of the device, or portion thereof, closest to the connection to the anaesthetic breathing system. The term "distal" means the end of the device, or portion thereof, furthest from the anaesthetic breathing system.

Laryngeal cuffs, in general, are well known to the specialist and the anatomy of the laryngeal inlet region of a human are shown in some detail in Figures 1A, B and C. The particular cuff shown in Figure 2 incorporates in the cuff face pronounced and discernable bulges or protruberances 15, 16 designed to form a good seal with the piriform fossae and aryepiglottic folds. It will be appreciated that the outbulgings in the cuff at 15 and 16 are positioned antero-laterally to give an anatomical seal by fitting into the piriform fossae and aryetriglottic folds. Thus, in side elevation, the face of the cuff is not a flat planar surface but includes regions that protrude above the general plane of the cuff face. Additionally, there may optionally be regions which lie below the general plane of the cuff face. These shapings and the general size, shape and configuration of the surface of the cuff face around opening 17 are an important feature of the invention. Alternative shapes for the face of the cuff are shown in Figures 3, 5, 10, 11, 12, 17 and 18 and are described in more detail below.

The device may be constructed from any suitable plastics material as selected by the materials specialist. Latex-free medical grade silicone rubber is one preferred material. The cuff should be soft in texture to avoid undue damage to the surrounding tissue. Other suitable materials for construction of this type of device include, but are not limited to, Poly Vinyl Chloride (PVC), Thermoplastic Elastomers such as the styrenic block copolymers (eg Styrene Butadiene Styrene (SBS), Styrene Ethylene Butylene Styrene (SEBS)), and Thermoplastic Olefin Blends (TPO), Thermoplastic PolyUrethanes (TPU), Copolyester (COPE), Polyether Block Amides (PEBAX) and foamed versions thereof, where appropriate.

A further important factor involved in the choice of a suitable material is transparency. Ideally the material or materials of construction should be substantially clear or transparent. This enables the anaesthetist or operator to see the inner lumen of the airway to check for blockages or other problems. Such transparent materials are known to the materials specialist.

In one preferred embodiment the cuff is non-inflatable and is formed from any suitable soft plastics material. By way of a preferred softness (hardness) range, on the Shore A scale of Hardness, a hardness of less than 40 for the face of the cuff that contacts the laryngeal inlet is optimum. By way of a preferred range, a value on the same scale of between 0 to 20 is preferred, with a particularly preferred range of 4 to 12. The softness of the cuff can be further adapted by forming cavities or channels within the body of the cuff itself (shown in Figure 4 and 5).

In a further preferred embodiment the cuff may be pre-filled with a fluid such as air, or other non-toxic gas, or a non-toxic liquid. In this context the term fluid has a broad meaning and includes any suitable gas, liquid, vapour or combination thereof and will be determined and designed by an expert in this field of anatomy/anaesthesia in conjunction with the materials specialist. The cuff will be constructed of such a material which will not allow nitrous oxide (anaesthetic gas) to diffuse through the material to any significant amount so that the extra luminal pressure is kept constant. It follows therefore that the cuff should be substantially impermeable to the fluid with which is filled and to anaesthetic gases.

Alternatively, the cuff can be formed from a soft, foamed material or can be foam filled. In either case this provides a soft deformable but shaped surface around the face of the cuff to engage over the anatomy of the larynx inlet region. Such a foam filled device will minimise any potential damage to the structures in that region whilst still providing a substantially complete seal.

Directly adjacent to the laryngeal cuff/cup but positioned on the proximal side of the airway tube to the cuff itself is a buccal cavity stabiliser 20. In this example this stabiliser takes the form of an expanded region extending symmetrically on either side of the airway tube. This stabiliser is adapted to rest on the anterior aspect or front of the tongue and is configured to correspond with the anatomy of that part of the patient.

A wide variety of shapes, sizes, and positions for this stabiliser are possible. The one illustrated in Figure 2 is curved in the plane of the cuff face such that the face visible in Figure 2 is slightly concave, with the rear face being slightly convex. The face of the stabiliser may be roughened, scored or serrated to increase the friction with the tongue and thus stabilise it in use, to avoid or reduce forward or backwards movements when in use.

In this example the stabiliser is formed integrally with the cuff, such that one runs smoothly into the other. However, this is not essential and the stabiliser could be a separate unit on the airway tube. An essential feature of the stabiliser is that it is broader in cross-section than the diameter of the airway tube itself. That is to say it extends into a region either side of the airway tube and in the same generally plane as the laryngeal cuff. Preferred dimensions for the buccal cavity stabiliser will be discussed below.

A further example of a different design of buccal cavity stabiliser is illustrated in Figure 11, 12 and 13. In this example the stabiliser 50 is adjustable and has two side hooks 51, 52 at the lateral aspects, near the proximal end of the airway tube, which can be slid downwards and upwards to increase or decrease the size of the flanges for adequate stability, and for the ease of insertion and removal of the NLA. The hooks engage into ratchet strips 53, 54, formed in opposing sides of the airway tube. The stabiliser is formed from a resiliently deformable, flexible

material such that as the hooks are forced from their position as shown in Figure 11 to a position closer to the cuff at the distal end of the tube, as illustrated in Figure 12, the spread of the stabiliser on either side of the airway tube increases the more the hooks are moved towards the cuff, and therefore the broader the stabiliser. Thus the stabiliser extends from the proximal end of the airway tube, just below the connector to the proximal end of laryngeal cuff. The stabiliser is substantially symmetrical in shape and can be slid down to give an expanded shape across the buccal cavity. Figure 13 shows an oblique lateral view of this embodiment.

This is just one of the many methods which could be used to form a stabiliser. A stabiliser could be formed from any, preferably soft, extension around the airway tube wall that can lie on the anterior aspect of the tongue. Any suitably shaped laterally extending flange whose body lies mainly along the longitudinal axis of the airway tube would serve this purpose. The flange need not be solid, so a tubular, mesh or other perforated structure would be perfectly acceptable. The stabiliser preferably has a concave face or region when viewed from the direction shown in Figure 11, ie from a direction normal to the face of the cuff, that conforms substantially to the anterior region of the tongue of the patient.

It is also possible to form such a "flange" by broadening the profile of the airway tube at the appropriate region, just above the cuff. That is to say, the buccal cavity stabiliser may be an integral part of the airway tube, rather than being a separate component formed on or around the airway tube itself. Thus, a suitable increase in the general profile of the airway tube, whether formed by the tube itself or by forming additional material around the tube, can act as a stabiliser.

The general profile of the buccal cavity stabiliser and the way that it merges smoothly into the cuff region can be seen in more detail from Figures 16 and 17A and B, which will be described in more detail below. However, it will be appreciated that both weight and plastics material would be saved if the internal diameter or profile of the airway tube increased and decreased correspondingly with the width of the buccal cavity stabiliser. The term "internal profile" is used because, as the airway tube broadens it becomes non-circular and instead assumes a substantially elliptical shape. It will therefore be appreciated that in this embodiment the cross-sectional area of the airway tube increases as the

width of the buccal cavity stabiliser increase to its widest point and then decreases again. By maximising the width of the airway tube this has the potential to increase laminar flow within the device.

A further feature of the airway device shown in Figure 11 are the two sets of protrusions or bulges 56, 57 and 58, 59 on the face of the cuff. The larger of the two sets 56, 57 are adapted to around the aryepiglottic folds and in the pyriform fossae. The smaller of the two 58, 59 are adapted to fit around the Thyroid and Cricoid cartilages. In addition, the tip of the cuff 55 is a soft, tapered lip but is preferably not inflated.

A further example is illustrated in Figure 3. This illustrates an airway device 30 having a cuff 34 and a buccal cavity stabiliser 40. In this case there are two outbulgings or protrusions on either side of the cuff 35, 36, 38 and 39. An upper set, 38, 39 consisting of one protrusion on each side, is designed to lie around the aryepiglottic folds and in the pyriform fossae. The lower set 35, 36 are designed to lie around the thyroid and cricoid cartilages. The relative sizes of these bulges will be determined by the appropriate specialist. It is probable that the bulges 38 and 39, designed to fit around the aryepiglottic folds and in the pyriform fossae will be slightly larger than the two lower bulges. The distal/lower end of the cuff is soft but firm, and preferably not pre-inflated or pre-filled for the ease of the device's insertion, and adapted to lie in between the larynx and oesophagus. Further variations are shown in Figures 4 to 7, which show the flexibility possible within this general design concept. Figures 6 and 7 illustrate the possibility of including an additional moulding 60 on the proximal end of the unit.

Figure 5 illustrates one possible method of manufacture of a device according to the present invention. The device is manufactured from appropriate material as described previously in two halves 81 and 82. The two halves are bonded together around an airway tube 83 (not shown for clarity). The airway tube fits into a specially designed channel 84. In this example the buccal cavity stabiliser 90 is moulded integrally with the cuff 94. The tip of the device contains a series or plurality of cavities 91, 92 and 93. In this context plurality means one or more. These cavities increase the flexibility of the tip, which aids the insertion, and positioning of the device in use. These cavities also affect the softness and

pliability of the tip, their presence making the tip softer than if it was formed from solid plastics material. Generally, the softer the material, the less potential there is to damage the tissue of the patient. The generally concave nature of the device is also apparent from Figures 4 and 5.

A further feature in these embodiments which is apparent from these figures is that the distal tip of the device tapers to a gentle point. This tapered end is intended to lie or wedge between the larynx and the oesophageal inlet.

An understanding of one method of constructing an airway device according to the present invention can be appreciated from Figures 4 to 7 inclusive. Basically, the device in Figure 7 is formed in two parts 61 and 62 plus a moulding 64 which includes a 15mm or other connector to connect the device to an anaesthetic breathing system. 61 is a ventral or front moulding, being that portion which comes into contact with the patient's laryngeal inlet and tongue. 62 is a dorsal or back moulding, being that side which faces away from the ventral portion. These definitions of ventral and dorsal are used throughout this specification.

Optionally the device may also include a separate airway tube 63 that nests within channels 66, 67 formed within the internal body of mouldings 62 and 61 respectively. However, in a particularly preferred embodiment this separate tube 63 is omitted. In this example the tube 63 and mouldings 62 and 61 are made of silicone rubber and the mouldings 64 and 68 from polypropylene. The larger of the two polypropylene mouldings 68 is designed to prevent the device passing into the patient's mouth beyond a certain point.

The airway tube may be of any appropriate diameter, or cross-section if the tube is not circular. Typically a 9mm tube would be used in an adult version of the airway device.

The mouldings 61 and 62 are bonded, glued, welded (including but not limited to heat welding and laser welding) or otherwise fixed together during assembly. It follows from this simple, elegant and cost-effective form of manufacture that the two components 61 and 62 can be formed from materials with different hardnesses. Thus the front portion of 61 that contains the laryngeal cuff can be

made out of a softer material than the back portion. Typical Shore hardnesses on the A scale for the front portion 61 are between 0 to 20, more preferably 0 to 15 and more preferably 4 to 12.

The rear portion 62 has typical Shore hardness values of 20 to 60 and more preferably 30 to 40.

It is possible to incorporate an additional passageway 70 or passageways within the body of the unit and alongside the airway tube. An example of this is illustrated in Figure 8. This passageway allows other tube(s) or wire(s) to be passed down the oesophagus during use without the need to move or disturb the device. For example, orogastric intubation now becomes possible.

In another variant, shown in Figure 9, the airway incorporates a longitudinal slit extending substantially the whole length of the passageway. This allows other tubes or wires (bougies, stylets etc) to be inserted or withdrawn during use without the need to disturb the mask, during planned or unexpected difficult intubations. Furthermore, this slit arrangement means that the airway device can be released from the tube or wire and removed from the patient leaving the tube or wire in place undisturbed.

Figure 10 shows a further embodiment of the present invention and also shows the generally curvilinear shape of the device along its longitudinal axis. This shape is designed to correspond with the mouth/throat opening in an anaesthetised patient. The longitudinal axis is the axis line shown as the straight dotted line in Figure 10.4 and runs from the proximal and of the airway tube to the distal tip of the cuff.

The general shape of one preferred embodiment of the buccal cavity stabiliser is shown in Figure 10.3. The stabiliser, generally shown as 100, is formed around an airway tube 101. However, as described above, a separate tube is not necessary and a tubular passageway can be formed from channel(s) formed into the body of the stabiliser. The stabiliser portion extends 102, 103 on both sides of the tube 101 in a generally elliptical cross-section. It will be appreciated from Figure 10.1 and 10.5 and Figures 17 and 18 that the width of the buccal cavity stabiliser is non-uniform and varies along its length. This is in contrast to the

airway tubes of similar prior art devices, which are generally uniform in cross-section. The width in this context is the edge-to-edge dimension in a direction normal to the longitudinal axis of the device and in a plane substantially parallel to the plane of the open face of the cuff. The stabiliser is narrowest at the proximal end of the device, then increases in width to a widest point, and then decreases in width again until it merges into the proximal side of the laryngeal cuff. The widest point of the stabiliser is therefore between the proximal end of the airway tube and the proximal end of the laryngeal mask. Generally it is advantageous if the widest part is nearer to the laryngeal mask end than it is to the proximal end, as shown in Figures 17A and B. This locates the widest part nearest to the anterior region of the patient's tongue in use.

Importantly the height H of the stabiliser does not vary in a similar way. Rather the height remains substantially the same along the longitudinal axis of the stabiliser. This is quite different from conventional airway tubes.

It will be evident from the foregoing that the width of the ellipse W at its widest point is greater than the height H at the same point. By way of example, for an adult airway device according to the present invention the width W of the stabiliser, at its widest point, would be in the range 3.5cm to 4.5 cm and the height H would be in the range 1.25cm to 1.75cm. A preferred ratio of W:H is 2.7 $\pm$ 10%.

An important feature of the shape of this stabiliser is the profile of the upper 104 and lower 105 outer surfaces. These are both convex and gently curved in their broadest regions. This not only makes for ease of use but, more importantly, the lower surface 105 which comes into contact with the tongue in use, is profiled to follow the shape of the back of the patient's tongue and is soft enough to deform to conform to it.

A further embodiment is illustrated in Figure 16. In this embodiment the airway tubing 111 is only partly contained within the body of the airway device 110. The distal end of the tube passes into and completely through the body of the device to form an opening within the cuff 113. In this embodiment a different profile of stabiliser is illustrated. In this case the lower surface 115, which contacts the

tongue in use, is gently concave in shape, with the upper surface being generally convex.

Once bonded together, the device becomes what is, in effect, a unitary construction. That is to say, the components become as one. This simplifies sterilization, if the devise is reusable, and increases reliability.

However, unitary construction is not essential. For example, it may be possible to form the buccal cavity stabiliser as a separate component (not shown) that is threaded over, around or on to the airway tube if required. This design would give the anaesthetist the option of using the device with or without a stabiliser as desired. It would be necessary to incorporate some form of securing means to secure the stabiliser to either the cuff or the tube. Means of fixing or securing plastic components are well know, such as snap-fit connectors.

This option increases the design options for the stabiliser. A form of leaf spring, secured at one or both ends to the airway tube could be employed. Alternatively an inflatable structure could be used. It will be recalled that inflatable cuffs have been used in this context. However, this type of technology has never been used before to incorporate a buccal cavity stabiliser into a device of this type.

Two further embodiments are illustrated in Figures 17 and 18. These illustrate the streamlined, unitary construction of these embodiments of the invention, with the cuff region 121 merging smoothly into the buccal cavity stabiliser region 122. There are certain other key features shown in these Figures. For example, where the airway tube enters the laryngeal cuff, it does so through three separate apertures 123, 124 and 125. This greatly decreases the chance of the airway tube being blocked. The shape of the distal end of the stabiliser joining the proximal end of the cuff/cup is designed in such a way that when the device is in situ, it fits anatomically correctly in and around the valecullae.

The distal tip of the cuff 126 has been truncated and in fact is now concave in shape. This results in less compressive pressures being exerted over the thyroid and cricoid cartilages, blood vessels and nerves supplying the laryngeal framework than is the case with prior art devices. This so-called concave tip can take a variety of different shapes and forms. The tip may be "squared off" such

that the end of the tip is substantially planar. Or there may be a pronounced indentation in the tip, as shown in Figure 17A. At the base of that indentation is an aperture forming the end of a gastric tube passageway described below. In summary, this truncation is intended to encompass any tip which results in less compressive pressure being exerted than by prior art devices.

A second, gastric tube passageway, separate to the airway tube is provided which runs from an opening 127 in the proximal end of the device near the connector 128 to an opening in the distal tip of the cuff 129, more clearly shown in Figure 17E. The gastric tube allows for any gastric aspirate to be detected in the event of passive regurgitation during use. It also provides a route for the insertion of small-bore gastric tubes (eg Freka Tubes).

A further novel feature of this device is the lip or flange 130 located at the proximal end of the cuff region. This lip is sized and shaped so as to be anatomically positioned against the epiglottis, to ensure a proper seal and to hold the epiglottis back from folding towards the laryngeal inlet avoiding obstruction to airflow. This tip takes the form of a leaf like structure extending out of the laryngeal cuff and directed back towards the proximal end of the airway tube. Its relative size and shape can be seen from Figure 17. The optimum size and shape will be determined by experimentation. The applicant is not aware of any prior art masks which contain this feature.

Figure 18 also illustrates certain novel features of construction and of the laryngeal cuff. Turning first to the cuff, in this embodiment thin, flexible featherlike flanges 140 and 141 have been introduced on opposing sides of the cuff. These are preferably formed as an integral part of the moulding of the cuff and, because of the very soft nature of the material used to form the cuff, these flanges are particularly soft and pliable. Their purpose is to make allowance for any individual patient variation in the laryngeal inlet shape and to contribute to forming an efficient and effective seal between the cuff and the laryngeal structures. By this design, and by designing the cuff to be a close anatomical fit, the obtainable seal pressure from experimental trials is well in excess of 30cm H_2O.

The feather-like flanges 140 and 141 are shown in Figure 18 as discontinuous structures but these can in fact be connected to each other towards the distal end of the cuff (Figures 18C and D). In this arrangement flanges 140 and 141 become a single U-shaped flange extending around the majority of the laryngeal cuff perimeter.

Also shown in Figure 18 is a two-part form of construction. The two parts are an upper, curved portion 145, whose outer surface is generally convex and a lower curved portion 146 whose outer surface is generally concave and which includes the face of the laryngeal cuff which contacts the patient's laryngeal inlet in use. Formed within these two portions is an airway tube channel that extends from the proximal end 147 to the distal or cuff end 149, and the second passageway described above.

The upper and lower parts are then bonded together around connector 150 by use of a suitable adhesive or welding technique as selected by the materials specialist.

The upper portion 145 and the lower portion can advantageously be formed from materials having different Shore hardnesses. Thus, the upper portion can be formed of a material having a Shore hardness on the A scale in the range of 30 to 40, whereas the lower portion can be formed from a softer material with a hardness in the range 4 to 12 on the same scale.

If required, the cuff region can be formed from a different material and of a different hardness, from other parts of the device. This arrangement is shown in Figure 17C where the device is formed in three parts 135, 136 and 137 rather than two.

However, the elegant and simple design of this airway device does allow for an even simpler method of manufacture. It has been discovered that the device can be moulded as a one-piece unitary construction in one mould. By constructing the mould appropriately, and by careful consideration of how the mould parts separate, one-piece manufacture is possible. The moulding may be produced using a process commonly known as 2 shot injection moulding, in which the materials are injected separately to form the relevant parts of the component. Alternatively, the

component could be formed from material of the same hardness throughout using a single injection process, and if desirable overlain, in all or part of the ventral or dorsal section, with a material of differing Shore hardness. The technology for forming such overlay or laminates is known to those skilled in art.

Turning now to the design of the laryngeal cuff, in the foregoing examples the cuff region has been pre-formed from a soft material, or pre-filled during manufacture with a fluid. In the latter case the lining of the cuff should be made from a material that does not absorb anaesthetic gases such as Nitrous Oxide, such that the pressure inside the cuff does not rise during use.

In any alternative embodiment the cuff may be formed from a material which is adapted to absorb a liquid, such as water, mucous or blood or similar liquid material and in doing so to swell in size so as to confirm to the anatomical mucocartilagenous framework of the patient's laryngeal inlet. Such materials will be selected by the materials specialist but include CRM (cotton rayon mixes) as used in TAMPAX (RTM) tampons, or compressed Gel Foam 5.

In a further, alternative embodiment, the cuff could take the form of a conventional, inflatable cuff. Whilst this is not ideal, because of the inherent disadvantages of inflatable cuffs, the incorporation of a buccal cavity stabiliser of the type described above, made from soft materials as described above, into an inflatable laryngeal mask airway device represents a significant improvement over and above prior art inflatable masks. The technology to form an inflatable cuff is well known and need not be described here.

In summary, the aims and objectives of the present invention are to provide an anatomically oriented, versatile, reliable, simple and cost effective device intended to be used in spontaneously breathing anaesthetized patients or patients recovering from anaesthetic, in certain group of intensive care patients during their weaning process and during resuscitation, to provide a secure, clear and hands-free airway for the delivery of oxygen and/or anaesthetic gases.

Main aims and objectives are as follows:-

- To provide a simplified design which has all the advantages of existing airway devices and has an anatomically oriented working mechanics in order to establish a clear airway in spontaneously breathing anaesthetized patients, patients in post-anaesthetic recovery phase or certain group of intensive care patients undergoing weaning off their ventilatory support.
- Avoids almost all the disadvantages and complications of currently used airway devices in anaesthetic practice.
- No need of laryngoscopy, intubation, or extubation and minimally invasive to pharyngo-larynx.
- User friendly, would require minimal training for anaesthetists, other doctors, nurses, paramedics and rest of the health care staff likely to use the device.
- A useful tool in the management of an unexpected or/and anticipated difficult endotracheal intubation. Useful either with an endotracheal tube through the airway or with planned Fibre-optic intubation or bronchoscopy.
- Self-retaining with hardly any need to tape or tie.

In summary the device has a Connector, expanded glosso-pharyngeal flanges and a pre-formed, pre-inflated or pre-filled anatomically designed laryngeal cup or cuff suited to the exact contour and shape of the laryngeal inlet. However, this should not be seen to prevent this invention being used with a conventional, inflatable cuff.

- CONNECTOR:-

15mm ISO standard connector suitable to be connected with any of the gas delivery systems used in anaesthetic, during post-anaesthetic recovery, in intensive care and resuscitation practice.

- EXPANDED GLOSSO-PHARYNGEAL/BUCCAL FLANGES:-

All the existing airways intubation devices have a varying degree of propensity to lateralize towards right or left angle of the mouth, rotation through 180 degrees about it's longitudinal axis and the movements of the airway inwards or outwards, which can lead to the displacement or misplacement of the distal end of the airway thus becoming ineffective for the purpose of it's use. A combination of the expanded flanges of the device, and constructing the device from a material of a Shore hardness less than 60 on the A scale, enables the buccal cavity stabiliser to act as an anchor for the airway device in the midline position by stretching over the anterior surface of the tongue across the buccal cavity and supported laterally by inner surface are aimed for better anchorage of the airway over the tongue. Thus, not only stabilizing the airway device positioned centrally but also stopping it to lateralize and/or rotate. Distally the expanded flange is incorporated into the flattened and angular part of the laryngeal cup with the postero-inferior surface of the tubular part of the device distally, in order to provide additional anchorage into the narrow hypopharynx.

- ANATOMICALLY ORIENTED LARYNGEAL CUP:-

A soft rubber or pre-formed, pre-inflated/pre-filled with a suitable liquid or soft material cup aimed not to exert an extra-luminal pressure of more than 22mmHg onto the mucosa of Laryngeal inlet and adjacent structures thus avoiding any compression or shearing forces onto the pharyngo-laryngeal mucosa ensuring a continued, uninterrupted blood flow through the capillaries of the surrounding tissues, thus ensuring an uninterrupted blood supply of the structures in contact with it. Anatomically oriented laryngeal cup sealingly surrounds the laryngeal inlet without distorting the structures with which it is in contact.

Laterally the out-bulgings of the cup or cuff are designed to fit around the pits of the Aryepiglottic folds and infero-laterally piriform fossae. The tapered lower end is for the ease of its passage through the oro-pharynx which will provide a seal over and beyond the interarytenoid fold in the midline and cuneiform and corniculate cartilages laterally. An upper midline slit will help the cup's passage over the epiglottis without damaging or folding and twisting the epiglottis into the

cavity or distal opening of the device into the cup. Above the slit, is the flatter part of the soft cup which is designed for the optimal placement in the hypo-pharynx in between the epiglottis and the base of the tongue thus separating the surrounding structures away from the glottis. Although the cup provides a near natural and anatomical seal over the glottic opening but still prevention from the aspiration of regurgitated gastric contents cannot be guaranteed. Such risk could be minimized by using a modified device with an oesophageal component in high risk patients.

SIZES:-

Sizes from 0-7 are envisaged.

1 to 2	for neonates and infants	(weight 3 -20kgs)
3	for children	(weight 21- 50kgs)
4 to 5	for adolescents	(weight 51- 90kgs)
6 to 7	for adults	(weight more than 90kgs)

Re-usable or disposable devices may preferably be made of materials as described above such as latex-free SEBS or medically graded silicone rubber. A re-usable (sterilizable) device would be capable of at least 40 uses. The simplicity of the design also offers increased ease of sterilization for the purpose of its reuse. Disposable devices would be a preferred choice of production which will be not only more economical but also devoid of any risk of cross infection as may be the case in re-usable devices.

As a result of the above design features a device according to the present invention, is likely to cost much less than any comparable device.

- NLA with OSEOPHAGEAL COMPONENT

Addition of an oesophageal component is intended to be used in patients with a suspicion of gastric statis under anaesthetics, in Intensive Care Units and for the patients with highly irritable airways who pose a well recognized and wide spread problem of weaning from ventilatory support. Such patients almost certainly end up with Tracheostomy in order to bypass their upper irritable airway, to facilitate weaning. Patients with

chronic obstructive/restrictive airway disease, asthmatics and heavy smokers are the ones who are more likely to pose the weaning problem.

- INTUBATING NLA

Morbidity or mortality in patients with an anticipated or/and unexpected difficult intubation is a well-recognized aspect of anaesthetic practice and a challenging nightmare for any anaesthetist when faced with that situation. A modified version of the NLA with a preformed longitudinal slit to the anterior of NLA will help facilitate intubation through the NLA with an endotracheal tube with the help of bougie, Cook's airway or a fibre-optic scope.

- OTHERS

Some modifications to the shape, design and working mechanics of each of the Component of the NLA are envisaged, whether needed for NLA's improved Performance or aesthetic look.

- The whole of the airway device could be manufactured as a single unit or each component of it manufactured separately if it is deemed necessary for the sake of its improved function or cost effectiveness or due to any other issue of practicality.

Key to Figure 1

1a	Epiglottis
1b	Hyoid Bone
1c	Thyrohyroid membrane
1d	Corniculate cartilage
1e	Thyroid cartilage (Adams apple)
1f	Aryteniod cartilage
1g	Cricothyroid ligament
1h	Cricoid cartilage
1i	Cricotracheal ligament
1k	Thyroid gland
1m	Parathyroid glands (4)
1n	Trachea
1o	Tracheal Cartilage
1p	Epiglottis
1q	Hyoid Bone
1r	Thyrohyoid membrane
1s	Thyrohyoid membrane
1t	Cuneiform cartilage
1u	Fat Body
1w	Corniculate cartilage
1x	Ventricular Fold (false vocal chord)
1y	Arytenoid Cartilage
1z	Thyroid Cartilage
2a	Vocal Fold (true vocal chord)
2b	Cricoid Cartilage
2c	Cricothyroid ligament
2d	Tracheal Cartilage
2e	Cricotracheal ligament

CLAIMS

1. An airway device for human or animal use comprising an airway tube having a distal end and a proximal end, the distal end of which is surrounded by a laryngeal cuff, adapted to form an anatomical fit over the laryngeal inlet of a patient, characterised in that the device further comprises a buccal cavity stabiliser located on or around the airway tube between the laryngeal cuff and the proximal end of the tube, said buccal cavity stabiliser being adapted to nest with the anterior aspect of the patient's tongue, the size, shape, softness and configuration of the buccal stabiliser being adapted to provide stability and to prevent rotational or side-to-side movement of the airway tube in use.

2. An airway device according to Claim 1 wherein the cuff is non-inflatable and is pre-formed in a shape adapted to form an anatomical fit over the laryngeal inlet of a patient.

3. An airway device as claimed in any preceding Claim in which the laryngeal cuff is pre-inflated with air or pre-filled with a suitable fluid.

4. An airway device according to any preceding Claim wherein the face of the laryngeal cuff adapted to form an anatomical fit over the laryngeal inlet of a patient incorporates protruberences designed to form a good seal with the piriform fossae and aryepiglottic folds of the laryngeal inlet of the patient.

5. An airway device according to Claim 4 wherein the face of the laryngeal cuff adapted to form an anatomical fit over the laryngeal inlet of a patient incorporates protuberances designed to form a good seal with the valleculae, epiglottis, aryepiglottic folds, pyriform fossae and around the anterior aspect of thyroid & cricoid cartilages.

6. An airway device according to any preceding claims wherein the face of the laryngeal cuff adapted to fit anatomically over the Laryngeal framework of a patient incorporates grooves designed to allow passage of vital arteries, veins and nerves supplying the laryngeal framework

7. An airway device according to any preceding claim wherein the distal tip of the laryngeal cup is so sized and shaped as to remain above the upper oesophageal sphincter in use.

8. An airway device according to Claim 7 wherein the distal tip of the laryngeal cup is substantially concave in shape.

9. An airway device as claimed in any of Claims 1 to 3 inclusive wherein the laryngeal cup is pre-formed from a material which is adapted to absorb a liquid such as water/mucous/blood or similar matter to swell to conform to the anatomical mucocartilagenous framework of laryngeal inlet e.g. material like CRM(cotton rayon mix)- used to manufacture TAMPAX (RTM) (tampon) or Compressed Gel Foam5.

10. An airway device according to any preceding claim wherein the buccal cavity stabiliser has a first, ventral face in substantially the same plane as the plane of the open face of the laryngeal cuff and the first face of the buccal cavity stabiliser is substantially concave in shape.

11. An airway device according to any preceding claim wherein the buccal cavity stabiliser extends from the proximal end of the laryngeal cuff towards the proximal end of the airway tube such that the cuff and the buccal cavity stabiliser are of integral construction.

12. An airway device according to any preceding claim wherein the buccal cavity stabiliser is non-uniform in its width W, having a wide point located at a point intermediate the laryngeal cuff and the proximal end of the airway tube.

13. An airway device as claimed in Claim 12 wherein the wide point of the buccal cavity stabiliser is closer to the laryngeal cuff than to the proximal end of the airway tube.

14. An airway device as claimed in any preceding claim wherein the ratio of the width W of the buccal cavity stabiliser at its widest point to the height H of the buccal cavity stabiliser at that same point is 2.7 $\pm$ 10%.

15. An airway device as claimed in any preceding claim wherein the face of the buccal cavity stabiliser which comes into contact with the patient's tongue is roughened to increase friction of the stabiliser with the tongue in use.

16. An airway device according to any preceding claim wherein the buccal cavity stabiliser is adjustable in size.

17. An airway device according to any preceding claim wherein the buccal cavity stabiliser is formed from a unit, at least part of which is slidably mounted with respect to the airway tube.

18. An airway device as claimed in any preceding claim wherein the buccal cavity stabiliser is formed as an integral part of the airway tube.

19. An airway device according to any preceding claim wherein the buccal cavity stabiliser, the airway tube and the laryngeal cuff are formed as an integral unit.

20. An airway device according to any preceding claim wherein the laryngeal cuff is formed from a material with a Shore hardness on the A scale of 40 or less.

21. An airway device according to Claim 20 wherein the laryngeal cuff is formed from a material with a Shore hardness on the A scale of between 0 to 20.

22. An airway device according to Claim 21 wherein the laryngeal cuff is formed from a material with a Shore hardness on the A scale of between 4 to 12.

23. An airway device according to any preceding claim wherein the laryngeal cuff and a front, ventral part of the buccal cavity stabiliser are formed from a material of substantially the same Shore hardness.

24. An airway device according to any preceding claim wherein a back or dorsal part of the device and a front or ventral part of the device are formed from materials of different Shore hardness.

25. An airway device according to Claim 24 wherein the back or dorsal part of the device is formed from a material of Shore hardness less than 60 on the A scale.

26. An airway device according to Claim 25 wherein the back/dorsal part of the device is formed from a material with a Shore hardness on the A scale of between 25 to 45, and preferably between 30 to 40.

27. An airway device according to any of Claims 1 and 4 to 26 inclusive wherein the laryngeal cuff is inflatable.

28. An airway device according to any preceding claim wherein the device further incorporates a gastric tube passageway extending from the lip of the cuff to the proximal end of the device.

29. An airway device substantially as herein described with reference to and as illustrated in any of the Figures 2 to 18 inclusive.

30. A method of manufacturing an airway device comprising the steps of:-

(a) forming mouldings of a first part of the device and a second part of the device;

(b) bonding the first part to the second part around a connector.

31. A method according to Claim 30 wherein the first part is a front, ventral part of the device incorporating the face of a laryngeal cuff and the second part is a back, dorsal part.

32. A method according to Claim 30 or Claim 31 wherein the first and second parts are formed from materials of different Shore hardnesses.

33. A method of manufacturing an airway device comprising an airway tube, a laryngeal cuff and a buccal cavity stabiliser comprising forming the device as a one-piece plastics moulding.

34. A method of manufacturing an airway device as claimed in Claim 33 wherein the device is formed by the technique of injection moulding.

35. A method of manufacture according to any of claims 30 to 34 inclusive as applied to the manufacture of a device according to any of claims 1 to 29 inclusive.

36. A method of manufacture substantially as herein described.

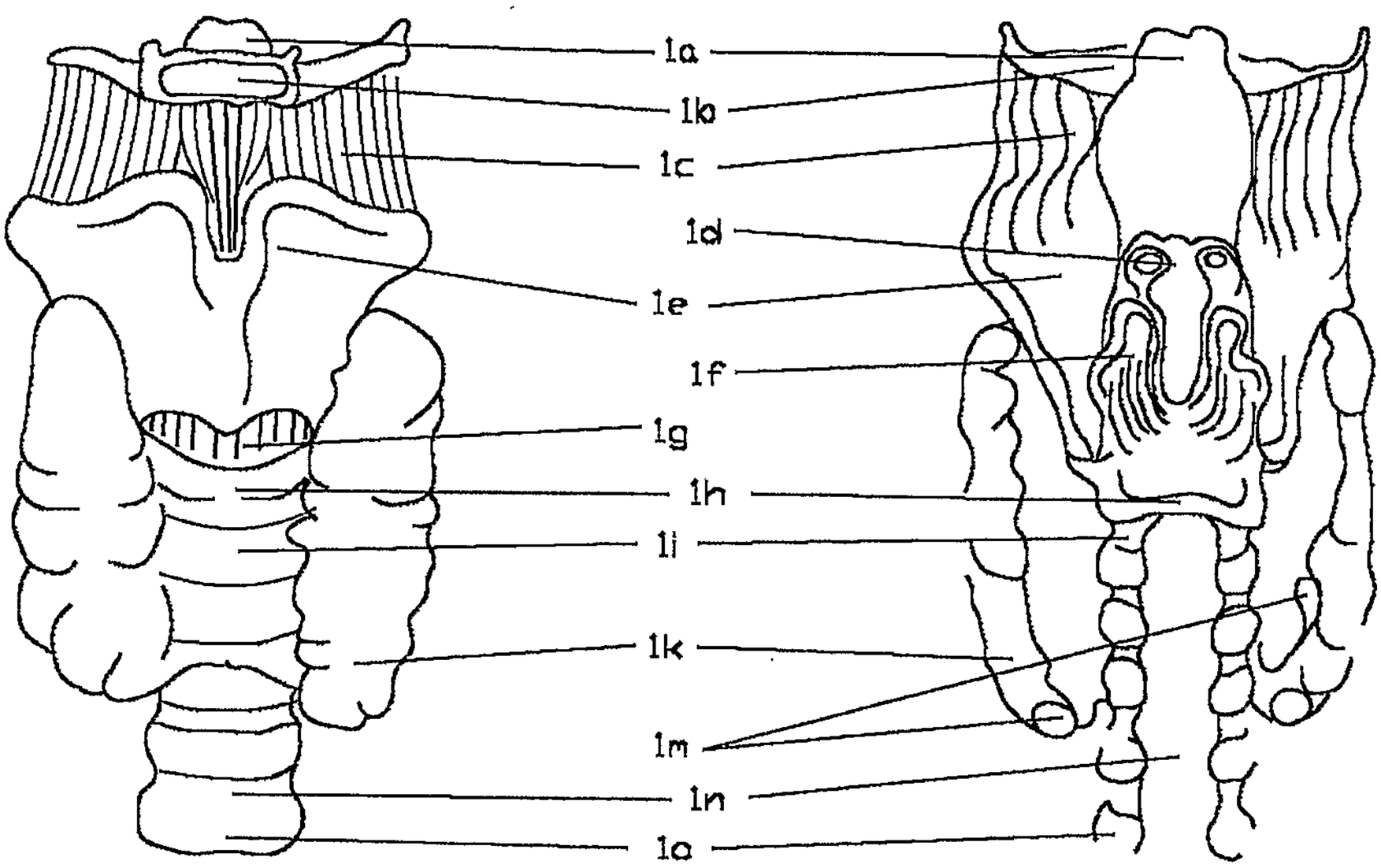

(a) Anterior View (b) Posterior View

Fig 1 a, b, c

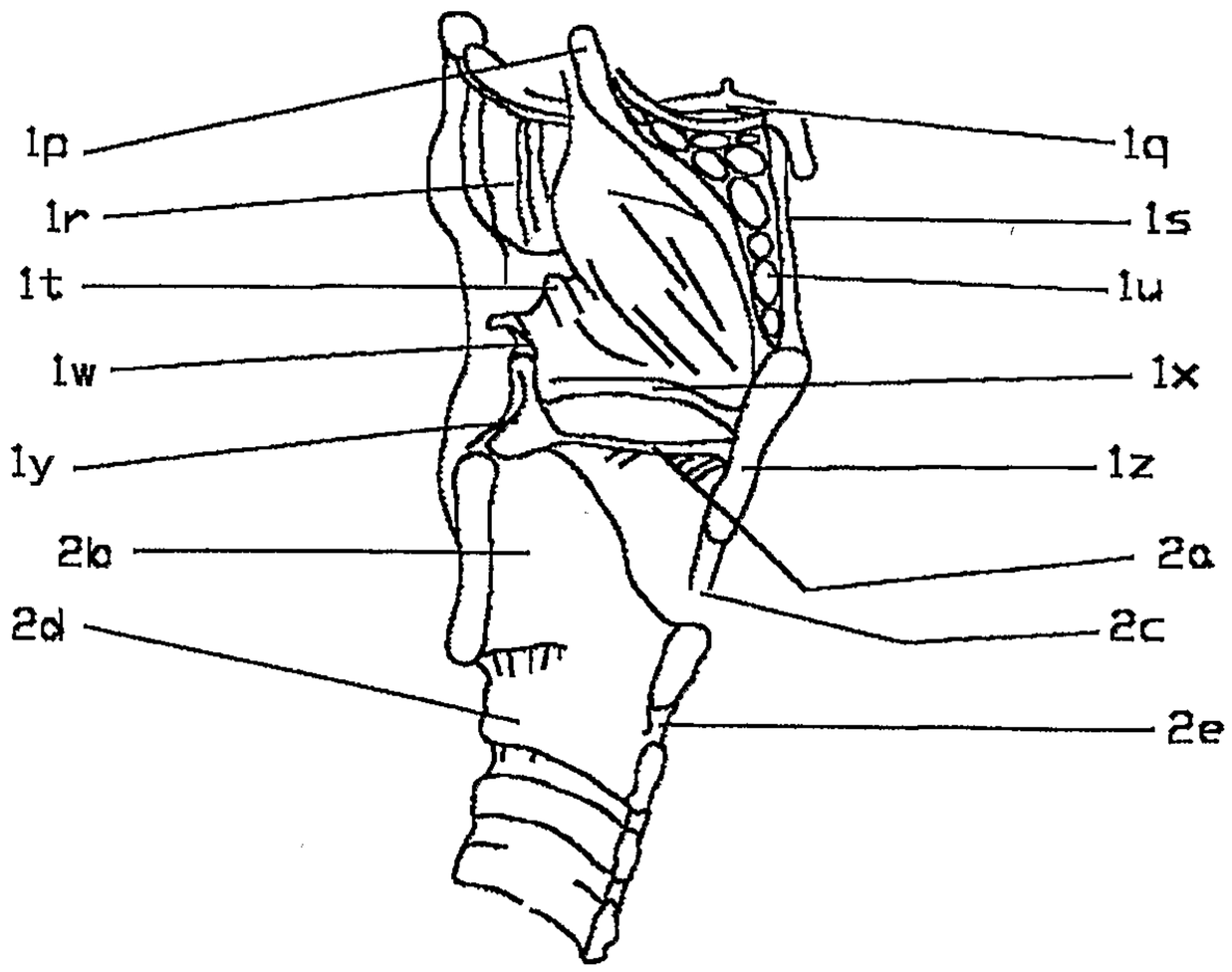

(c) Sagittal section

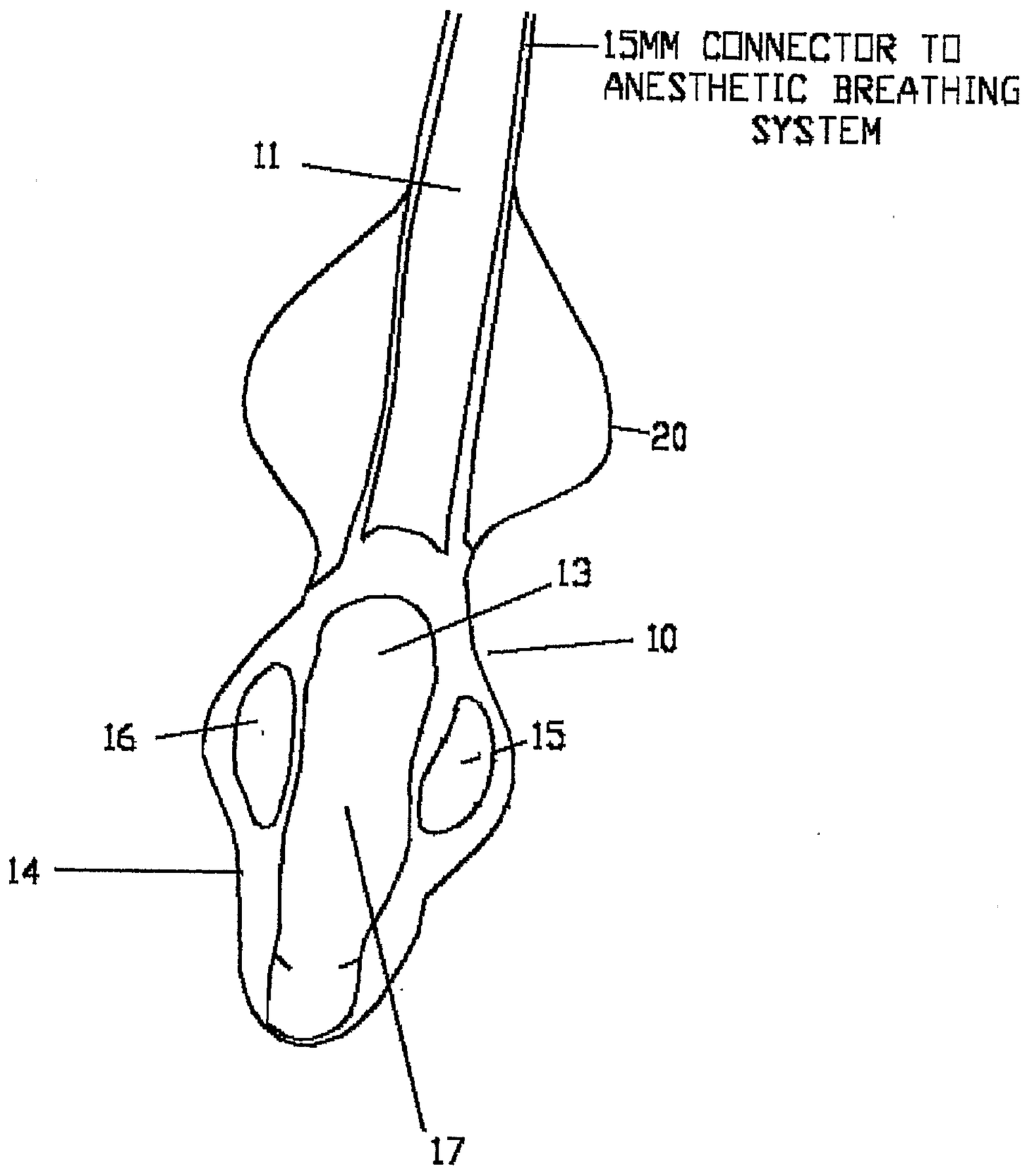
15MM CONNECTOR TO ANESTHETIC BREATHING SYSTEM
11
20
13
10
16
15
14
17

FIG 2

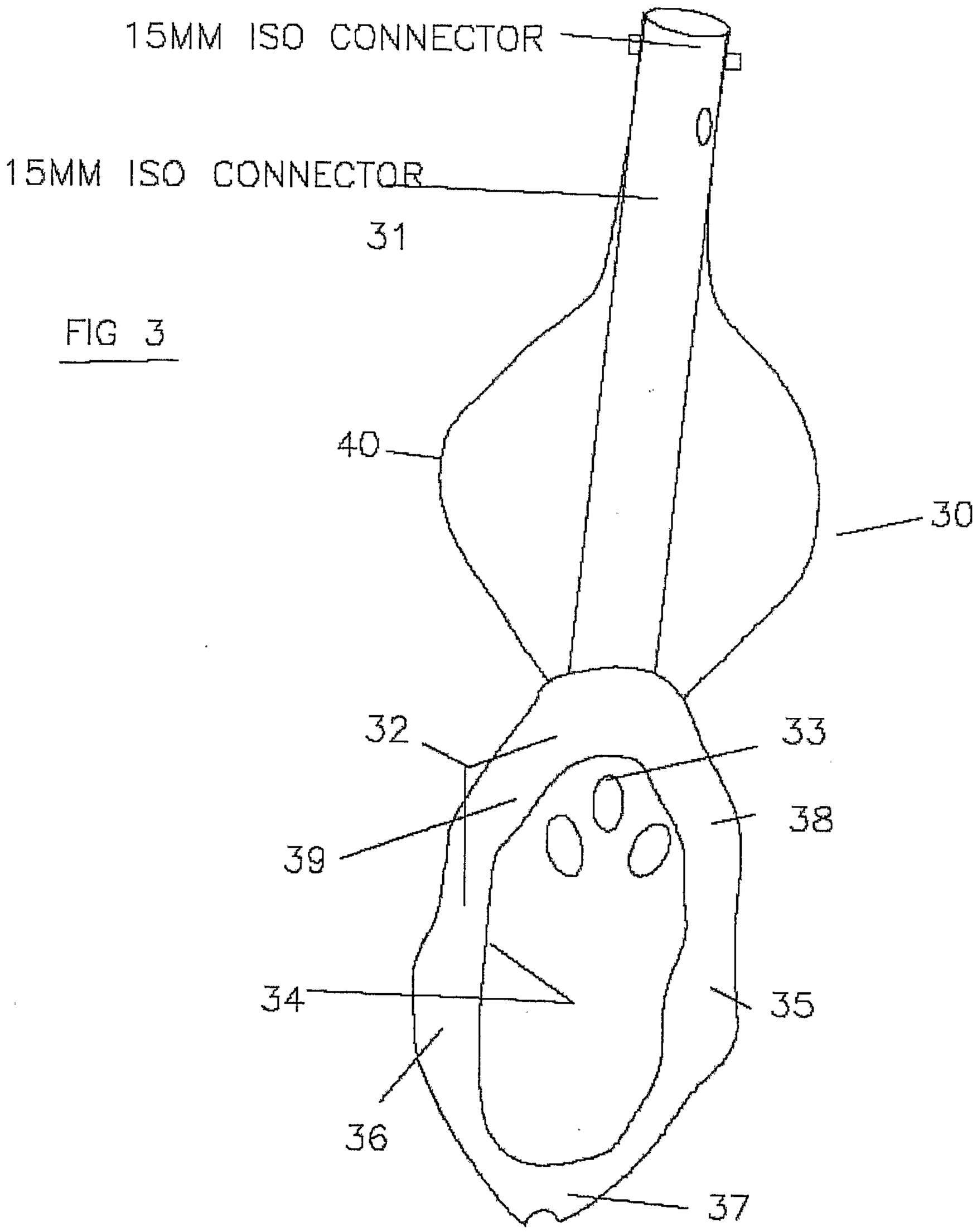

FIG 3

FRONTAL VIEW OF NLA

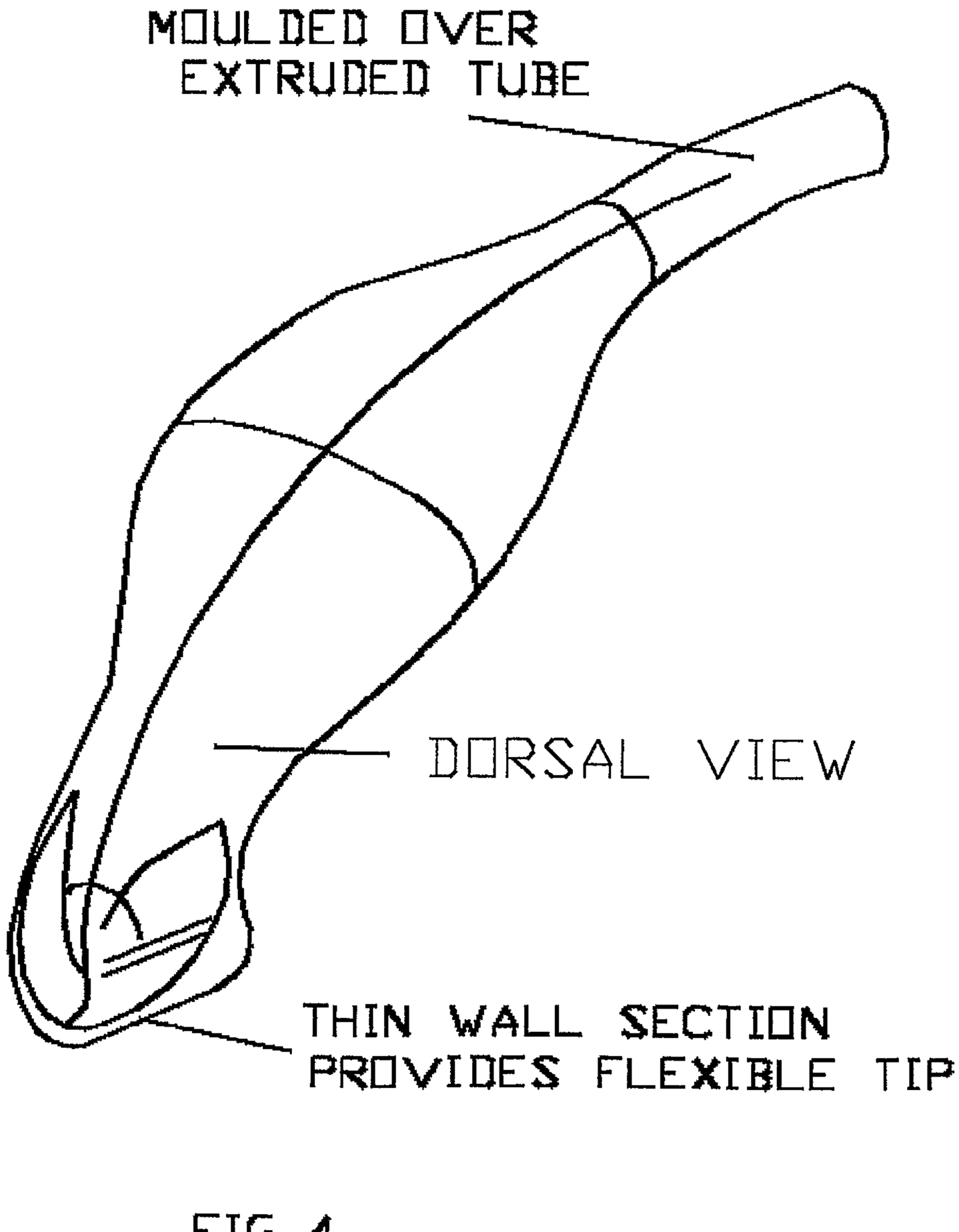
MOULDED OVER
EXTRUDED TUBE
DORSAL VIEW
THIN WALL SECTION
PROVIDES FLEXIBLE TIP

FIG 4

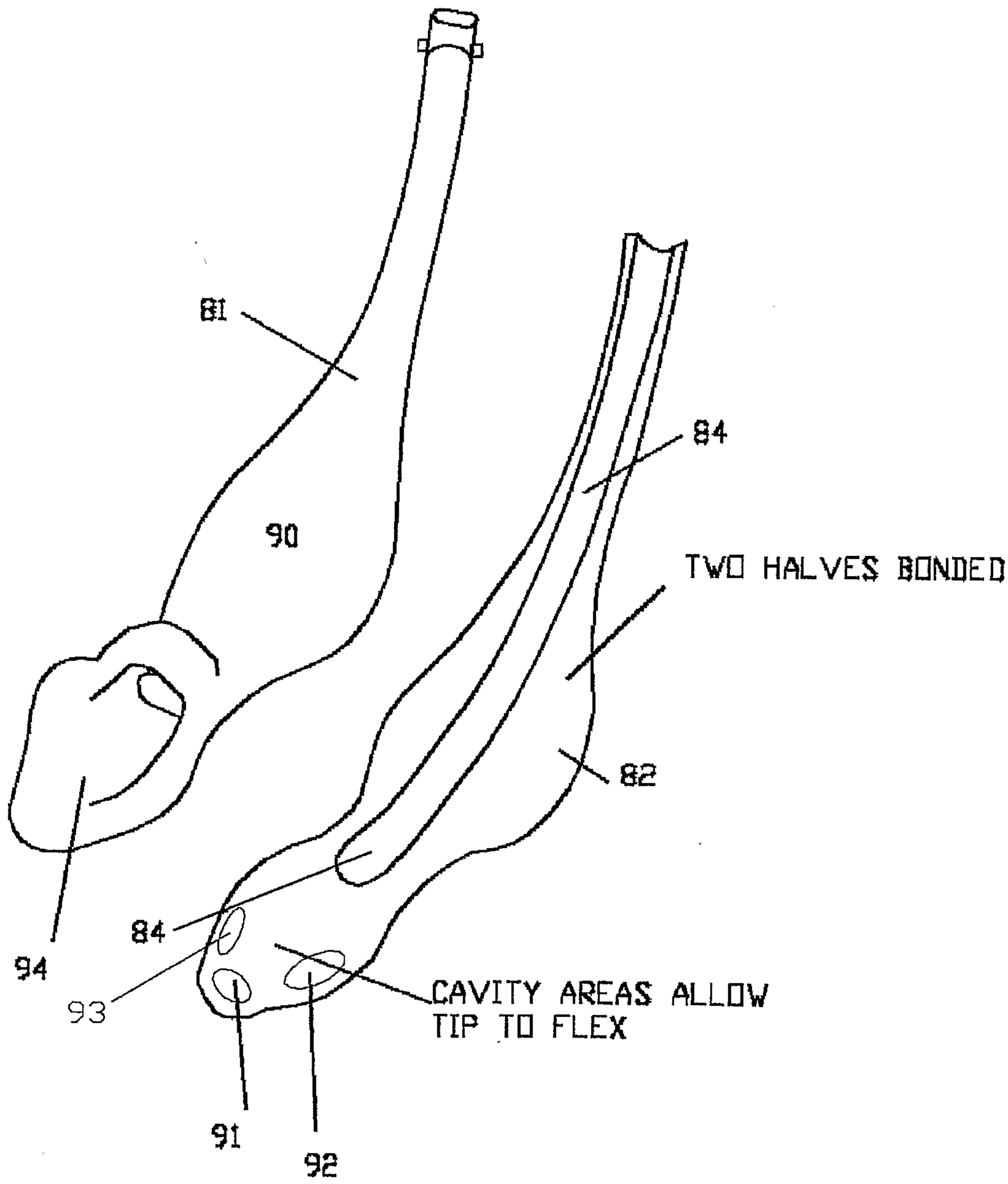
81
90
84
TWO HALVES BONDED
82
94
84
93
CAVITY AREAS ALLOW
TIP TO FLEX
91
92

FIG 5

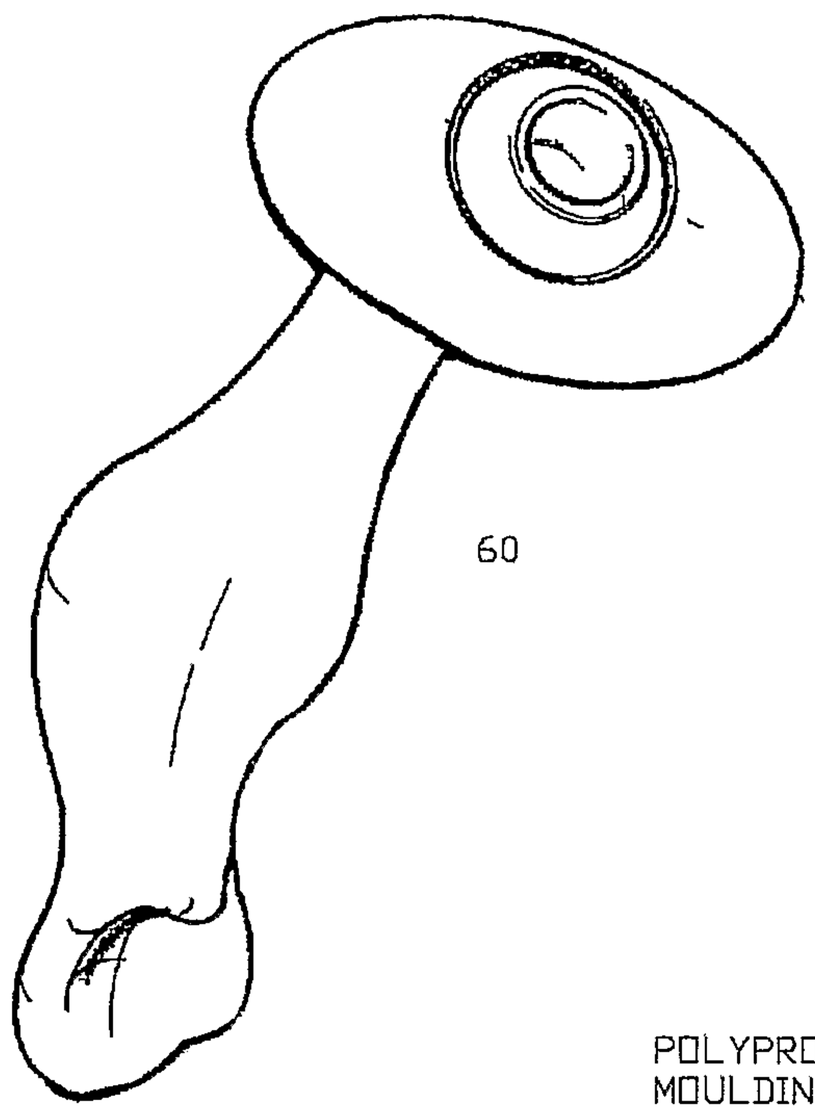
60

FIG 6

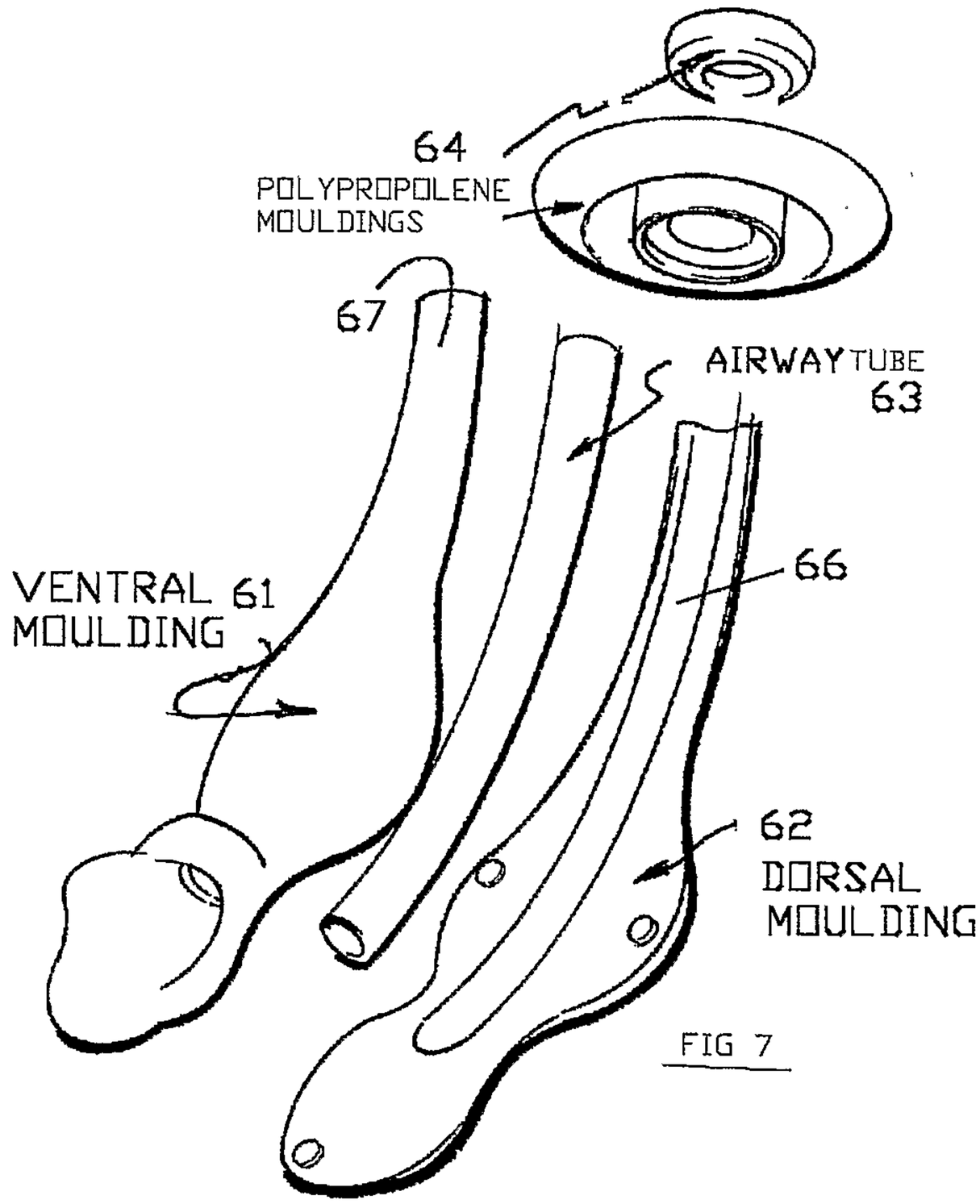
64
POLYPROPOLENE
MOULDINGS
67
AIRWAY TUBE
63
66
VENTRAL 61
MOULDING
62
DORSAL
MOULDING

FIG 7

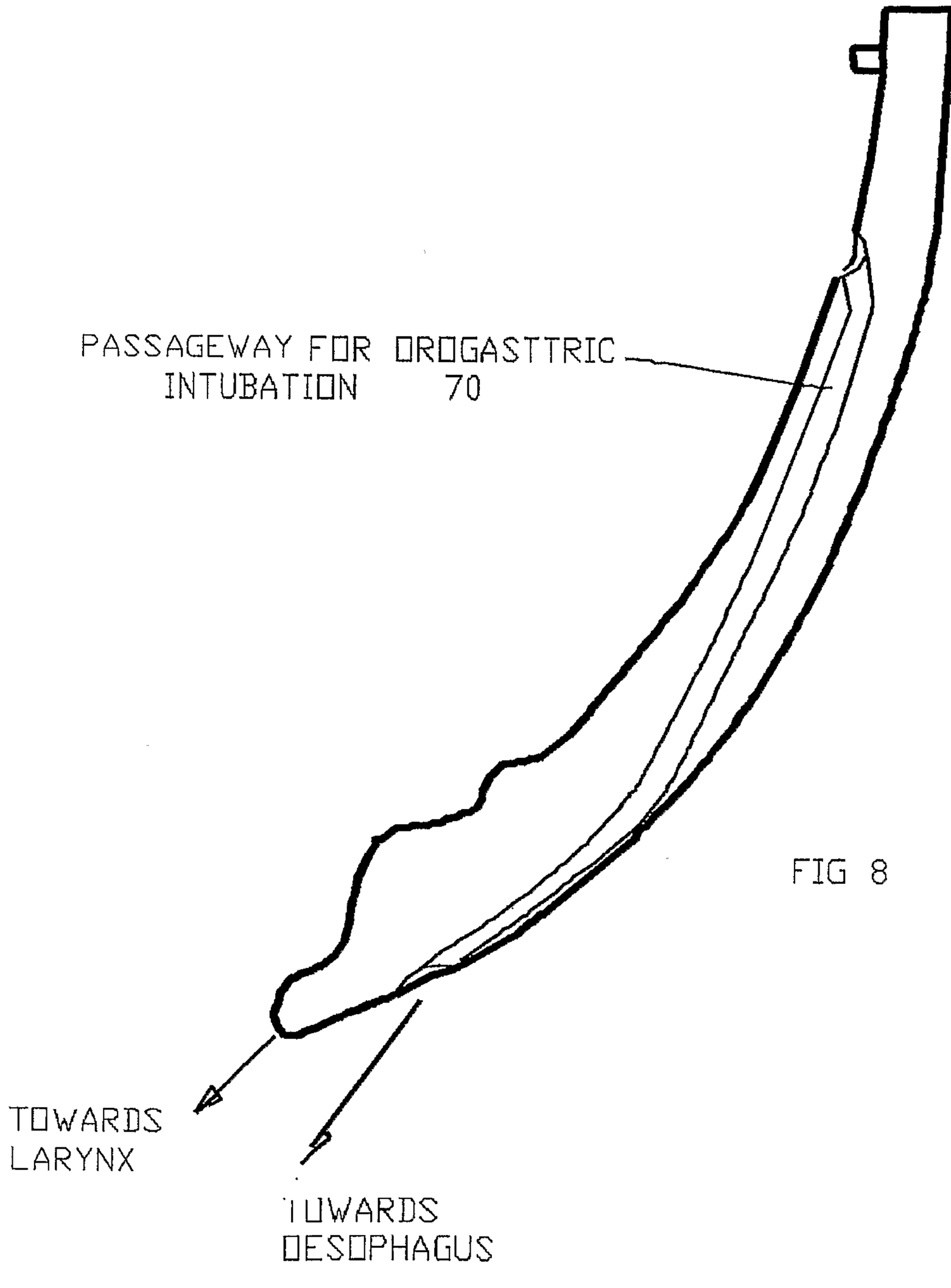
PASSAGEWAY FOR OROGASTTRIC INTUBATION 70
TOWARDS LARYNX
TOWARDS OESOPHAGUS

FIG 8

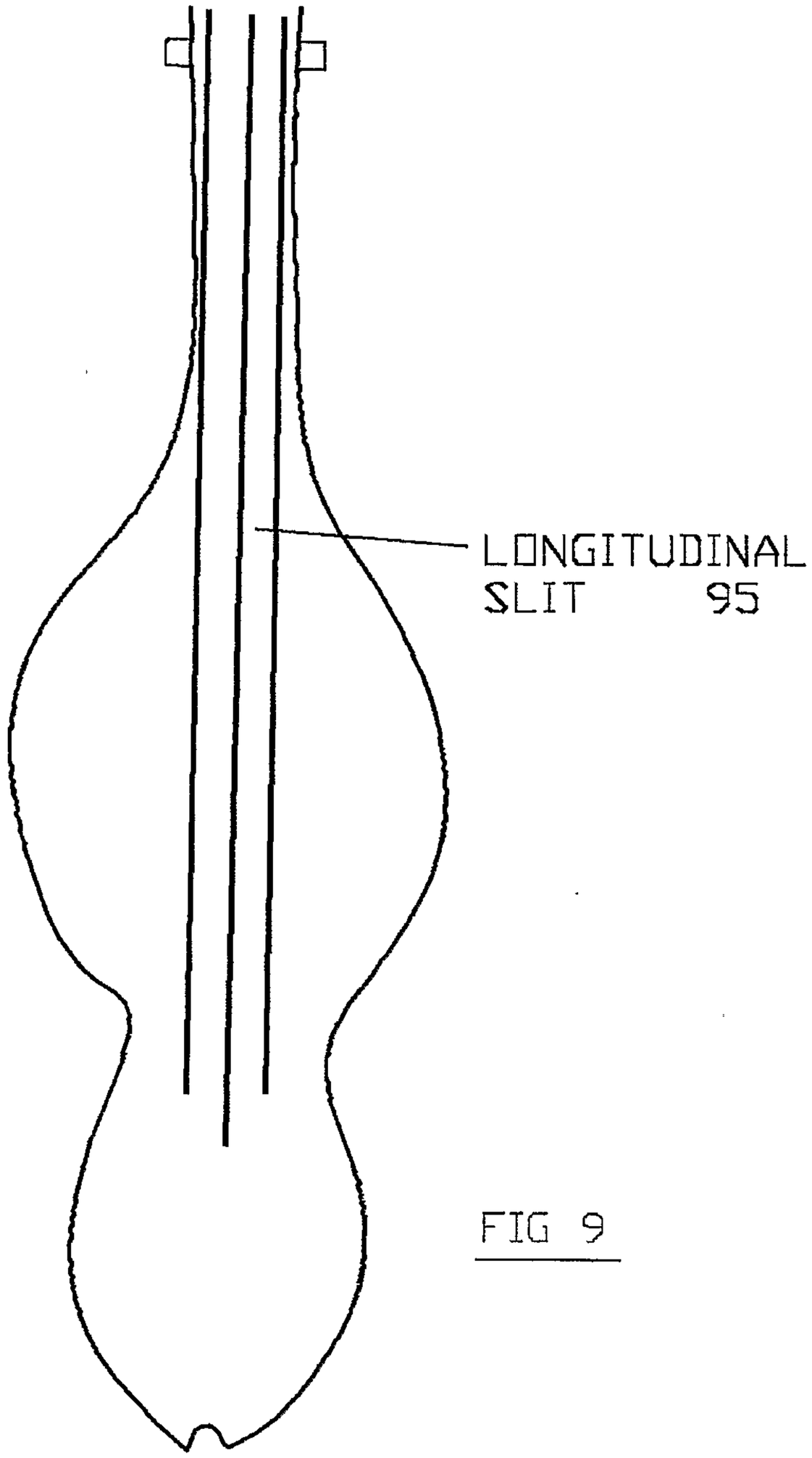

FIG 9

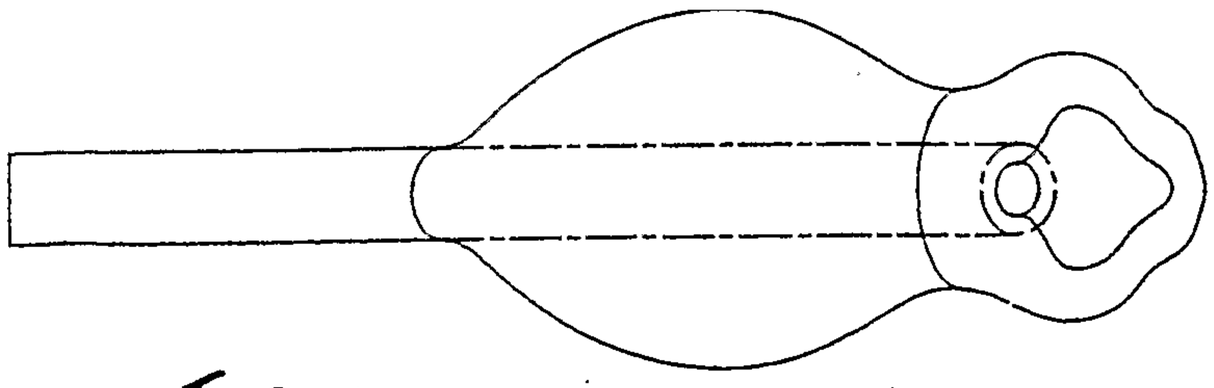

FIG 10.1

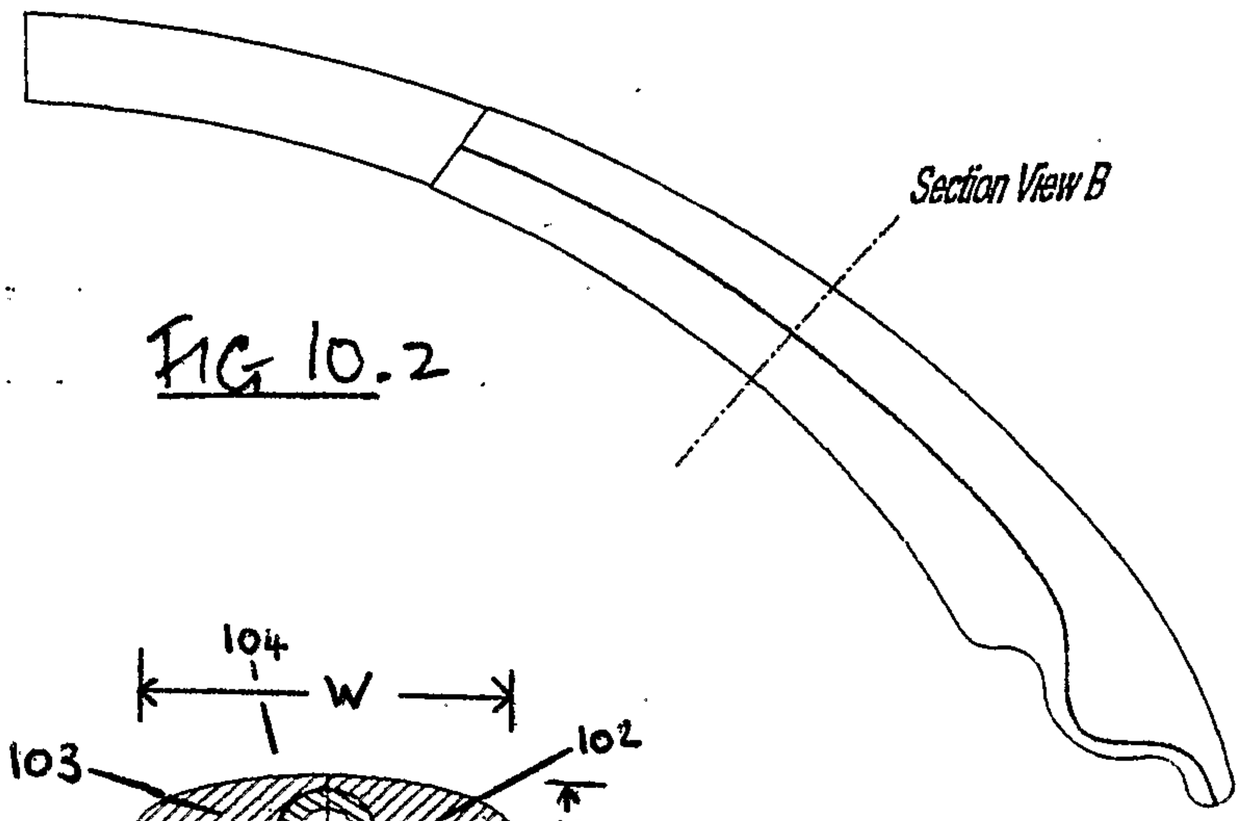

FIG 10.2

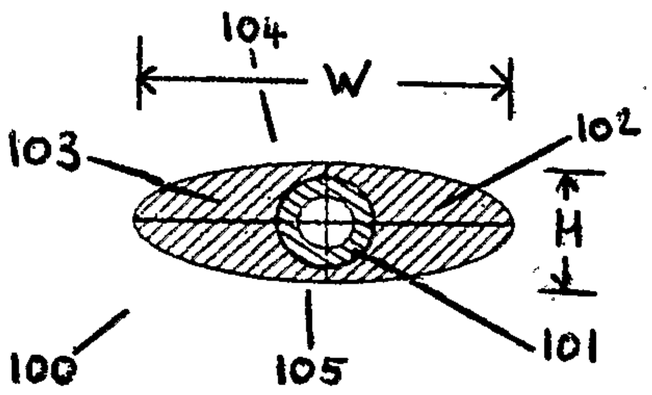

Section View B

FIG 10.3

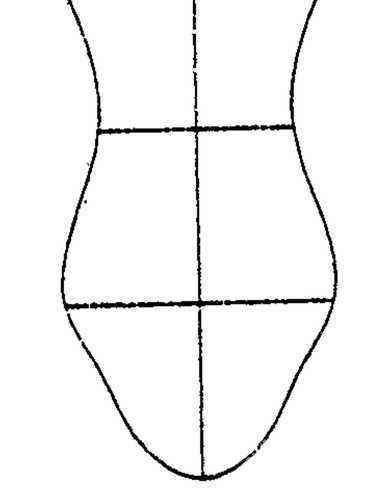

Developed view C
(Folded Flat)

FIG 10.5

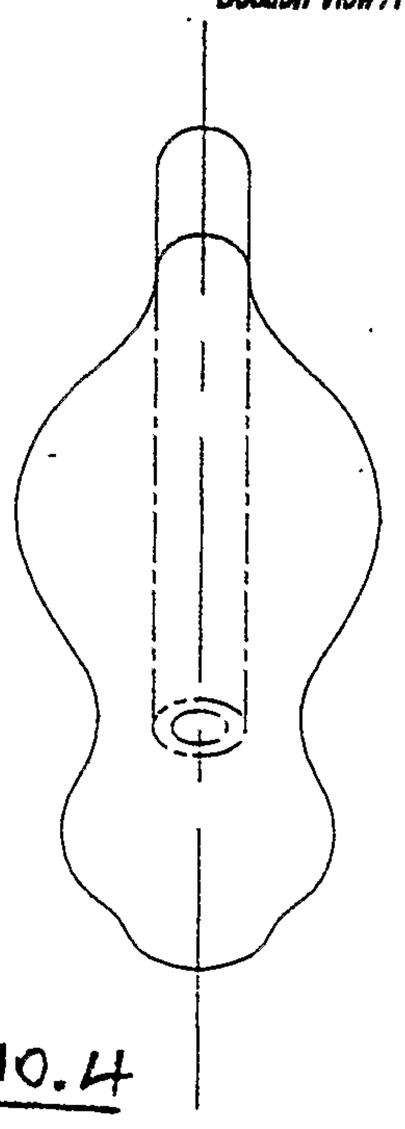

FIG 10.4

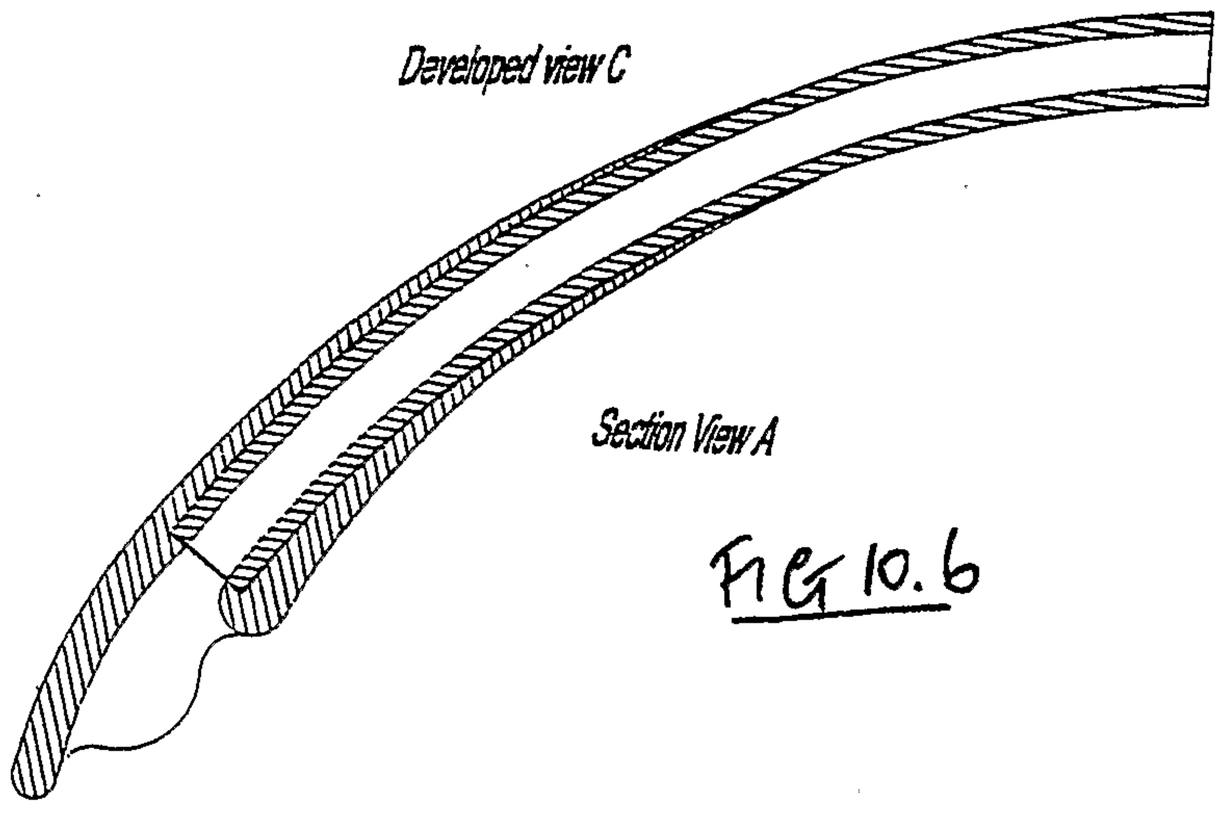

FIG 10.6

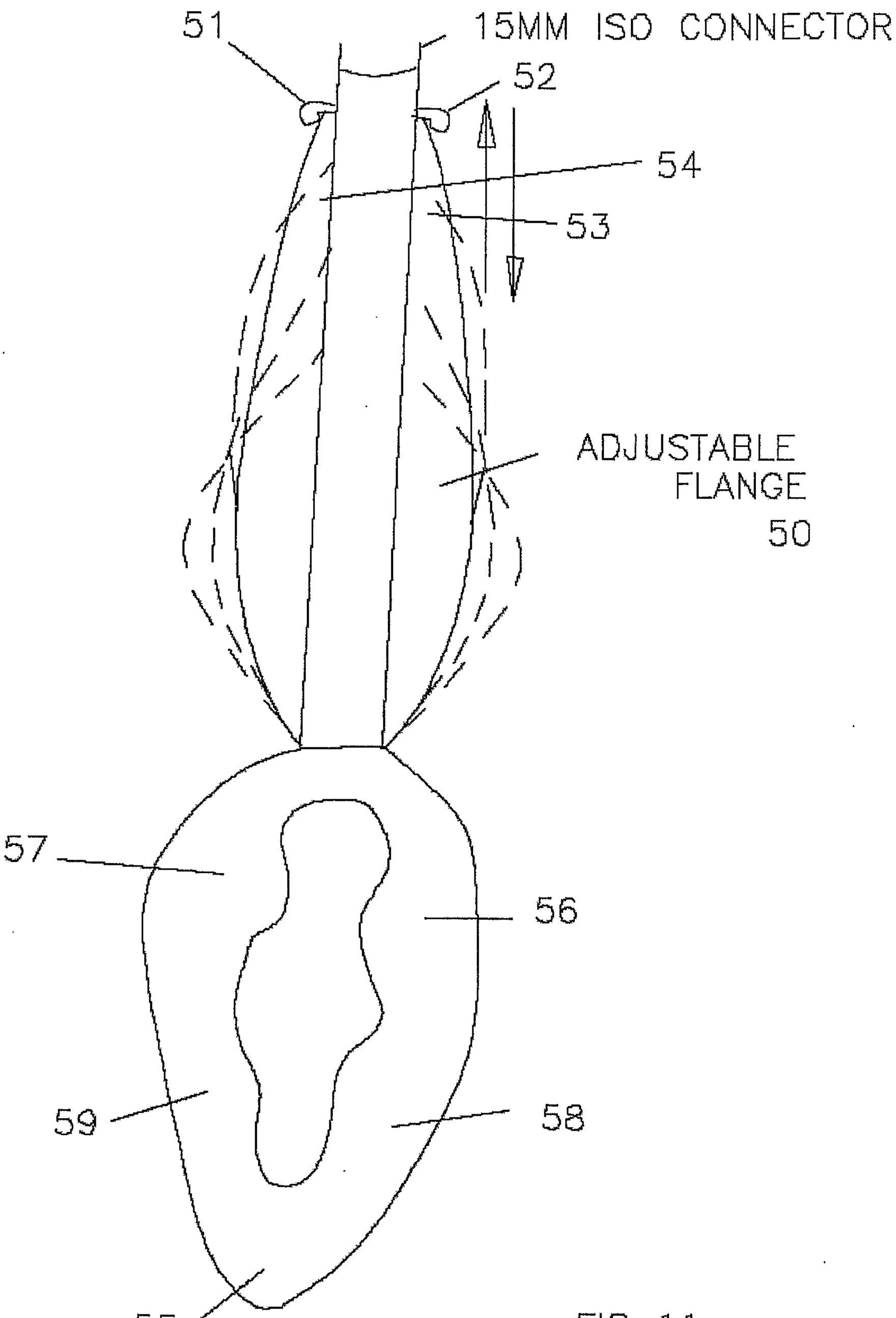

FIG 11

FRONTAL VIEW

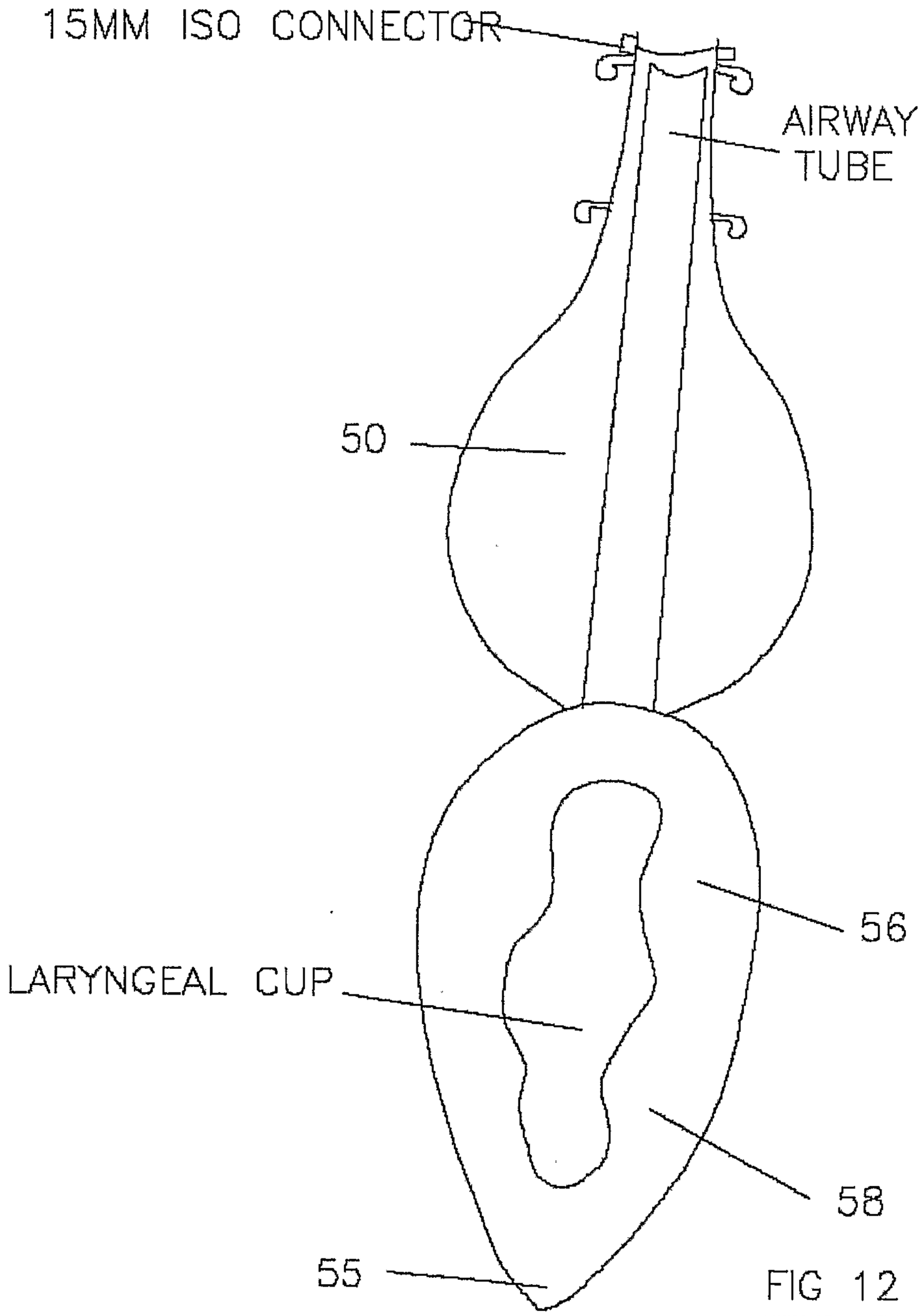

FIG 12

FRONTAL VIEW

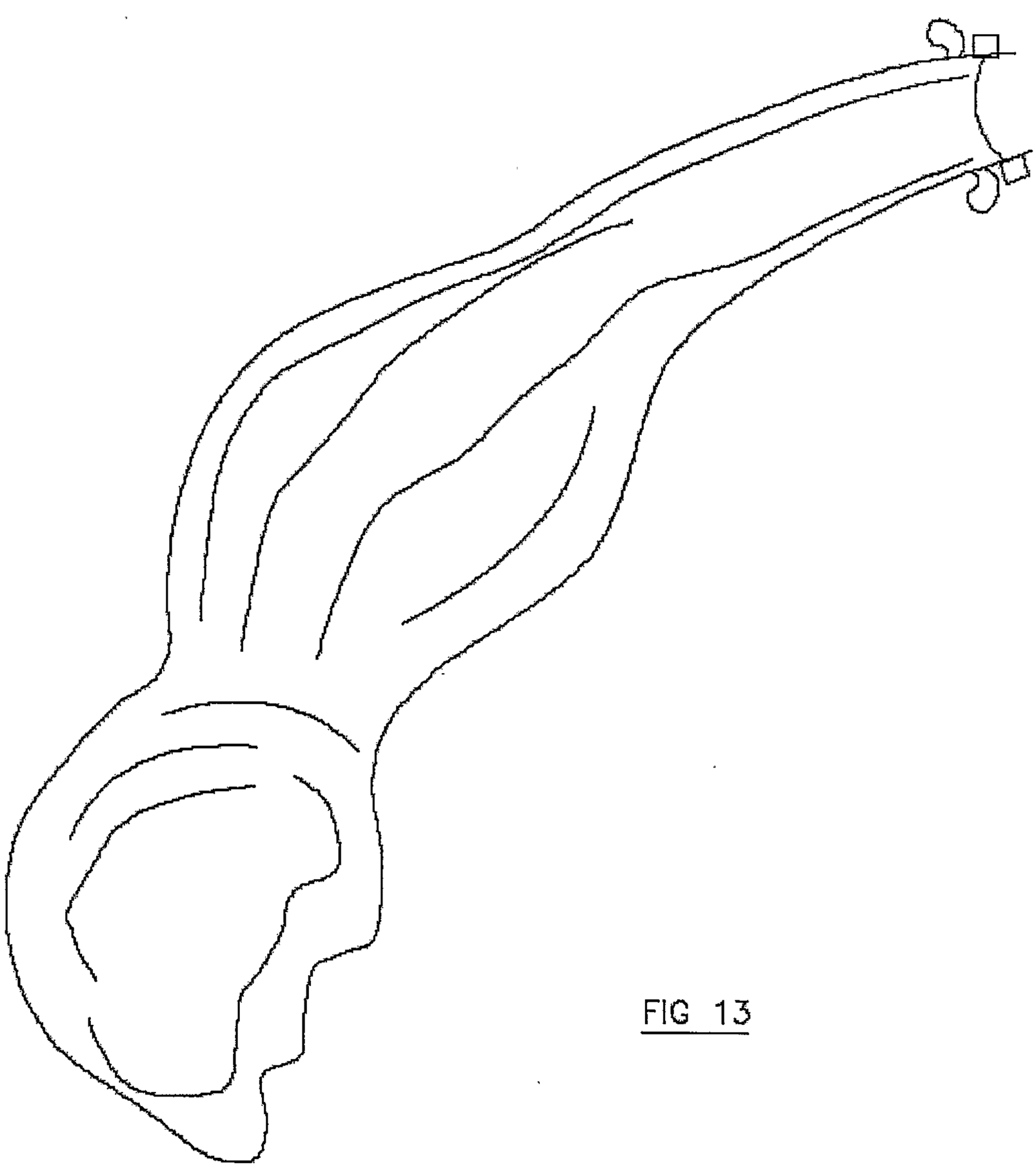

FIG 13

LATERAL VIEW

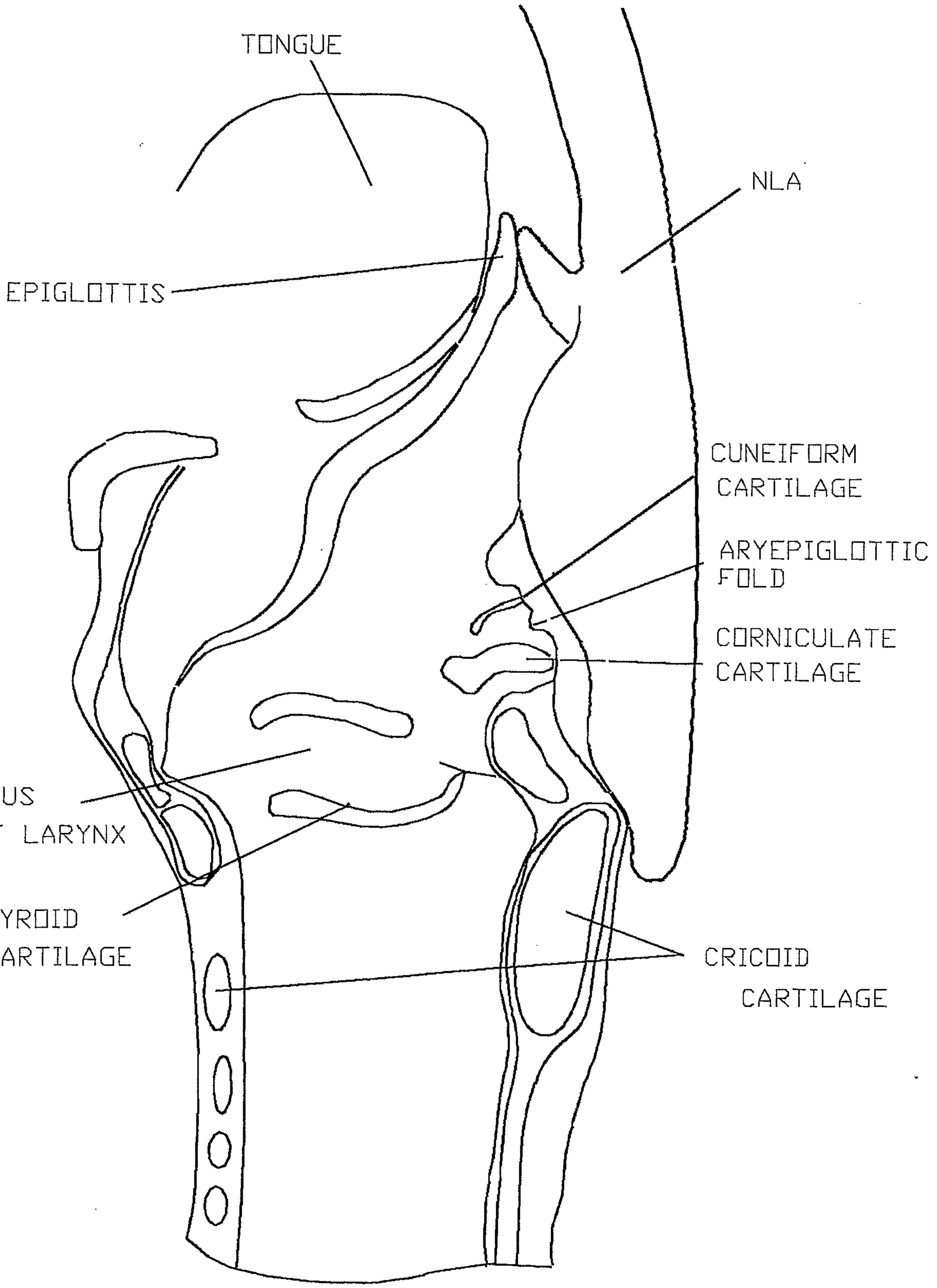
TONGUE
NLA
EPIGLOTTIS
CUNEIFORM CARTILAGE
ARYEPIGLOTTIC FOLD
CORNICULATE CARTILAGE
SINUS OF LARYNX
THYROID CARTILAGE
CRICOID CARTILAGE

FIG 14

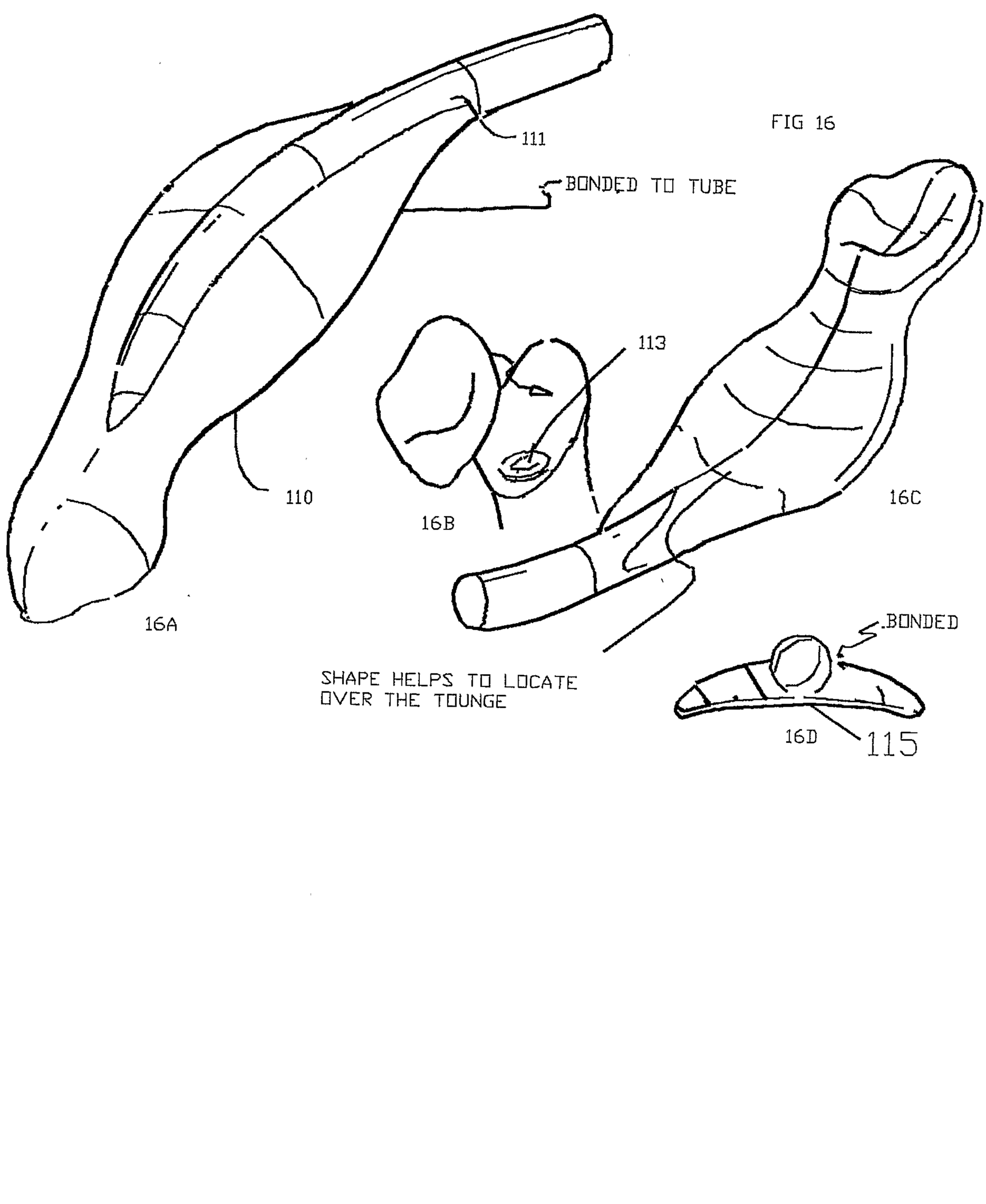
111
BONDED TO TUBE
113
110
16B
16C
16A
SHAPE HELPS TO LOCATE
OVER THE TOUNGE
BONDED
16D
115

FIG 16

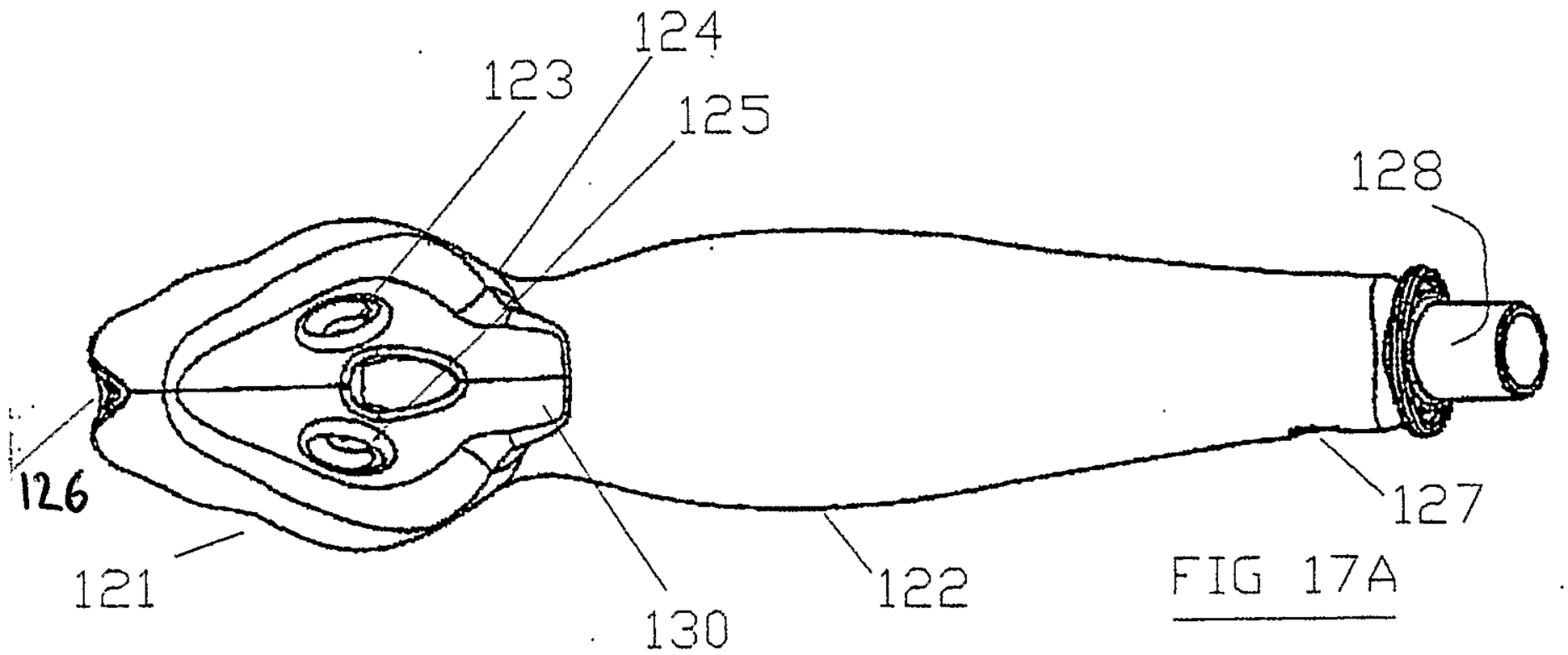

FIG 17A

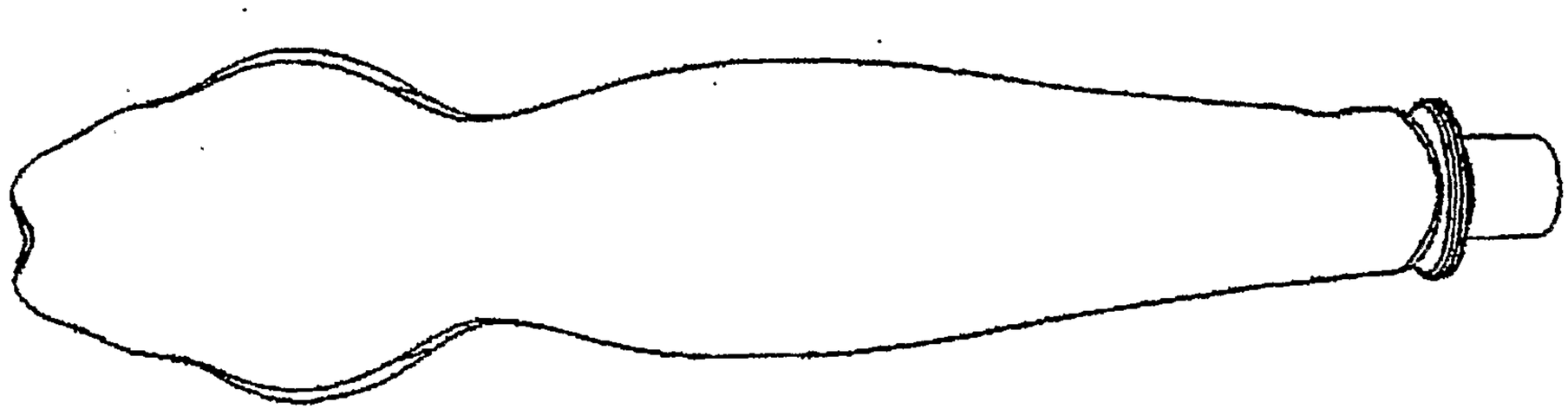

FIG 17B

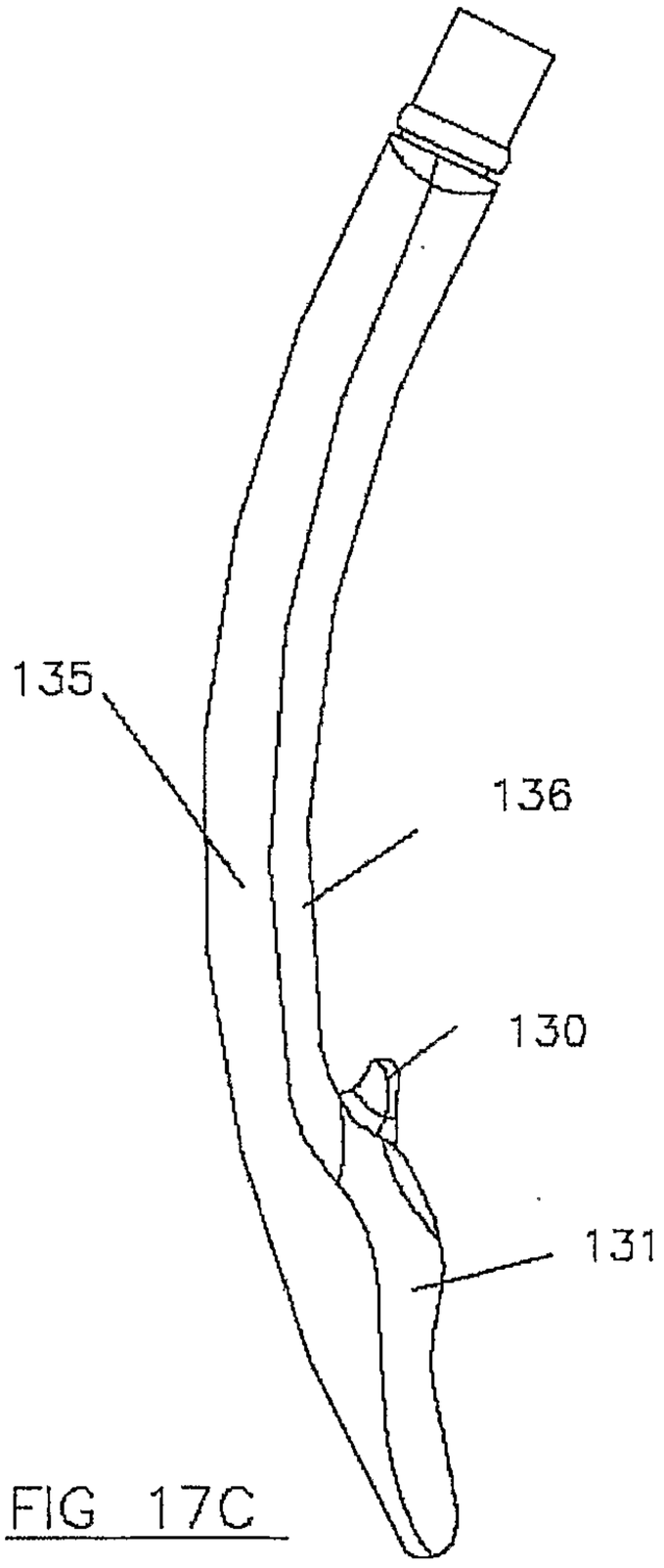

FIG 17C

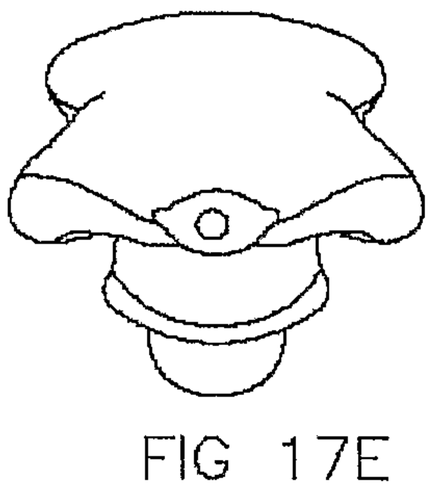

FIG 17E

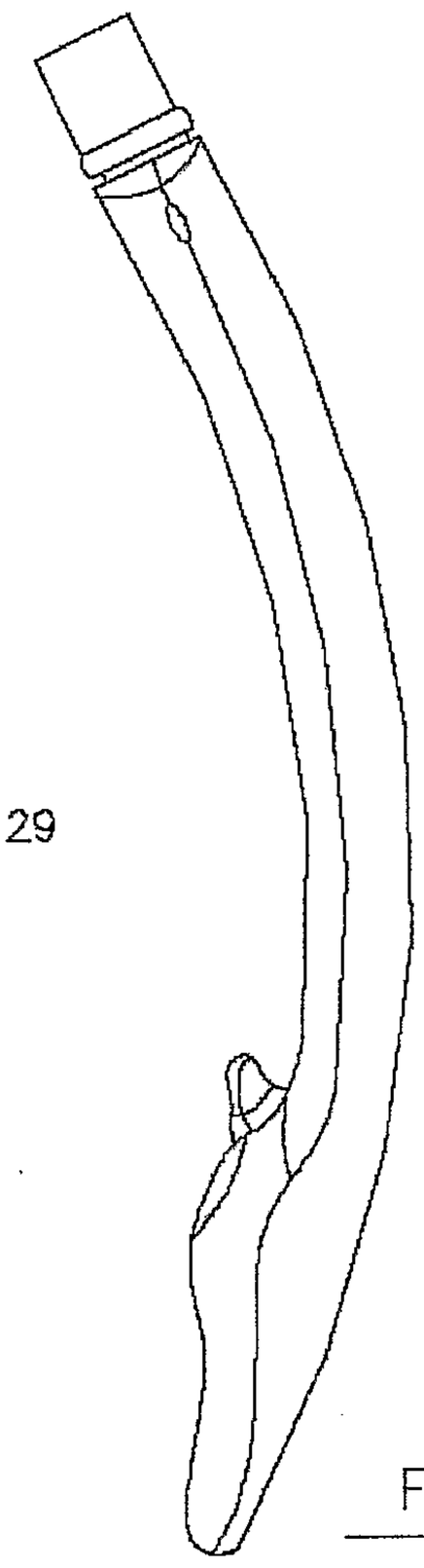

FIG 17D

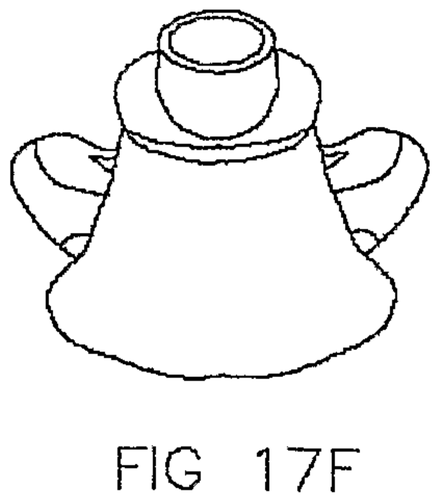

FIG 17F

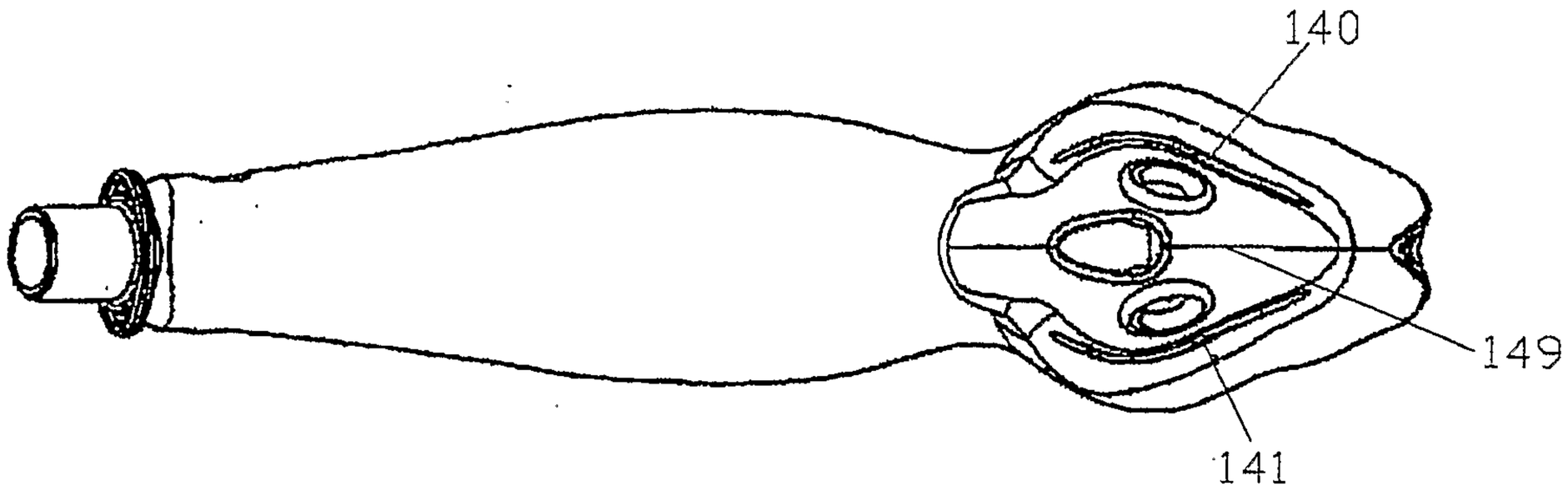

FIG 18A

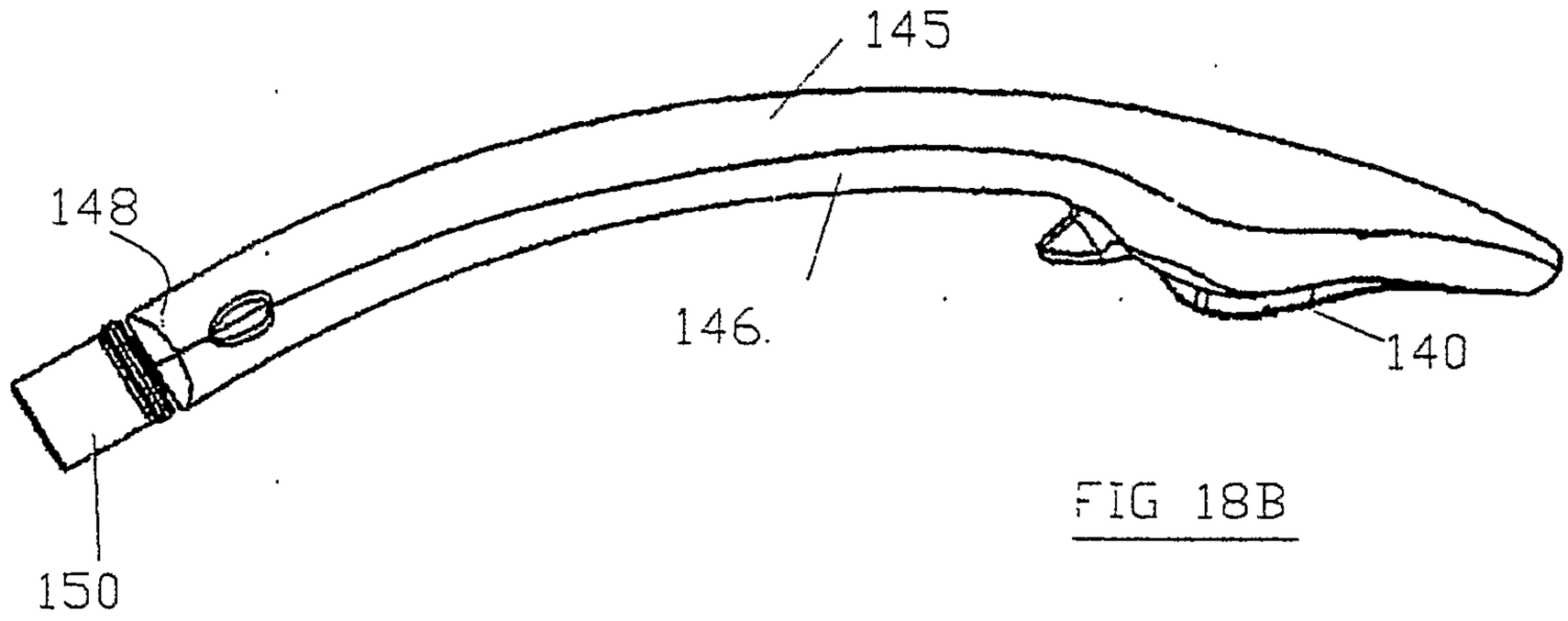

FIG 18B

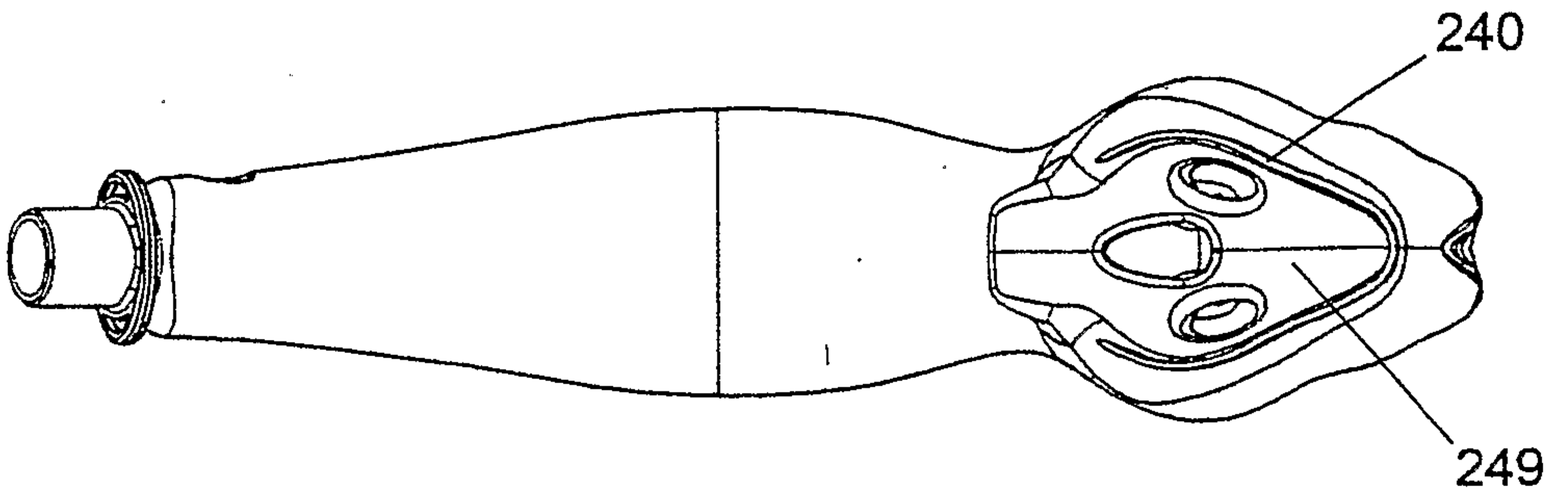

FIG. 18C

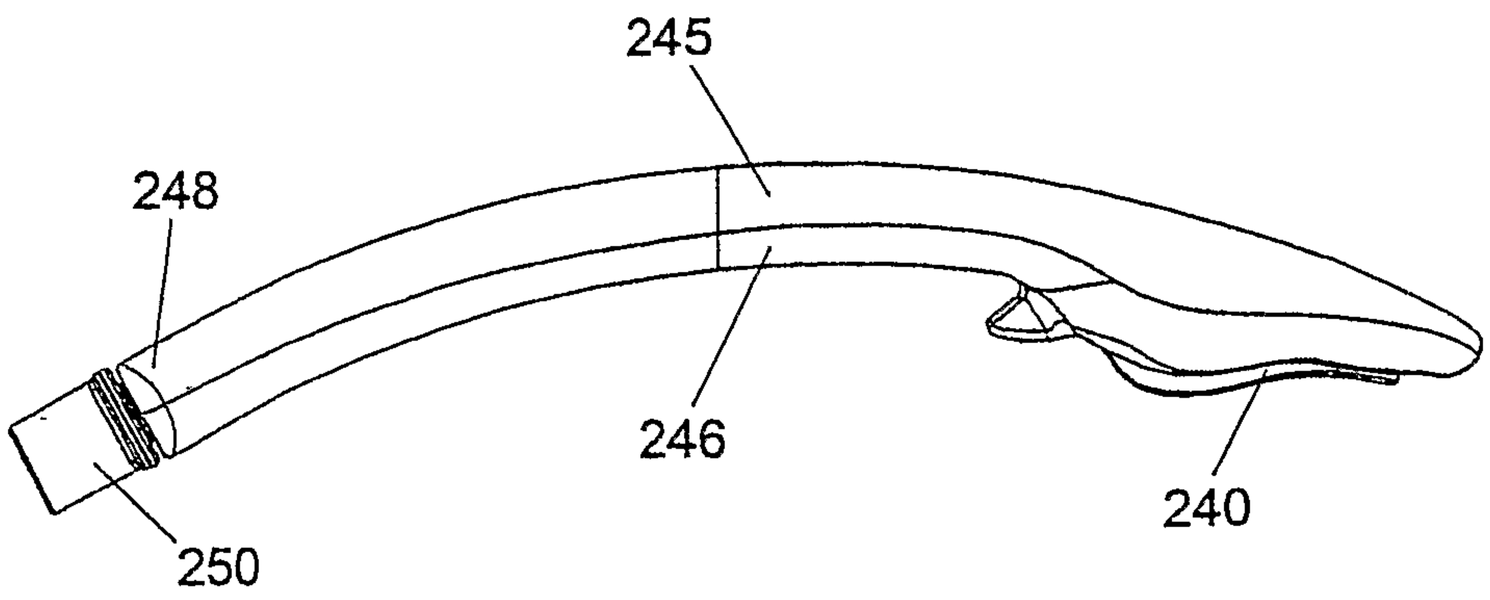

FIG. 18D

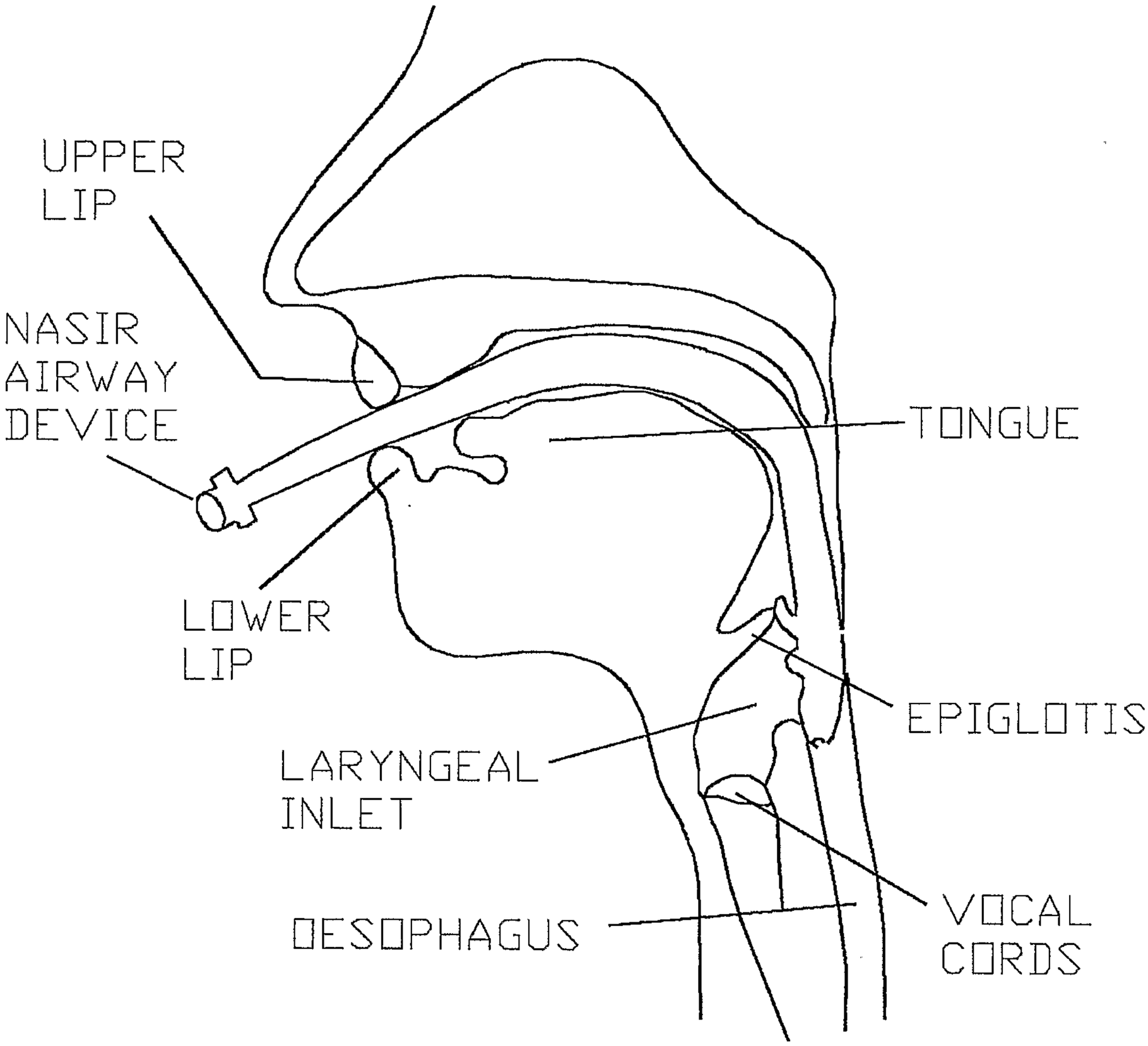

DEVICE IN SITU - FIG 19

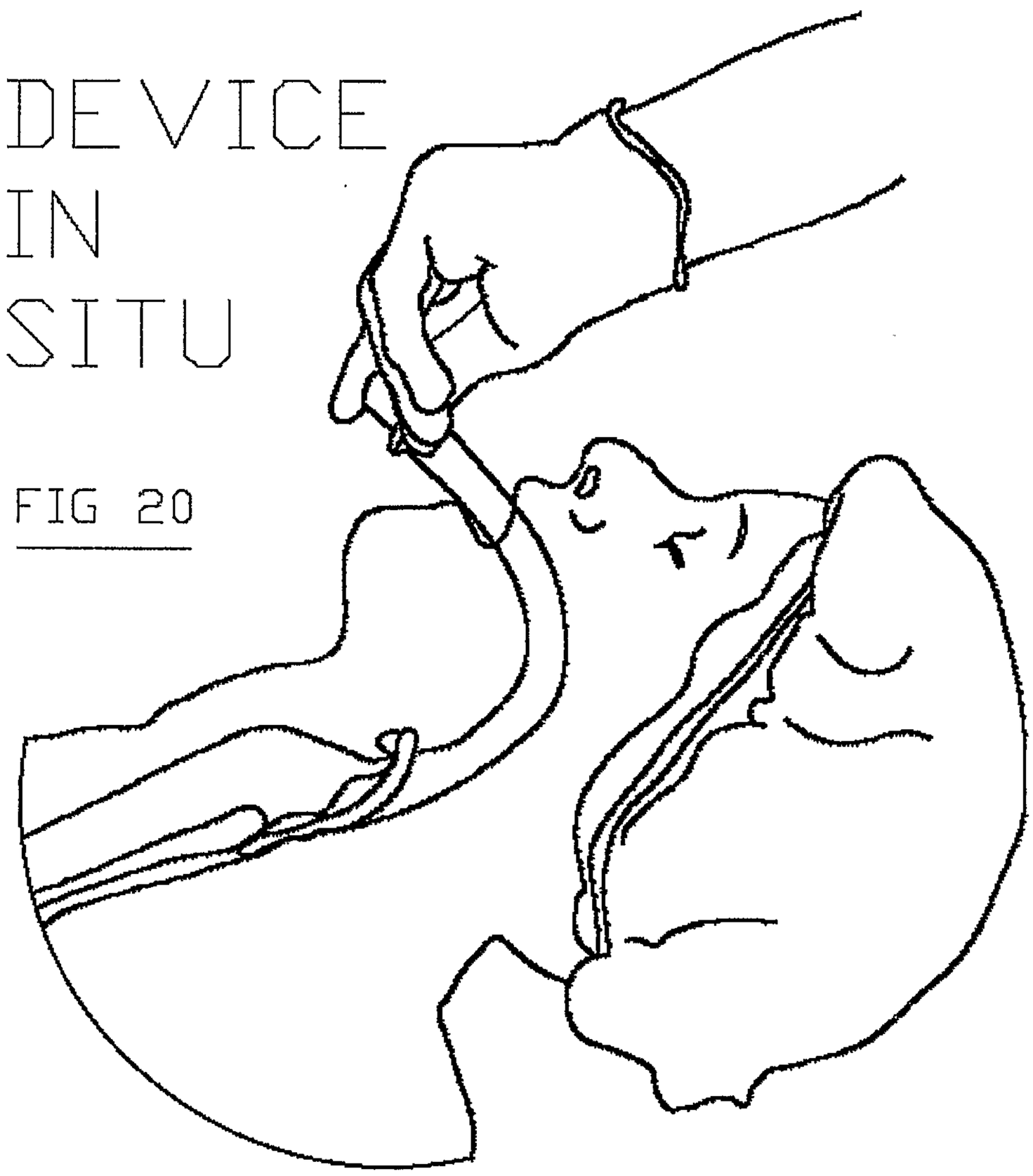

FIG 20

DEVICE IN SITU

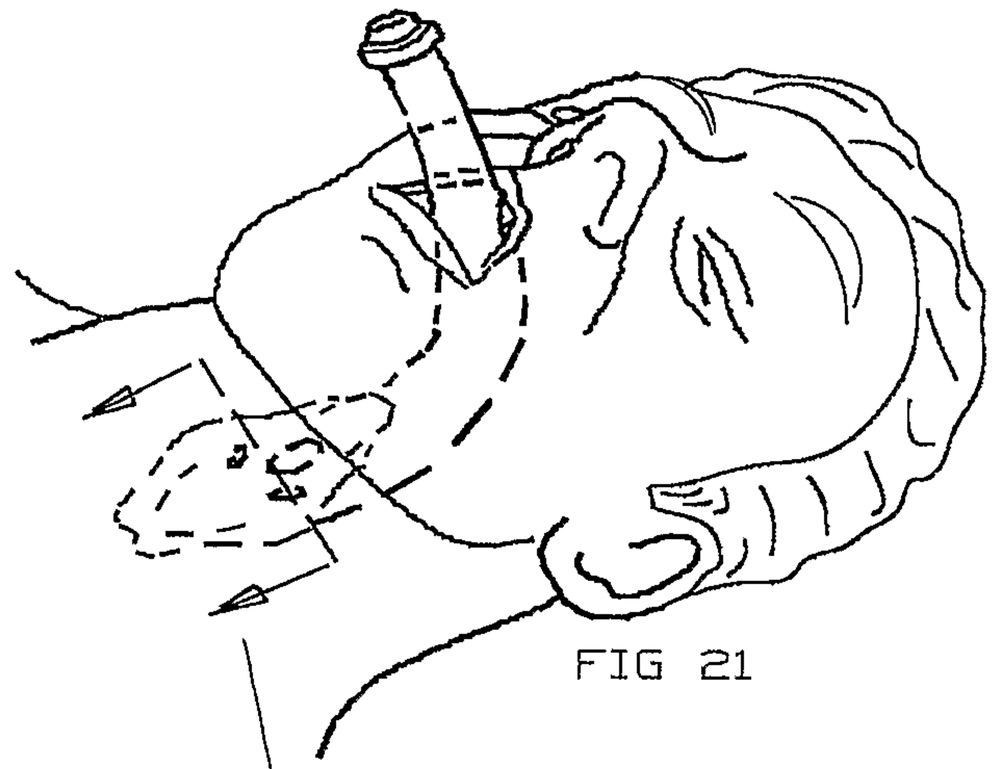

FIG 21

FIG 22 SECTION VIEW IN DIRECTION SHOWN

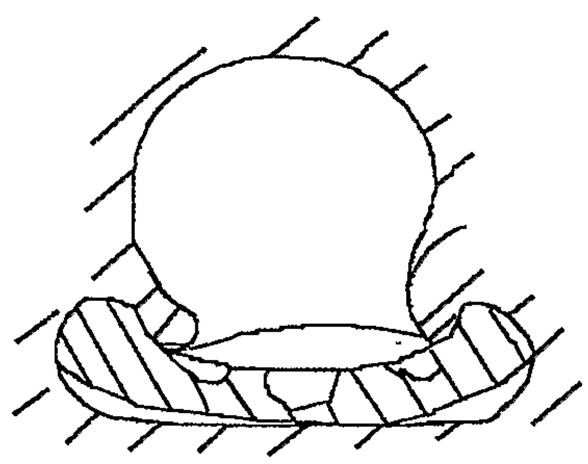

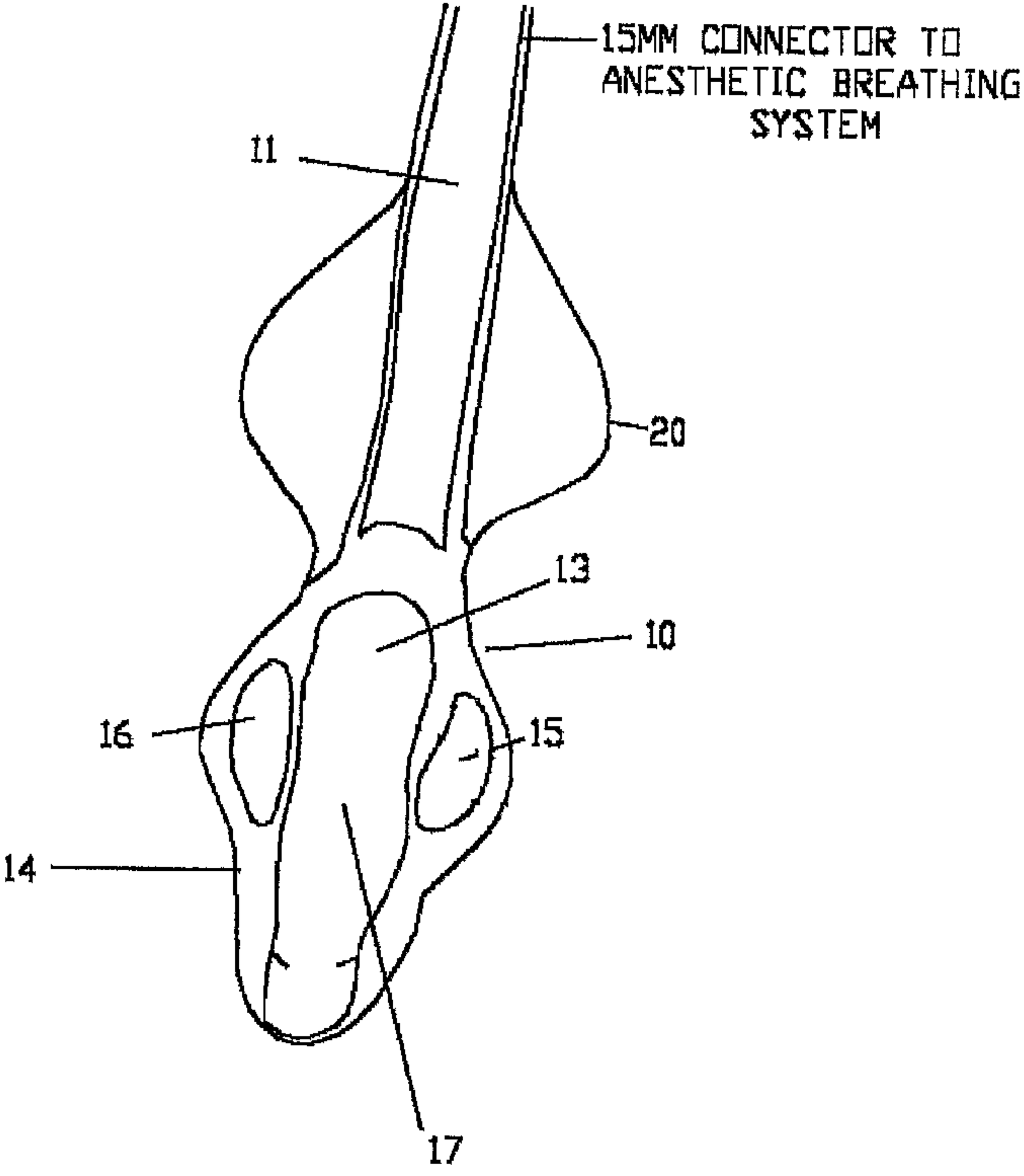
15MM CONNECTOR TO ANESTHETIC BREATHING SYSTEM
11
20
13
10
16
15
14
17