April 10, 1934. A. F. CONSTABLE 1,953,954

REACTION APPARATUS

Filed April 26, 1932 4 Sheets-Sheet 1

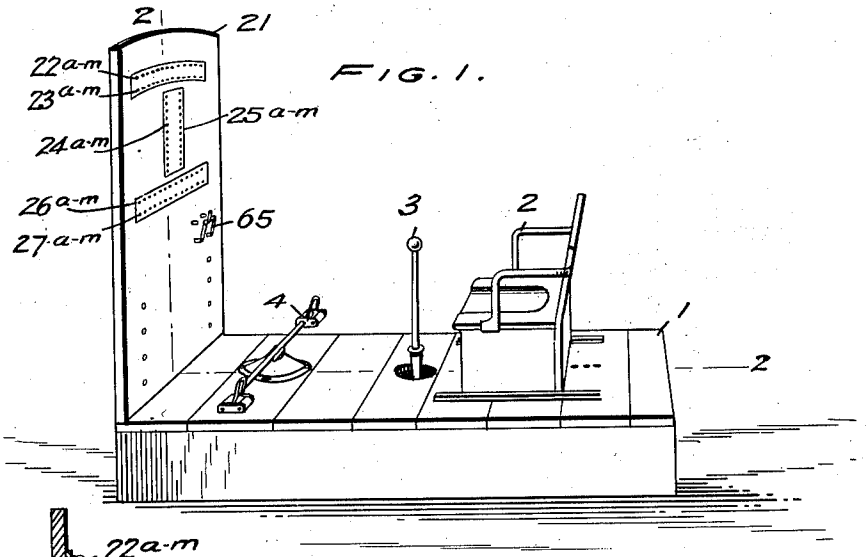

FIG. 1.

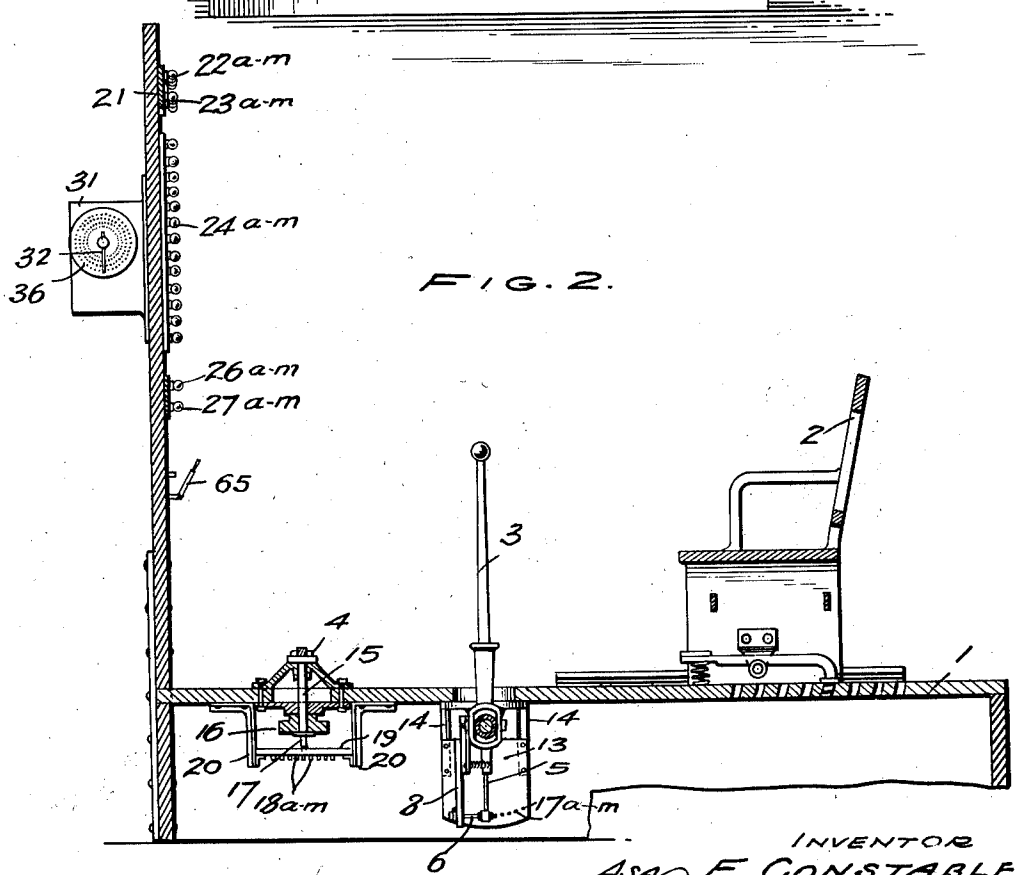

FIG. 2.

INVENTOR
ASA F. CONSTABLE
Francis H. Vanderwerken
BY Wade Roonty
ATTORNEYS

April 10, 1934. A. F. CONSTABLE 1,953,954

REACTION APPARATUS

Filed April 26, 1932 4 Sheets-Sheet 2

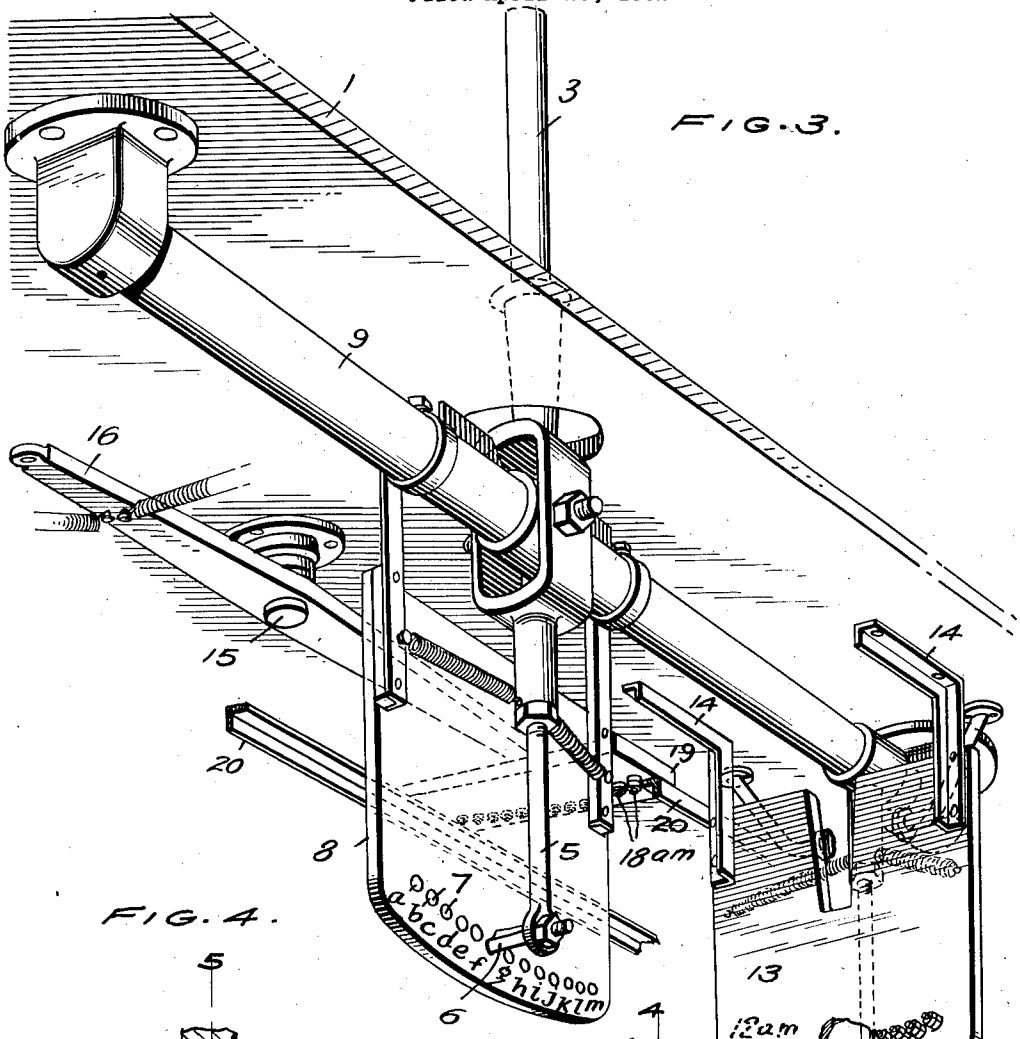

FIG. 3.

FIG. 4.

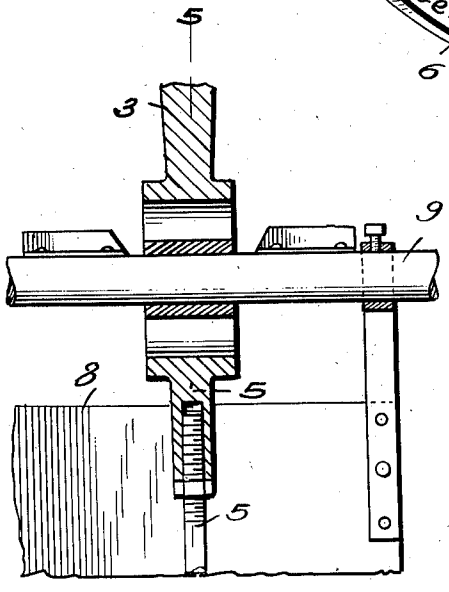

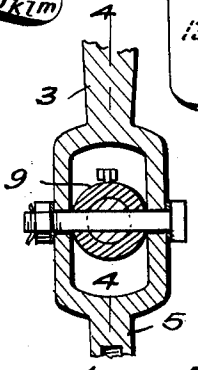

FIG. 5.

INVENTOR
ASA F. CONSTABLE
BY Francis H. Vanderwerker
Wadsworth
ATTORNEYS

April 10, 1934. A. F. CONSTABLE 1,953,954

REACTION APPARATUS

Filed April 26, 1932 4 Sheets-Sheet 3

FIG. 6.

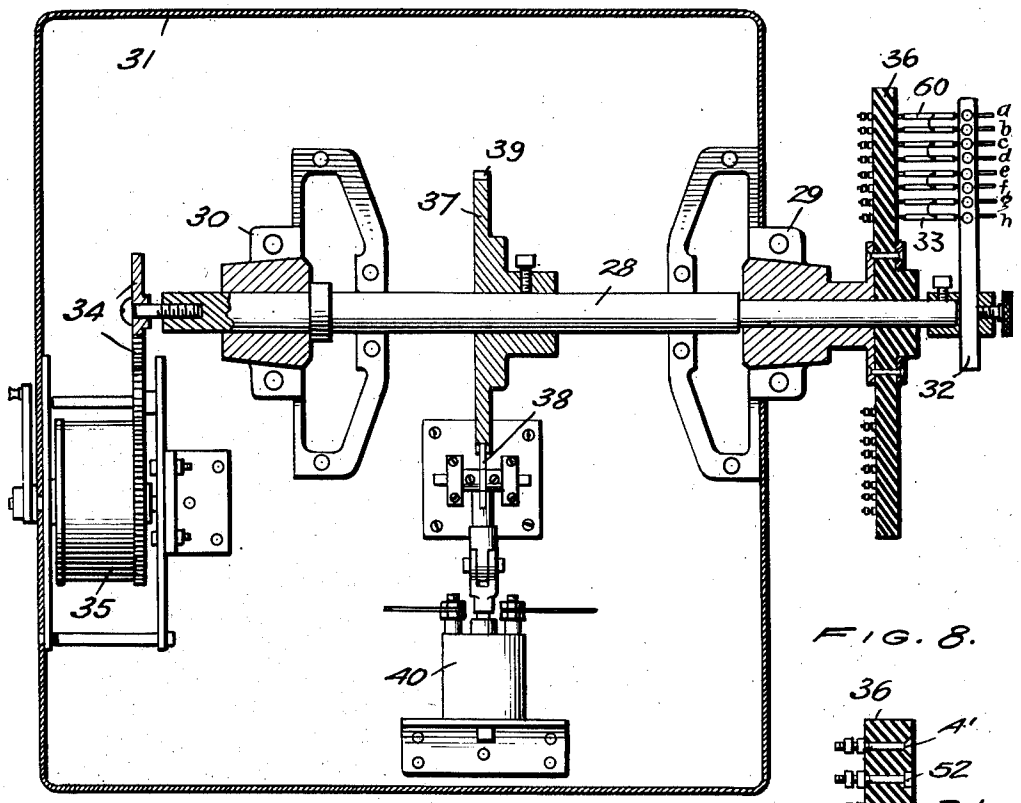

FIG. 8.

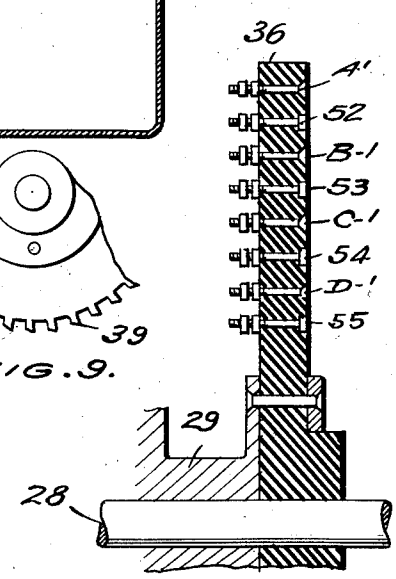

FIG. 7.

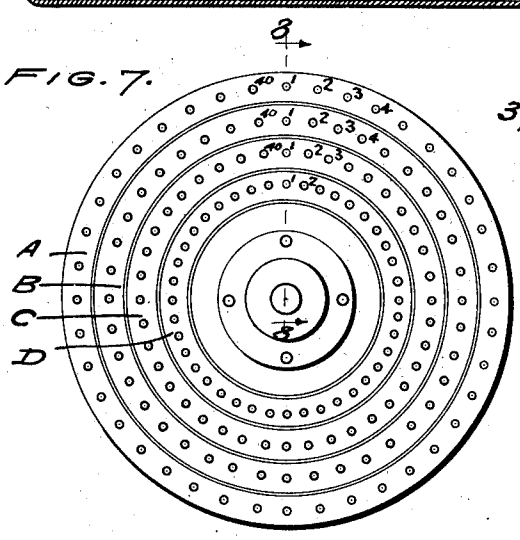

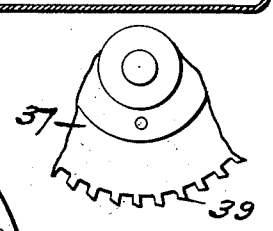

FIG. 9.

INVENTOR

ASA F. CONSTABLE

BY Francis H. Vanderwerken

Wade Roonty

ATTORNEYS

April 10, 1934. A. F. CONSTABLE 1,953,954

REACTION APPARATUS

Filed April 26, 1932 4 Sheets-Sheet 4

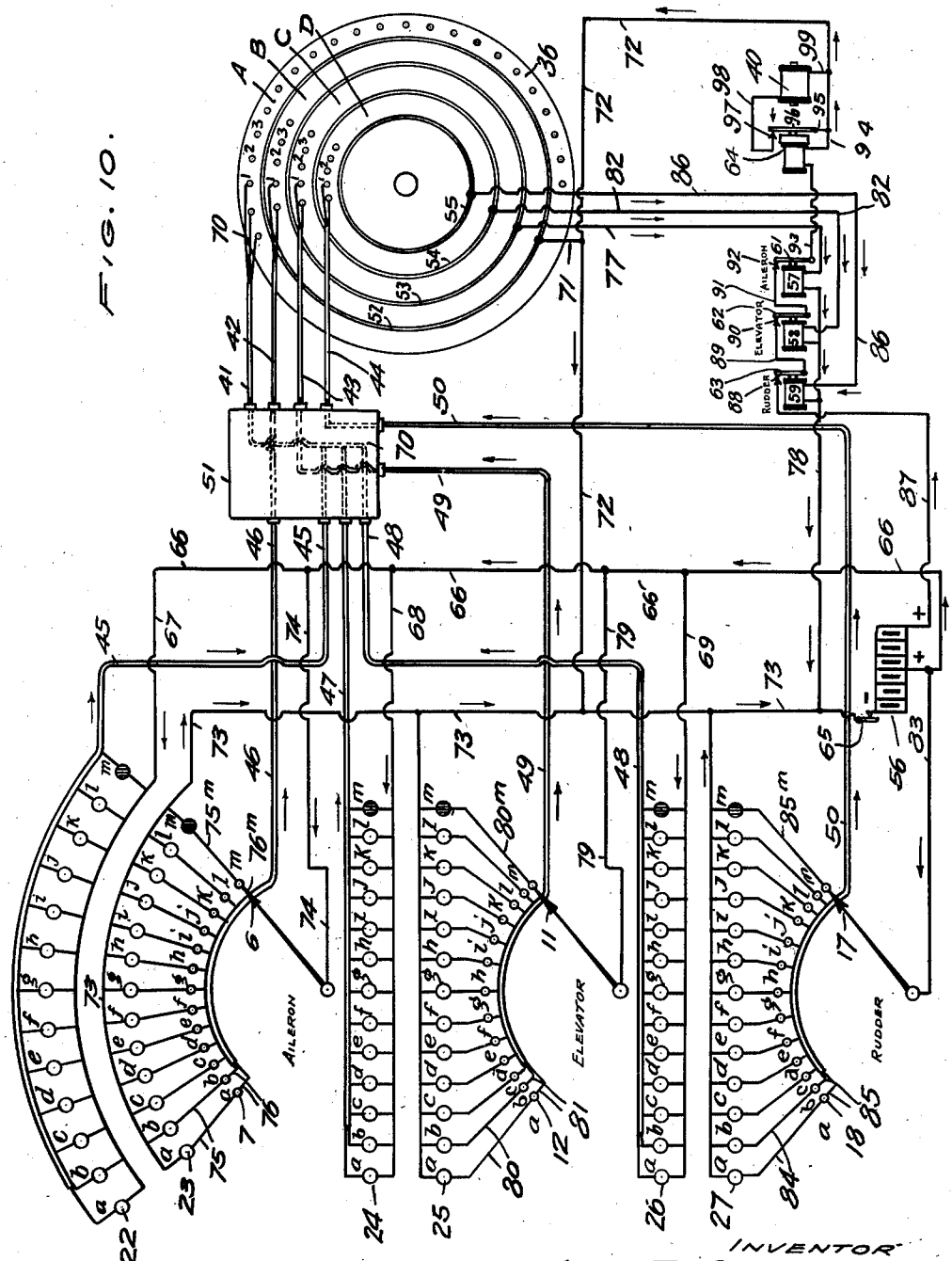

FIG. 10.

INVENTOR
ASA F. CONSTABLE
Francis H. Vanderwerken
BY Wade Koontz
ATTORNEYS

Patented Apr. 10, 1934 1,953,954

UNITED STATES PATENT OFFICE

1,953,954

REACTION APPARATUS

Asa F. Constable, Randolph Field, Tex.

Application April 26, 1932, Serial No. 607,585

14 Claims. (Cl. 35—12)

(Granted under the act of March 3, 1883, as amended April 30, 1928; 370 O. G. 757)

The invention described herein may be manufactured and used by or for the Government for governmental purposes, without the payment to me of any royalty thereon.

This invention relates to a testing apparatus to be used in detecting potential flying ability.

The apparatus is designed to present definite predetermined stimuli in series to the individual being tested. The response to the stimuli is made by the coordinate movement of the hands and feet of the reactor, operating a set of controls similar to those used in controlling an airplane. The correct response to a given set of stimuli activates the apparatus which automatically sets up the succeeding stimuli. The correct response again activates the apparatus and this continues until the whole series is completed. The individual being tested is scored by the time required to complete forty settings.

With serial reaction as the basic idea, the invention consists in the novel arrangement, construction, and combination of parts hereinafter described, and illustrated in the accompanying drawings, wherein:—

Figure 1 is a perspective view of the apparatus,

Figure 2 a vertical longitudinal section on line 2—2 of Fig. 1;

Figure 3 an enlarged fragmentary view, in perspective, of the base of the apparatus as viewed from the underside;

Figure 4 a detail sectional view of the control stick mounting;

Figure 5 a sectional view on line 5—5 of Fig. 4;

Figure 6 an enlarged sectional view of the automatic stimuli selector assembly;

Figure 7 a front view of the commutator disc of the stimuli selector assembly;

Figure 8 a section on line 8—8 of Fig. 7;

Figure 9 a detail view of a segment of the escapement gear, and

Figure 10 a schematic view of the electrical circuits.

The frame of the apparatus includes a raised platform or base 1 upon which is mounted an adjustable seat 2 and a set of airplane controls comprising the control stick 3 and rudder 4. As shown in Figs. 2 and 3, the controls are of the type commonly used in preliminary training airplanes. To the lower end of the aileron control portion 5 of the stick is attached a contact brush 6 which is adapted, during the lateral movement of the stick to engage successively each of the thirteen contact buttons 7*a*—*m* of the aileron commutator segment 8. Segment 8 is rigidly supported from the elevator control shaft 9 of the stick assembly and rocks back and forth with the shaft during the fore and aft movements of the stick. Rigidly secured to the elevator-control shaft 9, adjacent one end thereof and depending therefrom, is an elevator-control portion or arm 10, to the lower end of which is attached a contact brush 11. Brush 11 is arranged to engage successively, during the fore and aft movement of the stick, each of the contact buttons 12*a*—*m* of the elevator commutator segment 13, which segment is fixedly secured to the underside of the platform by the supporting brackets 14. To the lower extremity of the rudder-control shaft 15 is fastened a cross arm 16 at one end of which is mounted a contact brush 17 arranged to engage successively, during the operation of the rudder control, each of the thirteen contact buttons 18*a*—*m* of the rudder commutator segment 19 underlying the brush end of the cross arm. Segment 19 is supported on angle brackets 20 of the platform.

Extending upwardly from the base 1, forwardly of the controls, is a signal panel 21 provided on the front side with three double rows or banks of lights, thirteen lights (*a*—*m*) to the row, at about the level of the eyes of the individual being tested. The two rows of lights in the top bank are disposed in the arc of a circle while those of the bottom bank are horizontal. The middle bank has the rows extending vertically between the top and bottom lights. One row in each set of lights is composed of green light-units and the other row of white light-units. The green lights constitute the signal or stimulus lights and are operated automatically. The white lights are the response lights and are under the direct control of the reactor. Only one light in each row is illuminated at a time. In the top bank, the green stimulus lights 22*a*—*m* are in the upper row and the white response lights 23*a*—*m* are in the lower row. The lights of this bank are designated as the aileron lights and the illumination of the white response lights is controlled by the lateral motion of the control stick. The lights of the vertical bank are termed the elevator lights and are arranged with the green stimulus lights 24*a*—*m* to the right of the white response lights 25*a*—*m*. The response lights 25*a*—*m* are illuminated by the forward and backward motion of the control stick. The lights of the lower transverse or horizontal bank are termed the rudder lights and are arranged with the green stimulus lights 26*a*—*m* above the white response

lights 27*a*—*m*. The response lights 27*a*—*m* are operated by the motion of the rudder.

Mounted on the rear side of the signal panel is an automatic stimuli selector including a rotatable shaft 28 suitably journaled in fixed bearings 29 and 30 on the inside of a housing 31. The shaft projects at one end beyond the housing and fixed to the projecting end is a laterally extending insulated arm or brush-holder 32 carrying eight brushes 33*a*—*h*. The shaft is rotated through a gear train 34 actuated by a spring motor 35 for moving the brush holder 32 over a commutator disc 36 fixed to the shaft bearing 29, as shown in Figure 6. The rotation of the shaft is controlled by an escapement including an escapement gear 37 and a pawl 38. The escapement gear is provided with forty teeth 39 and the pawl 38 is moved by a twelve volt solenoid 40 to allow the escapement gear to move one tooth or nine degrees at a time. The solenoid is energized and releases the escapement only when the reactor has made the correct response to a given set or combination of signals, as hereinafter explained. The commutator disc 36 is of fiber material and has four circular rows A—B—C—D of forty contacts each, the contacts of each row being placed nine degrees apart and electrically connected through the 40-wire cables 41, 42, 43 and 44 to the 13-wire cables 45, 46, 47, 48, 49 and 50 of the aileron, elevator, and rudder lights assembles. The electrical connections are made at the junction box 51 so as to provide forty different settings or combinations of signal or stimulus lights.

Alternating with the rows A—B—C—D of commutator contacts are ground-wire rings 52, 53, 54 and 55 respectively connected with the negative side of a 12-volt battery 56; the rings 53, 54, and 55 being connected in series with the relays 57, 58 and 59, respectively. The movement of the commutator brush-holder 32 is synchronized with the movement of the escapement gear 37 so that at each release of the escapement the brushes 33 wired in pairs as shown at 60, move in a clockwise direction nine degrees over the face of the commutator disc or from one radial set of commutator contacts to another; stopping at each of the forty settings and at each stop bridging the electrical gap between the contact heads and the rings of the commutator. Row A of the commutator is so wired that each of its contacts represents a stimulus light in each of the aileron, elevator and rudder banks. The corresponding contacts in rows B, C and D are so wired relative to the white responsive lights of the aileron, elevator and rudder banks that when the proper position of the stick and rudder controls is reached, the relays 57, 58 and 59 are energized through their respective circuit. At each setting, therefore, the brushes 33 bridge a gap in each of the stimulus, aileron, elevator and rudder circuits. The relays 57, 58 and 59 operate the switches 61, 62 and 63, respectively, of the solenoid circuit, which circuit also includes the delay time relay 64. All circuits are controlled in the first instance by a control switch 65 on the signal panel 21.

In the operation of the device, the first stimulus is set up by the examiner closing the switch 65, but thereafter the individual being tested sets up each succeeding stimulus by his own work, penalizing himself for all errors by lengthening the time required for completion of the test. Assume the equipment at rest with the brush-holder 32 in position so that the contact buttons No. 1 in each row A, B, C and D of the commutator disc are connected, through the brushes 33, to their respective ground-wire rings. The closing of switch 65 completes the stimulus circuit from a six-volt connection with battery 56; through positive lead 66; branch leads 67, 68 and 69; to the green stimulus lights 22*a*—*m*, 24*a*—*m* and 26*a*—*m*, respectively; through the return wires of lights 22*m*—24*m* and 26*m* in the thirteen-wire cables 45, 47 and 48; to the junction box 51 where the return wires connect with the lead wire 70 of commutator contact No. A—1; through contact No. A—1 to brush 33*a*; through brush 33*b* to ground-wire ring 52; through leads 71 and 72 to negative lead 73 and thence to negative side of battery 56, thus illuminating the green lights 22*m*, 24*m* and 26*m*.

The aileron circuit includes the battery 56, 6-volt positive lead 66, branch lead 74, aileron control contact, brush 6, contact button 7*a*—*m*, each of which has two leads; one lead 75 including the lamp and being connected with the negative side of the battery 56 through the battery negative lead 73, while the other lead 76 is a unit of the 13-wire cable 46. The wires of cable 46 are connected at the junction box 51 in various combinations with the forty wires of cable 42 leading to the contacts of row B of the commutator disc. From contacts B, the circuit is completed through brushes 33*c* and 33*d* to ground-wire ring 53, lead 77, aileron relay 57, relay return lead 78 and battery return lead 73 to the negative side of battery 56. As the individual being tested moves the stick 3 from side to side, the aileron contact brush 6 is moved across the contacts 7*a*—*m* on the aileron commutator segment 8, alternately lighting the white response lights 23*a*—*m*. When the stick is in the extreme right position, lamp 23*a* is lighted and as the stick moves from right to left each response light 23*a*—*m* flashes on and off in turn as its corresponding button 7*a*—*m* is contacted. When the stick is moved to such a position that the aileron response light is directly below the lighted green aileron stimulus light, that is, when lamp 23*m* is lighted, the aileron circuit is closed and the aileron relay 57 energized, closing the solenoid switch 61.

The elevator circuit includes the battery 56, positive lead 66, brush lead 79, elevator contact brush 11, contact buttons 12*a*—*m*. From contact buttons 12*a*—*m*, the circuit is completed through the lamps 25*a*—*m* and the relay 58, respectively, as follows: through the lamps by way of leads 80 and lead 73 to the negative side of battery 56 and through the relay by way of leads 81 of cable 49 and the wires of cable 43 to commutator contacts of row C, thence through brushes 33*e* and 33*f* to ground-wire ring 54, lead 82, relay 58, relay return lead 78 and battery return lead 73 to negative side of battery 56. During the fore and aft movement of the control stick 3, the elevator contact brush 11 moves across the contacts 12*a*—*m* on the elevator commutator segment 13, alternately lighting the white response lights 25*a*—*m*. A forward motion of the stick operates the lower elevator response lights 25*h*—*m* and a backward motion operates the upper elevator response lights 25*a*—*f*. When the stick is properly positioned so that the response light 25*m*, directly opposite the lighted green elevator stimulus lamp 24*m* is operated, that is, when brush 11 engages contact 12*m*, the elevator circuit is closed and the

elevator relay 58 is energized, thus closing solenoid switch 62.

The rudder circuit includes the battery 56, positive lead 66, branch lead 83, rudder contact brush 17 and contact buttons 18*a*—*m*. The circuit through the lamps 27*a*—*m* is completed through each of the leads 84 and lead 73 to the negative side of battery 56. The circuit through the relay 59 is completed from contacts 18*a*—*m* through each of the contact leads 85 of cable 50 to junction box 51, through the wires of 40-wire cable 44 to the commutator disc contacts D, brushes 33*g* and 33*h* to ground-wire ring 55, lead 86, relay 59, relay return lead 78 and battery return lead 73 to negative side of battery. The rudder response lamps 27*a*—*m* are alternately lighted by kicking the rudder 4 to the right or left which moves the rudder contact brush 17 across the contacts 18*a*—*m* on the rudder contact segment 19. The kick of the rudder to the left illuminating those response lights 27*a*—*f* to the left and the kick to the right illuminating those response lights 27*h*—*m* to the right. When the rudder is so positioned that the correct response lamp is illuminated, that is, when rudder contact brush 17 engages contact 18*m*, the rudder circuit is closed lighting lamp 27*m* and energizing relay 59 which closes the solenoid switch 63.

The solenoid circuit includes the battery 56, 12-volt positive lead 87, switch contact 88, (switch arm 63, switch arm lead 89 to switch contact 90, switch arm 62, switch arm lead 91 to switch contact 92, switch arm 61, switch arm lead 93, retarded or time relay 64, adjustable in the circuit, relay lead 94 to negative lead 72, and also through shunt 95 to relay switch arm 96 to switch arm contact 97, contact lead 98 through solenoid 40 and solenoid lead 99 to relay lead 94 to negative lead 72, thence by way of negative lead 73 to the negative side of battery 56. When the aileron, elevator and rudder circuits of any particular setting or combination of stimuli are completed as previously described, the relays 57, 58 and 59 are energized and operate the relay switches 61, 62 and 63 to close the solenoid circuit. Upon the closing of the solenoid circuit, the solenoid 40 is actuated after four tenths of a second delay due to the retarded or delay time relay 64. The solenoid, when energized, disengages the pawl 38 from the escapement gear 37 and permits the latter, with its shaft 28, to rotate until the brushes 33*a*—*h* engage the next set of commutator contacts in rows A, B, C and D, illuminating new stimulus lights in banks 22*a*—*m*, 24*a*—*m* and 26*a*—*m*. As soon as the commutator brushes move out of contact with the first set of contacts of rows A, B, C and D, in passing from one setting to the next, the solenoid circuit is interrupted, deenergizing the solenoid and permitting the pawl 38 to be engaged, by spring or other elastic means, with the next succeeding tooth of the escapement gear at the time when the brushes 33*a*—*h* are properly positioned in their new setting relative to the contacts of the commutator disc 36. Concurrent movement of the stick and rudder, lighting those response lights corresponding to the stimulus lights of the new setting, is then required to again close the solenoid circuit and carry on to a new setting. This continues through forty settings, no two of which are alike.

The controls of the testing machine are similar to the controls used in actual operation of an airplane. The student, in taking the test, matches the white lights with the green lights. The lights are designed to simulate different flying problems and the correct matching of the lights is the solution of these problems. The scoring method consists in securing the time which the student uses in the test. His efficiency is determined by the time used in so doing. The retarding apparatus 64 is one which necessitates that the rudder and stick be held momentarily, approximately one-half second, in correct responsive positions. If this delay were not wired in the electrical circuit it would be a very simple matter for the student or reactor, after making correct response to the two stick lights 22*m* and 24*m*, to simply kick the rudder to the right or left without stopping so as to pass through the rudder response light and thereby trip the mechanism and set up a new signal. As has already been stated, the time delay relay or retarding apparatus makes it necessary for the reactor to hold his controls at the correct response position until a new signal is flashed. Before beginning the test, the student is given a written set of instructions. He is then given a certain amount of practice and oral instruction which familiarizes him with the proper manipulation of the controls after which the test begins. The examiner sets brush holder arm 32 at setting No. 1 on disc 36. Switch 65 is closed, setting up the first signal on the lighting panel 21, and simultaneously a stop watch is started. The closing of switch 65 completes an electrical circuit through the lamps 22*m*, 24*m*, and 26*m* in the manner thereinbefore described. The correct response to these green lights is shown by the position of arrows 6, 11 and 17 of Figure 10. This response closes the rudder, elevator, and aileron relay circuits, also time delay circuit and the solenoid circuit, which trips escapement gear 38 one tooth, thereby flashing on the next signal. This procedure is carried on as each setting is correctfully responded to by the student until forty settings have been completed. At the completion of the correct response to the fortieth setting, switch 65 is opened and the reading on the stop watch is the total time taken by student to do the test. It is recognized that in the actual operation of an airplane it frequently occurs that a single movement would place the airplane in the desired position. However, in this test machine it is always necessary to have the three lights correctly attuned before the succeeding signal will be given. It would be a matter of simple wiring to change this so that on occasion one control alone would suffice, but it is deemed best and a better test that the operator of the machine always have three lights for reaction.

New signals are automatically set up by the reactor as he makes the correct response to the preceding signals. The reactor establishes his own work speed and penalizes himself for all errors. The recording is simple, being a time element alone, but may be recorded graphically by use of any polygraph. The test may be scored as a work-limit test (total time required to complete a standard series) or it may be scored as a time-limit test (number of items completed in a specified time).

The advantages of the apparatus and test are: serial reaction is involved instead of single reaction; the automatic feature standardizes the stimuli and assures stimuli of constant intensity, eliminates errors of the operator and allows reliable score without highly trained operator, the ease of recording and scoring makes the test short enough that it may be repeated at intervals; and

the relation of the test to flying is close enough to discover potential flying ability.

It will be understood that the invention is not restricted to the precise details of construction and arrangement set forth in the preceding description but that various changes and alterations therein may be resorted to within the scope of the appended claims.

Having thus described the invention, what is claimed is:—

1. A reaction-testing apparatus including means for presenting a succession of predetermined stimuli to the individual being tested, means operated by the individual in response to given stimulus, and stimulus setting up means operatively connected to the individual operated means for actuation thereby upon the correct response to given stimulus to set up the succeeding stimulus.

2. A reaction-testing apparatus comprising means for stimulating including a series of stimulus-elements, reaction-indicating means including response-indicating elements to be respectively matched up with a given stimulus-element, and means controlled by said reaction-indicating means for actuating the stimulating means to present a different stimulus element each time correct response is made to a previously presented stimulus element.

3. A reaction-testing apparatus including a plurality of signalling members, means for successively displaying predetermined sets of signalling members, response-means to be actuated by the individual being tested in response to a given set of signalling members, and means controlled by said response-means for effecting operation of the signal displaying means upon correct response to the given signals.

4. A reaction-testing apparatus including means for presenting predetermined stimuli in series to the individual being tested, means for indicating the response of the individual to given stimuli, and means controlled by the response-indicating means for setting up succeeding stimuli whenever there is correct response to given stimuli, said setting up means including a retarding apparatus necessitating that the response-indicating means be held at the correct response position until new stimulus is set up.

5. A reaction-testing apparatus including stimulating means for presenting a plurality of stimulus-elements in successive sets to the individual being tested, reaction-indicating means including a response element for each stimulus-element, means operated by the coordinate movement of the hands and feet of the reactor for actuating the response elements, and means controlled by the said actuating means for automatically presenting the next set of stimulus-elements when there is a correct response to a previously presented set of stimulus-elements.

6. A reaction apparatus including a set of airplane controls comprising a control stock and rudder bar, a plurality of response-indicating elements operated successively by the fore and aft movement of the stick, a plurality of response-indicating elements operated successively by the lateral movement of the stick, a plurality of response-indicating elements operated successively by the movement of the rudder bar, a stimulus element for each response-indicating element, means for automatically and selectively operating the said stimulus elements, and means operated by the joint action of the controls for actuating the said stimulus operating means.

7. A reaction-testing apparatus including an electrical stimulus circuit including a stimuli-selector for presenting predetermined stimuli in series to the individual being tested, a plurality of electrical response circuits to be completed by the individual in response to predetermined stimuli, and means operating upon completion of the electrical response circuits to actuate the said stimuli-selector.

8. A reaction-testing apparatus including an electrical stimuli circuit including a stimuli selector for presenting predetermined stimuli in sets to the individual being tested, a set of airplane controls, electrical response-circuits to be completed in response to given stimuli by the movement of the controls and including aileron-elevators and rudder circuits, and means operated upon the completion of the correct response circuits for actuating the stimuli selector to set up other stimuli.

9. A reaction testing apparatus comprising an electrical stimuli-circuit including means for presenting predetermined stimuli in consecutive sets to the individual being tested, a set of airplane controls including aileron-elevator-rudder control members, electrical response circuits for each of said control members, and an electrical control circuit for the said stimuli-presenting means including a plurality of circuit closers electrically connected with the response circuits for completing the control circuit only when the correct response is made to given stimuli.

10. A reaction-testing apparatus including a plurality of electric lamps grouped in banks of two rows each, one row of each bank being composed of stimulus members and the other row of response members, a plurality of electrical stimulus circuits respectively including a stimulus unit in each bank, an electrical response circuit for each row of response members adapted to be selectively completed through the response members, a stimulus selector for completing the stimuli circuits successively, means operated by the reactor for closing the response circuits, means for operating the stimulus selector, and means controlled by the reactor-operated means for activating the stimulus selector to set up other stimuli when correct response is made to given stimulus.

11. In a reaction-testing apparatus, a stimuli selector apparatus comprising a fixed disc having a plurality of alternately arranged circular rows of relatively spaced electric switch contacts and ground rings, a rotatable shaft centered with respect to said rows of contacts and said rings, a switch arm fixed on said shaft a plurality of contact-engaging brushes fixedly mounted on said arm and electrically connected in pairs for bridging the electrical gap between the said contacts and rings, a plurality of electric signalling lamps electrically connected with the said contacts and rings to provide a series of separate and independent electric lamp circuits and means for imparting rotation to said shaft for moving the said brushes over the said contacts and rings.

12. A reaction-testing apparatus having, in combination, a raised platform, a set of airplane controls mounted thereon and including a rudder bar and a control stick having an aileron control portion and an elevated control portion, contact brushes carried respectively by said rudder bar and by each of the said aileron and elevator control portions of the stick, and a series of electrical contacts adjacent each contact

brush and in position to be successively engaged by the brush during the operation of the controls.

13. A reaction testing apparatus including a support, a shaft journaled in said support, a control stick mounted on said shaft for rotating same about its axis, said stick being pivotally mounted for movement laterally of the shaft about an axis transverse to the axis of the shaft, a commutator segment depending from said support and having a series of spaced electrical contacts, a brush carried by said shaft and engaging said contacts successively when the shaft is rocked about its axis, a similar segment fixed on said shaft to move therewith, and a brush carried by the said stick and engaging the contacts of the similar segment successively when the stick is moved laterally.

14. In a reaction-testing apparatus, a housing, having fixed bearings, a rotatable shaft journaled in said bearings, a disc fixed to one of the shaft bearings, and having a plurality of concentric rows of relatively spaced electrical contacts, and electrically grounded rings alternating with the said rows, a brush holder fixed on the shaft and extending transversely of the said disk, said brush holder having electrically connected pairs of contact brushes for establishing electrical connection between each ground ring and the contacts of the row associated therewith, means for rotating the shaft, and means for controlling the rotation of the shaft.

ASA F. CONSTABLE.