Nov. 10, 1931. L. B. LINDEMUTH 1,831,310

CENTRIFUGAL CASTING

Filed March 30, 1927

Fig. 1.

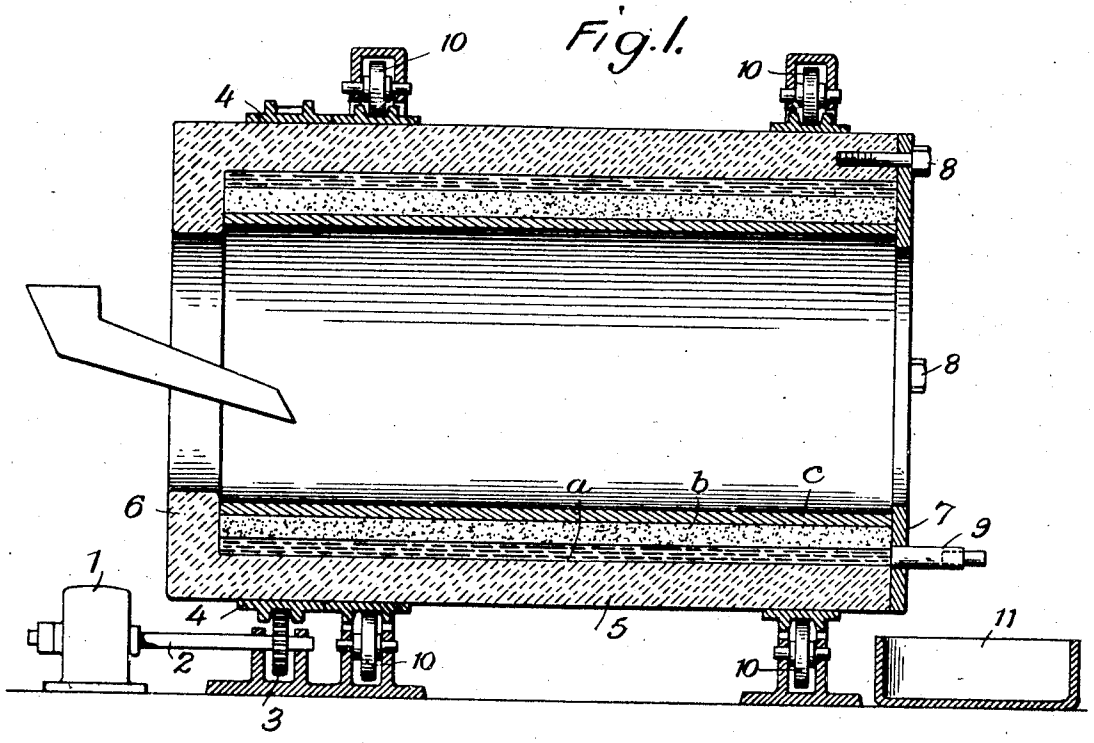

Fig. 2.

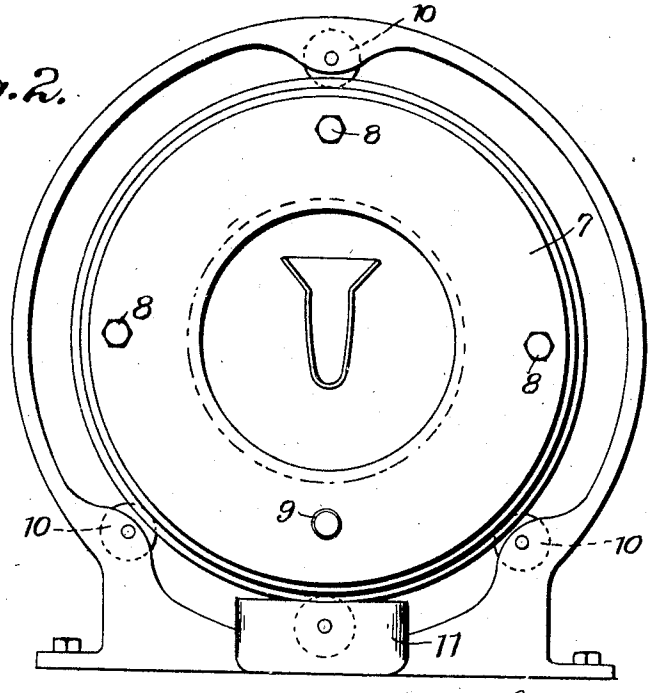

Inventor

Lewis B. Lindemuth

By Henry Orth Jr.

Attorney

Patented Nov. 10, 1931

1,831,310

UNITED STATES PATENT OFFICE

LEWIS B. LINDEMUTH, OF NEW YORK, N. Y.

CENTRIFUGAL CASTING

Application filed March 30, 1927. Serial No. 179,529.

My invention has relation to centrifugal castings and their manufacture, and has for its object to produce such a casting free from external or interior surface cracks, or both, with smooth surfaces free from inclusions and oxidation.

With centrifugal castings, especially of ingots of special metals the losses due to inclusions and surface cracks are high. I obviate these by making a smooth ingot, free of inclusions, that can at once be cut into billets for the finishing rolls.

The inner surface of centrifugally cast ingots is customarily rough, due to impurities from the metal, oxidation and other sources. These impurities have been driven to the inner surface by reason of being lighter than the metal of the casting, and by the centrifugal force during the casting operation.

Such inclusions, for example with steel, may be fused fire brick, silica, alumina, silicates and oxides of iron, silicates and oxides of manganese, and other substances incident to the manufacturing or smelting operation, a remelting operation, a metal finishing operation, or parts of the containers or linings used in handling the molten metal.

My invention is not confined to the centrifugal casting of ferrous metals, but is applicable to any other metal or alloy where smooth castings are the desideratum.

Centrifugal castings having smooth interiors require little or no machining or grinding of their interior surfaces before rolling to final shape.

When such castings are to be used directly without rolling as pipes, bearings, bushings and the like, they require not so deep a finishing or truing cut thereby saving both material and labor.

Pipes so made have a smoother interior, offering less resistance to fluid flow.

My invention is practiced as follows:

The centrifugal mold is first set in rotation and I place therein a temporary material, metal or alloy, heavier than the useful metal of the casting to line the mold. Such heavier material, metal or alloy, necessarily melting at a lower temperature than the useful metal or its pouring temperature, and not vaporizing at such temperature.

The heavy metal may, for example, be lead or a lead alloy, and the useful metal a steel.

The heavy material, metal or alloy, may be charged cold, but I prefer to charge it molten. When charged cold the heat of the useful metal (steel for example) will melt the substance or substances that are to form the mold lining. Molten lead may be poured into the rotating mold either first, or simultaneously with the molten iron or steel. This heavy metal under centrifugal action, whether introduced first or simultaneously or last, covers the interior of the rapidly rotating mold, and finds its way to and against the inner surface of the rotating mold by reason of its greater weight and the centrifugal force.

When operating with the heavier metal in a molten state the useful metal, a steel, brass or bronze previously melted is poured either after or simultaneously with the heavy metal. The casting or ingot is then allowed to set or freeze while the rotation is maintained.

I remove the ingot or casting from the mold in the following manner: While the casting is still hot centrifugal motion is stopped and the heavy molten material or metal still liquid from the heat of the useful casting is tapped off, after which the casting is removed, or the casting is allowed to cool and shrink and the composite casting of metal and mold-lining material is then removed and the heavier lining material or metal subsequently removed for re-use, if desired. Conveniently the heavy metal or material is melted off.

The quantity of temporary exterior heavy metal coating, as lead or lead alloy, is usually small, about five percent by volume of the useful metal, steel, bronze &c. However, where ingots are not in question and thin castings are made, the heavy mold lining may reach as much as fifty percent of the metal of the casting.

I do not limit my invention to the use of any particular quantity of heavy mold lining metal or material, as the desideratum is to fully cover the interior surface of the

mold and a larger or smaller quantity will do no harm.

In lieu of a metal I may use any other meltable heavy substance satisfying the conditions under which a heavy metal or alloy is used, for example, a heavy slag, such as a slag containing about fifty percent of barium, which may be tapped from the centrifugal mold before drawing the casting, or it may be drawn adhering to the casting when the latter has cooled sufficiently.

The fluid heavy mold lining retards the chilling of the casting and prevents in a great degree or entirely the formation of shrinkage cracks on the exterior surface of the castings, especially of thick castings, such as ingots.

This lining also acts, so to say, as a lubricant between the mold and useful metal casting during its contraction and cooling.

In conjunction with, or independently of the above described procedure I also smooth the interior of the centrifugal casting, and use in the interior of the casting a protective covering lighter than the metal of the casting proper, which covering may or may not be wholly or partly permanent.

Such internal protecting covering may be a slag-like substance or a metal. If a slag, I prefer an acid slag composed of sodium calcium and lead silicates, producing a coating resembling glass.

Inasmuch as the specific gravity of the inclusions average, with ferrous metals, a specific gravity of three, such a slag or glass is made up to have a gravity of say 3.50 to 4.00 and its quantity should be about 10% to 20% of the thickness of the useful metal being cast.

Such a slag may be formed directly in the casting in the mold by introducing the slag forming materials, which become fluid from the heat in the casting metal, or the slag may be first melted and then poured into the mold.

When there is no heavy molten mold lining used it is advantageous to first pour into the mold the molten slag or the slag forming materials and then pour into the mold the metal. This metal then passing through the slag and seeking the inner surface of the mold displaces the slag to the interior of the casting. The slag carries with it the impurities in the metal.

After the casting has cooled and shrunken it is removed from the mold with the covering of the inner surface of the casting adhering to it.

In some cases it is desirable to remove it, as with ingots, in others it is desirable to leave this covering as an internal coating of the casting, adhering to it, as with pipes. In the latter case enamels may be used as the slag.

In the former case, i. e., with ingots, it is preferably a glass, and this I remove in any manner.

When a cylinder ingot having a slag lining cover is cut longitudinally into billets, the slag is nearly all removed during this sub-dividing operation.

I have found it convenient after drawing the casting with its adhering internal slag cover coating from the mold and still containing some of the casting heat to remove the internal slag coat by cracking it off with a spray of water, either as such or in the form of steam.

Such an internal cover of slag prevents oxidation of the internal surface of the casting, carries the inclusions of the casting metal, and leaves the surface of the casting bright, clean and smooth.

When the casting is cut into billets and the billets re-heated, they are ready for the finishing rolls.

In lieu of an internal cover coating of slag I may use a metal, preferably but not necessarily lighter than the metal of the casting.

For example, after the casting has set, and while still hot I may introduce lead or lead alloy, cold or molten, which protects the interior of the casting from undue oxidation and floats the inclusions toward the interior surface of the mold. After the casting is drawn from the mold, this coating is melted off for re-use.

Or I may use aluminum, which may be charged cold or molten. When charged cold, the heat of the mold and the reaction of the aluminum with the oxide coating on the interior of the casting (which reaction is strongly exothermic) melts the aluminum and the adjacent surface of the still hot casting, carrying the inclusions to the center of the aluminum protecting coat, as well as the slag that is formed during reaction with the oxide and inclusions.

The aluminum may also be introduced into the casting molten.

The covering materials may or may not have some solvent action on the metal of the casting, depending upon the relative composition of casting and covering material. All prevent oxidation of the casting metal during cooling.

Brass or bronze may also be used as a protective coating cover for the casting.

These metal protecting coatings for the interior of the centrifugal casting may be wholly or partly removed.

They usually are softer than the metal of the casting and may be turned off in a lathe with less labor and expense, and a light cut will usually remove that inner portion of the lining coat of the casting containing the inclusions, slag &c., so that the ingot or casting may still have some of the coating metal adhering to it, in which condition it may be rolled to enlarge its diameter while reduc-

ing its thickness, or drawn to form a composite or clad metal article.

When the lighter internal coating is completely taken off the amount removed from the metal of the casting, as of a ferrous metal, need be small, as its surface is clean and free from cracks and inclusions, so that only a finishing cut is necessary.

Loose molders sand may be used as a cover, where prevention of too great oxidation of the inner surface of the mold is the aim.

As illustrative of the invention the following diagrammatic drawings are appended, in which like parts are similarly designated.

Figure 1 is a diagrammatic cross section of an ingot mold with the ingot therein, and

Fig. 2 is a front view of the same.

In these drawings, 1 is an electric motor whose shaft 2 directly or indirectly drives a gear 3 that meshes with a gear ring 4 on the revoluble ingot mold 5 provided with a flange 6 at on end, which flange may be integral, and at its other end with a removable ring 7 held in place by bolts 8. The ring 7 is provided with a molten metal discharge pipe 9 plugged with clay or otherwise stopped. The mold is mounted and rotates on the usual supporting rollers 10.

Beneath the pipe 9 is placed a receptacle 11 for the molten lead or slag.

The mold in this particular instance is shown to contain the mold lining *a*, the useful metal or ingot metal *b* and the internal coating *c*.

The mold is set in rotation by the motor, and the materials are supplied thereto in any order, as previously described.

After the casting *b* has set, the plug is withdrawn from the pipe 9 and the mold lining is permitted to run into the receptacle 11, after which the ring 7 is taken off and the casting drawn from the mold.

I prefer to use some sort of positive draw-off device for the mold lining, as the pipe 9, rather than allow the molten lining to spill out between the ring and mold end as the ring 7 is being removed.

I claim—

1. The art of making centrifugal castings, which comprises providing a mold during its rotation with casting metal and a molten temporary lining heavier than the casting metal to prevent the casting metal from contacting with the mold, stopping the mold and removing the temporary lining and casting.

2. The art of making centrifugal castings, which comprises providing a mold during its rotation with casting metal and a molten temporary lining heavier than the casting metal to prevent the casting metal from contacting with the mold, allowing the lining to solidify on the casting, stopping the mold and thereafter simultaneously removing the temporary lining and casting.

3. The art of making centrifugal castings, which comprises lining a centrifugal mold during its rotation with a molten temporary lining heavier than the metal of the casting, pouring the casting, allowing the lining and casting to harden and removing them as a compound casting, said lining forming an exterior temporary protecting coating for the casting.

4. The art of making centrifugal castings, which comprises providing a mold during its rotation with casting metal and a molten temporary lining of metal heavier than the casting metal to prevent the casting metal from contacting with the mold and to give to the casting a smooth surface free from shrinkage cracks during cooling, stopping the mold and removing the temporary lining and casting.

5. The art of making centrifugal castings, which comprises lining a centrifugal mold during its rotation with a molten temporary lining of metal heavier than the metal of the casting, pouring the casting, allowing the lining and casting to harden and removing them as a compound casting.

6. The art of making centrifugal castings, which comprises lining a centrifugal mold during its rotation with a molten temporary lining heavier than the metal of the casting, pouring the casting, allowing the temporary lining and casting to harden, removing them as a compound casting, and removing the mold lining from the exterior of the casting.

7. The art of making centrifugal castings, which comprises providing a mold during its rotation with a temporary molten lead lining and the metal to be cast, stopping the mold and removing lead and casting.

8. The art of making centrifugal castings, which comprises providing a mold during its rotation with a molten lead lining and the metal to be cast, the lead preventing the metal to be cast from contacting with the mold and producing a smooth exterior surface to the resulting casting substantially free from shrinkage cracks stopping the mold and thereafter simultaneously removing lead and casting.

9. The art of making centrifugal castings, which comprises providing a mold during its rotation with a molten lead lining and the metal to be cast, stopping the mold and thereafter simultaneously removing the lead and casting, and removing the lead from the casting before further use of the casting.

10. The art of making centrifugal castings, which comprises providing a mold during its rotation with a molten lead lining and the metal to be cast, stopping the mold and thereafter simultaneously removing lead and casting, and melting the lead from the casting.

11. The art of making centrifugal castings, which comprises providing a centrifugal mold during its rotation with casting metal, a molten mold lining and a temporary cover for the interior of the casting centrifugally

distributed over the inner surface of the casting.

12. The art of making centrifugal castings, which comprises providing a centrifugal mold while in a state of rotation with a heavy molten lining, a casting metal and a molten cover coating for the interior surface of the casting metal which is heavier than the inclusions in the casting metal.

13. The art of making centrifugal castings, which comprises providing a centrifugal mold while in a state of rotation with a heavy molten lining, a casting metal and a molten cover coating for the interior surface of the casting metal which is heavier than the inclusions in the casting metal, removing the composite casting from the mold, removing the mold lining from the casting and removing at least a portion of the cover coating.

14. The art of making centrifugal castings, which comprises providing a mold while in a state of rotation with casting metal and a temporary protecting coating or layer for the inner surface of the casting.

15. The art of making centrifugal castings, which comprises providing a mold while in a state of rotation with casting metal and a molten temporary protecting coating or layer for the inner surface of the casting and removing the coating before use of the casting.

16. The art of making centrifugal castings, which comprises providing a mold while in a state of rotation with casting metal and a temporary protecting coating or layer for the interior surface of the casting that is lighter than the casting metal and removing the coating containing the inclusions.

17. The art of making centrifugal castings, which comprises providing a mold while in a state of rotation with casting metal and a temporary molten protecting coating or layer for the interior surface of the casting that is lighter than the casting metal and removing the coating containing the inclusions.

18. The art of making centrifugal castings, which comprises providing a mold while in a state of rotation with casting metal and a protecting coating or layer for the inner surface of the casting and removing at least a part of this internal coating from the casting.

19. The art of making centrifugal castings, which comprises providing a mold while in a state of rotation with a temporary slag and casting metal and removing the slag containing the inclusions.

20. The art of making centrifugal castings, which comprises providing a mold while in a state of rotation with a temporary slag of less specific gravity than the metal but of greater specific gravity than the inclusions, and with casting metal and removing the slag containing the inclusions.

21. The art of making centrifugal castings, which comprises providing a mold while in a state of rotation with a temporary lead slag and casting metal and removing the slag containing the inclusions.

22. The art of making centrifugal castings, which comprises providing a mold while in a state of rotation with an acid lead slag and casting metal and removing the slag containing the inclusions.

23. The art of making centrifugal castings, which comprises providing a mold while in a state of rotation with liquid metal and a slag of less gravity than the metal but of greater gravity than the metal inclusions, drawing the casting and removing the internal coating.

24. The art of making centrifugal castings, which comprises providing a mold while in a state of rotation with liquid metal and a slag of less gravity than the metal but of greater gravity than the metal inclusions, drawing the casting and removing the internal coating by water.

25. The art of making centrifugal castings, which comprises providing a mold while in a state of rotation with liquid metal and a slag of less gravity than the metal but of greater gravity than the metal inclusions, drawing the casting and removing the internal coating by water in the form of steam.

26. The step in the making of smooth centrifugal castings, which comprises pouring molten metal into a rotating mold, and thereafter pouring therein a metal lighter than the metal of the casting but heavier than the inclusions of the metal being cast.

27. The step in the making of smooth centrifugal castings, which comprises pouring molten metal into a rotating mold, and thereafter pouring therein a metal lighter than the metal of the casting but heavier than the inclusions of the metal being cast, and removing at least a part of the lighter metal after the casting has cooled.

28. The art of making centrifugal castings, which comprises providing the mold while in a state of rotation with a slag in the nature of a lead glass and casting metal, said glass protecting the internal surface of the casting against oxidation and carrying the inclusions of the casting metal, and is readily removable.

In testimony that I claim the foregoing as my invention I have signed my name hereto.

LEWIS B. LINDEMUTH.