Office de la Propriété Intellectuelle du Canada
Un organisme d'Industrie Canada

Canadian Intellectual Property Office
An agency of Industry Canada

CA 2344888 C 2005/06/21

(11)(21) 2 344 888

(12) BREVET CANADIEN
CANADIAN PATENT

(13) C

(86) Date de dépôt PCT/PCT Filing Date: 1999/09/22
(87) Date publication PCT/PCT Publication Date: 2000/04/20
(45) Date de délivrance/Issue Date: 2005/06/21
(85) Entrée phase nationale/National Entry: 2001/03/20
(86) N° demande PCT/PCT Application No.: IB 1999/001568
(87) N° publication PCT/PCT Publication No.: 2000/021809
(30) Priorité/Priority: 1998/10/09 (98/9243) ZA

(51) Cl.Int.^{7}/Int.Cl.^{7} B60S 1/38

(72) Inventeur/Inventor:
SWANEPOEL, ADRIAAN RETIEF, ZA

(73) Propriétaire/Owner:
TRICO PRODUCTS CORPORATION, US

(74) Agent: SMART & BIGGAR

(54) Titre : UN RENFORT POUR UN ESSUIE-GLACE SIMPLE DE FAISCEAU
(54) Title: A BACKBONE FOR A SINGLE BEAM WINDSCREEN WIPER

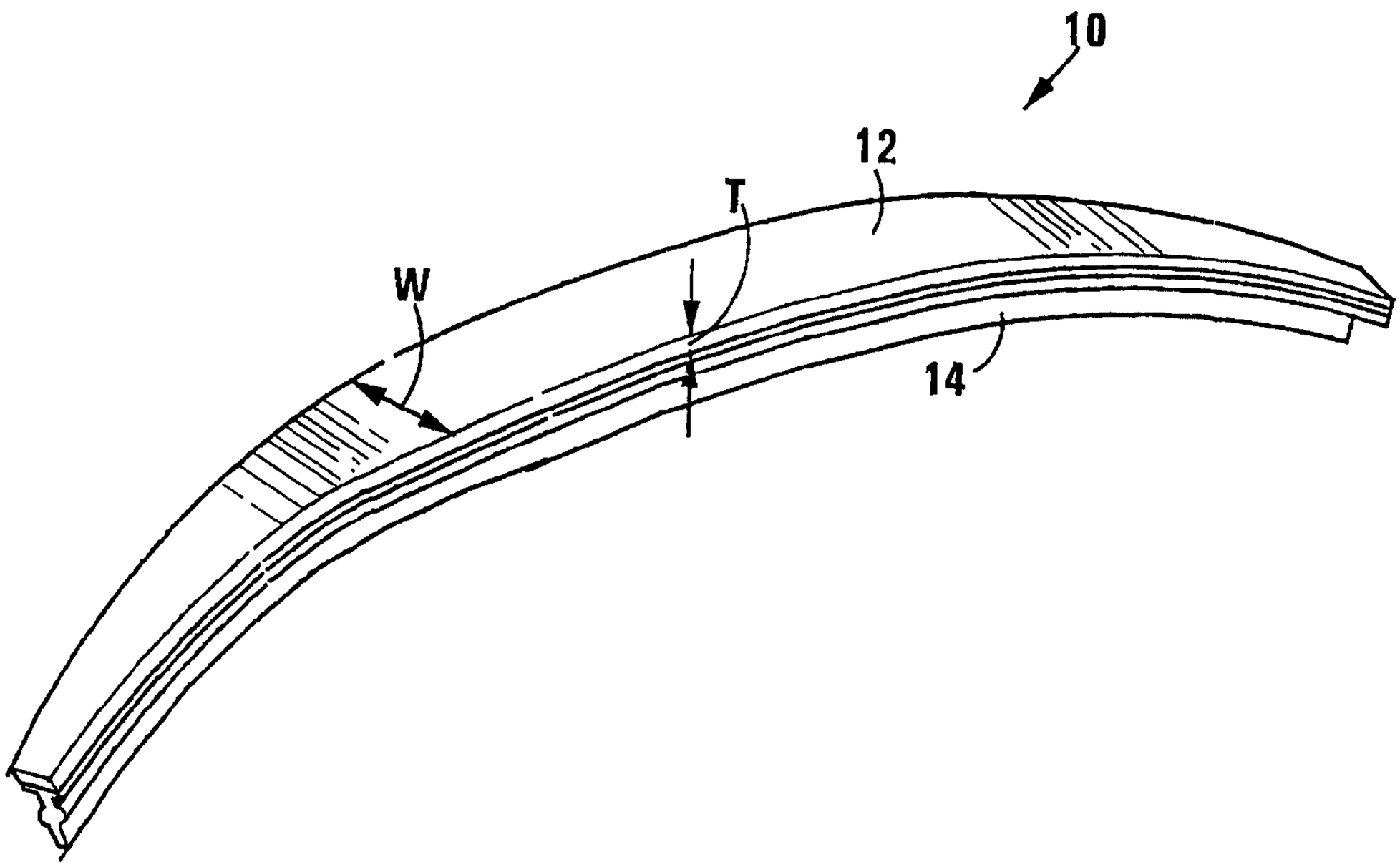

(57) Abrégé/Abstract:
The present invention relates to a single beam windscreen wiper which has a curved backbone and which may have a varying width and/or thickness. The invention provides dimensional ranges for a wiper blade beam for optimal wiper performance. The windscreen wiper includes an elongate curved backbone which is of a resiliently flexible material having a Young's modulus between 50 to 350 GPa. The backbone having a substantially spacially consolidated cross sectional profile at substantially all points along its length characterized therein at the magnitude of the width that is substantially the widest point along the backbone is at most (-8.889*10^{-5}* E = 0.05378)* L -5.25, where L is the total length of the backbone expressed in milimeters and E is the Young's modulus of the backbone material expressed in GPa.

ABSTRACT

The present invention relates to a single beam windscreen wiper which has a curved backbone and which may have a varying width and/or thickness. The invention provides dimensional ranges for a wiper blade beam for optimal wiper performance. The windscreen wiper includes an elongate curved backbone which is of a resiliently flexible material having a Young's modulus between 50 to 350 GPa. The backbone having a substantially spacially consolidated cross sectional profile at substantially all points along its length characterized therein at the magnitude of the width that is substantially the widest point along the backbone is at most $(-8.889*10^{-5}* E = 0.05378)* L -5.25$, where L is the total length of the backbone expressed in milimeters and E is the Young's modulus of the backbone material expressed in GPa.

76263-5

A BACKBONE FOR A SINGLE BEAM WINDSCREEN WIPER

This invention relates to a windscreen wiper, which is also known as a windshield wiper.

The invention relates in particular to a single beam windscreen wiper which has a curved backbone and which may have a varying width and/or thickness. It will be appreciated by those skilled in the art that the backbone may be in the form of a beam that is curved in a plane or may have a compound curvature such as in EP-A-0 528 643 and DE-A-196 51229. The beam will have width and thickness dimensions. The beam will also have a radius of curvature at each point along its length.

There are many advantages associated with single beam windscreen wipers. Notably, such single beam wipers are of simple construction when compared to traditional tournament-style windscreen wipers, and it is thus possible to produce a single beam windscreen wiper having a low profile with increased aerodynamic efficiency. A single beam windscreen wiper generates down force which forces the wiper blade on to the windscreen by the resilient resistance to bending of the backbone. The performance of the beam is thus largely determined by the structural characteristics of the backbone.

However, there are a number of divergent factors which need to be taken into consideration in designing a backbone for such a wiper. These factors include not only the structural mechanics of the beam, but also the force distribution on surfaces with continuously varying curvatures, tip judder resistance, wind lift characteristics, economical production, integration with

wiper arms, avoidance of stick-slip dynamics, etc. The dynamic performance of a single beam windscreen wiper is thus extremely complex and currently defies accurate mathematical analysis or simulation. As a result, successful implementation of the concept of a single beam wiper blade has been frustrated by the unpredictability of dynamic performance of such wipers and the elusiveness of a design which satisfies all the abovementioned factors.

The applicant has conducted substantial analysis and experimentation and believes that he has found a relationship between the width, the beam material's Young's modulus and the total length of the beam and the thickness, the beam material's Young's modulus and the total length, which provides a windscreen wiper that operates in an improved manner.

In this specification, the term "spatially consolidated" is to be understood, unless the context clearly indicates otherwise, to mean that the actual perimeters of a cross-section coincides with the shortest possible perimeter encapsulating that cross-section.

According to a first aspect of the invention there is provided a windscreen wiper which includes

an elongate curved backbone which is of a resiliently flexible material having a Young's modulus of between 50 to 350 GPa, the backbone having a substantially spatially consolidated cross-sectional profile at substantially all points along its length, in which the magnitude of the width at substantially the widest point along the backbone, W_m (expressed in millimetres) is at most $(-8.889.10^{-5} * E + 0.05378) * L - 5.25$, where L is the total length of the backbone expressed in millimetres and E is the Young's modulus of the backbone material expressed in GPa.

Further according to this aspect, there is provided a windscreen wiper which includes

an elongate curved backbone which is of a resiliently flexible material having a Young's modulus of between 50 to 350 GPa, the backbone having a substantially spatially consolidated cross-sectional profile at substantially all points along its length, in which the ratio of the magnitude of the width at substantially the widest point along the backbone, to the total length L of the backbone, R_w is at most $(-8.889.10^{-5} * E + 0.05378) - 5.25/L$, where L is the total length of the backbone expressed in millimetres and E is the Young's modulus of the backbone material expressed in GPa.

According to a second aspect of the invention there is provided a windscreen wiper which includes

an elongate curved backbone which is of a resiliently flexible material having a Young's modulus of between 50 to 350 GPa, the backbone having a substantially spatially consolidated cross-sectional profile at substantially all points along its length,

in which the magnitude of the thickness at substantially the thickest point along the backbone, T_m (expressed in millimetres) is at most 0.0007 * L - 0.0027407 * E + 1.37814, where L is the total length of the backbone expressed in millimetres and E is the Young's modulus of the backbone material expressed in GPa.

Further according to this aspect, there is provided a windscreen wiper which includes

an elongate curved backbone which is of a resiliently flexible material having a Young's modulus of between 50 to 350 GPa, the backbone having a substantially spatially consolidated cross-sectional profile at substantially all points along its length, in which the ratio of the magnitude of the thickness at substantially the thickest point along the backbone to the total length L of the backbone, R_t is at most 0.0007 - (0.0027407 *E - 1.37814)/L, where L is the total length of the backbone expressed in millimetres and E is the Young's modulus of the backbone material expressed in GPa.

The material of the backbone may be a composite material. In this case, the Young's modulus will be that of the composite material.

The total length of the backbone may be between about 300mm to 1200mm.

The backbone may have a varying width and or thickness, along its length. The backbone may have a free form curvature in a plane or may have a compound curvature (that is, curved in two planes).

The invention is now described, by way of example with reference to the accompanying drawings, in which:

Figure 1 shows a schematic perspective view from above of a windscreen wiper in accordance with the invention;

Figure 2 shows a side view of the wiper of Figure 1 in an unloaded free-form condition;

Figure 3 shows a graph indicating the variation of width of the backbone of the windscreen wiper shown in Figures 1 and 2;

Figure 4 shows a graph indicating the variation of thickness of the backbone of the windscreen wiper shown in Figures 1 and 2; and

Figure 5 shows a graph indicating the free-form co-ordinates of the centre line of the backbone of the windscreen wiper shown in Figures 1 and 2.

In the drawings, a windscreen wiper in accordance with the invention is generally designated by the reference numeral 10. The windscreen wiper 10 includes a backbone 12 which is in the form of a beam and a rubber wiper blade 14. The beam is made from spring steel having a Young's modulus of 200 GPa. The length of the beam is 600mm. The beam has a rectangular cross-sectional profile at all points along its length. Thus, the beam has a width dimension W and a thickness dimension T as shown in Figure 1. The beam tapers both in width and thickness from its centre toward its free ends or tips as shown in Figure 3 and Figure 4 respectively. Figure 3 illustrates the beam width (in millimetres) at various positions along the length of the beam, which is also measured in millimetres. Figure 4 illustrates the thickness of the beam (in millimetres) at various positions along the length of the beam which is also measured in millimetres.

The beam is curved longitudinally, in a plane, with a predetermined radius of curvature R at every point along its length as shown in Figure 2. Figure 5 shows the beam centre line co-ordinates relative to the position along the length of the beam (in millimetres).

With the given formulas, it can be determined if the wiper, as described in the drawings conforms to the invention. The width of the beam 12 at its widest point along the beam 12, W_m (expressed in millimetres) is 15.4 as shown in Figure 3. According to the first aspect of the invention, the magnitude of the width at the widest point along the beam 12, W_m (expressed in millimetres), where L is 600 mm and E is 200 GPa, should be less than $(-8.889.10^{-5} * E + 0.05378) * L - 5.25 = (-8.889.10^{-5} * 200 + 0.05378) * 600 - 5.25 = 16,35$ mm. The width W_m of the wiper therefore falls within the scope of the invention.

The thickness of the beam 12 at the thickest point along the beam 12, T_m (expressed in millimetres) is 1.2 mm as shown in Figure 4. According to the second aspect of the invention the magnitude of the thickness at the thickest point along the beam 12, T_m (expressed in millimetres), where L is 600 mm and E is 200 GPa, should be less than $0.0007 * L - 0.0027407 * E + 1.37814 = 0.0007 * 600 - 0.0027407 * 200 + 1.37814 = 1,25$ mm. The thickness T_m of the wiper therefore also falls with the scope of the invention.

CLAIMS:

1. A windscreen wiper (10) which includes

an elongate curved backbone (12) which is of a resiliently flexible material having a Young's modulus of between 50 GPa to 350 GPa, the backbone having a substantially spatially consolidated cross-sectional profile at substantially all points along its length,

characterised therein that the magnitude of the width at substantially the widest point along the backbone, W_m (expressed in millimetres) is at most $(-8.889*10^{-5} * E + 0.05378) * L - 5.25$, where L is the total length of the backbone expressed in millimetres and E is the Young's modulus of the backbone material expressed in GPa.

2. A windscreen wiper (10) as claimed in claim 1, in which

the magnitude of the thickness at substantially the thickest point along the backbone, T_m (expressed in millimetres) is at most $0.0007 * L - 0{,}0027407 * E + 1.37814$, where L is the total length of the backbone expressed in millimetres.

3. A windscreen wiper (10) which includes

an elongate curved backbone (12) which is of a resiliently flexible material having a Young's modules of between 50 GPa to 350 GPa, the backbone having a substantially spatially consolidated cross-sectional profile at substantially all points along its length,

characterised therein that the magnitude of the thickness at substantially the thickest point along the backbone, T_m (expressed in millimetres) is at most

0.0007 * L - 0,0027407 * E + 1.37814, where L is the total length of the backbone expressed in millimetres and E is the Young's modules of the backbone material expressed in GPa.

4. The windscreen wiper as claimed in claim 1, characterised therein that the material of the backbone is a composite material.

5. The windscreen wiper as claimed in claim 3, characterised therein that the material of the backbone is a composite material.

6. The windscreen wiper as claimed in claim 1, characterised therein that the backbone has a varying width and thickness along its length.

7. The windscreen wiper as claimed in claim 1, characterised therein that the backbone has a free form curvature in a plane.

8. The windscreen wiper as claimed in claim 1, characterised therein that the backbone has a compound curvature.

9. The windscreen wiper as claimed in claim 3, characterised therein that the backbone has a varying width and thickness along its length.

10. The windscreen wiper as claimed in claim 3, characterised therein that the backbone has a free form curvature in a plane.

11. The windscreen wiper as claimed in claim 3, characterised therein that the backbone has a compound curvature.

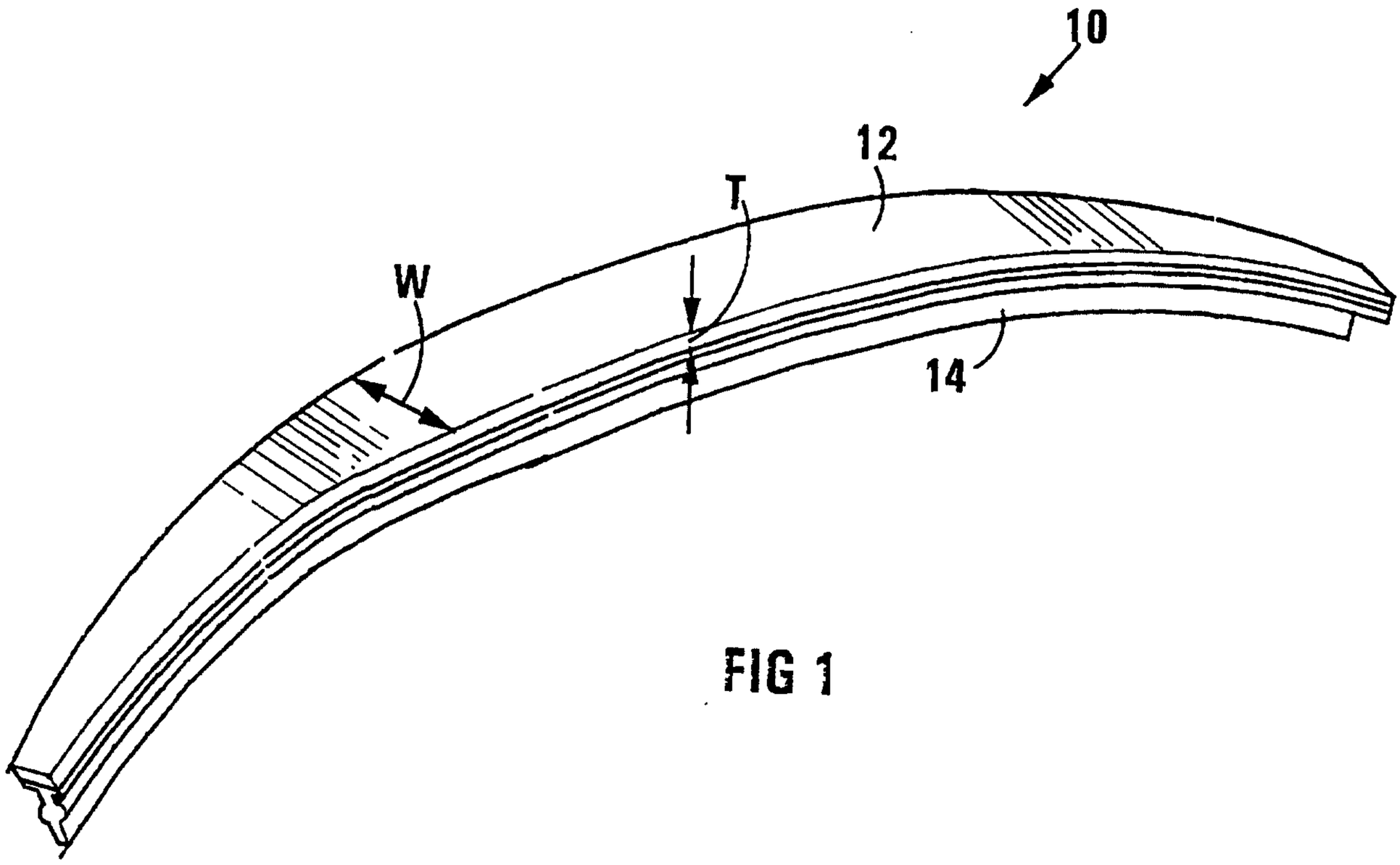

FIG 1

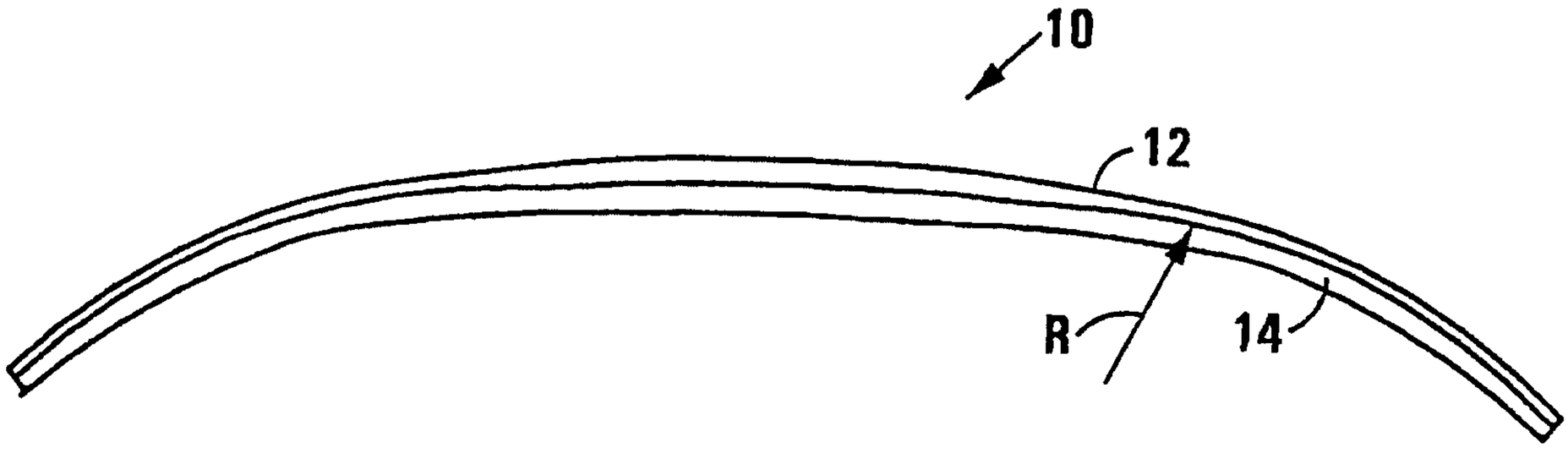

FIG 2

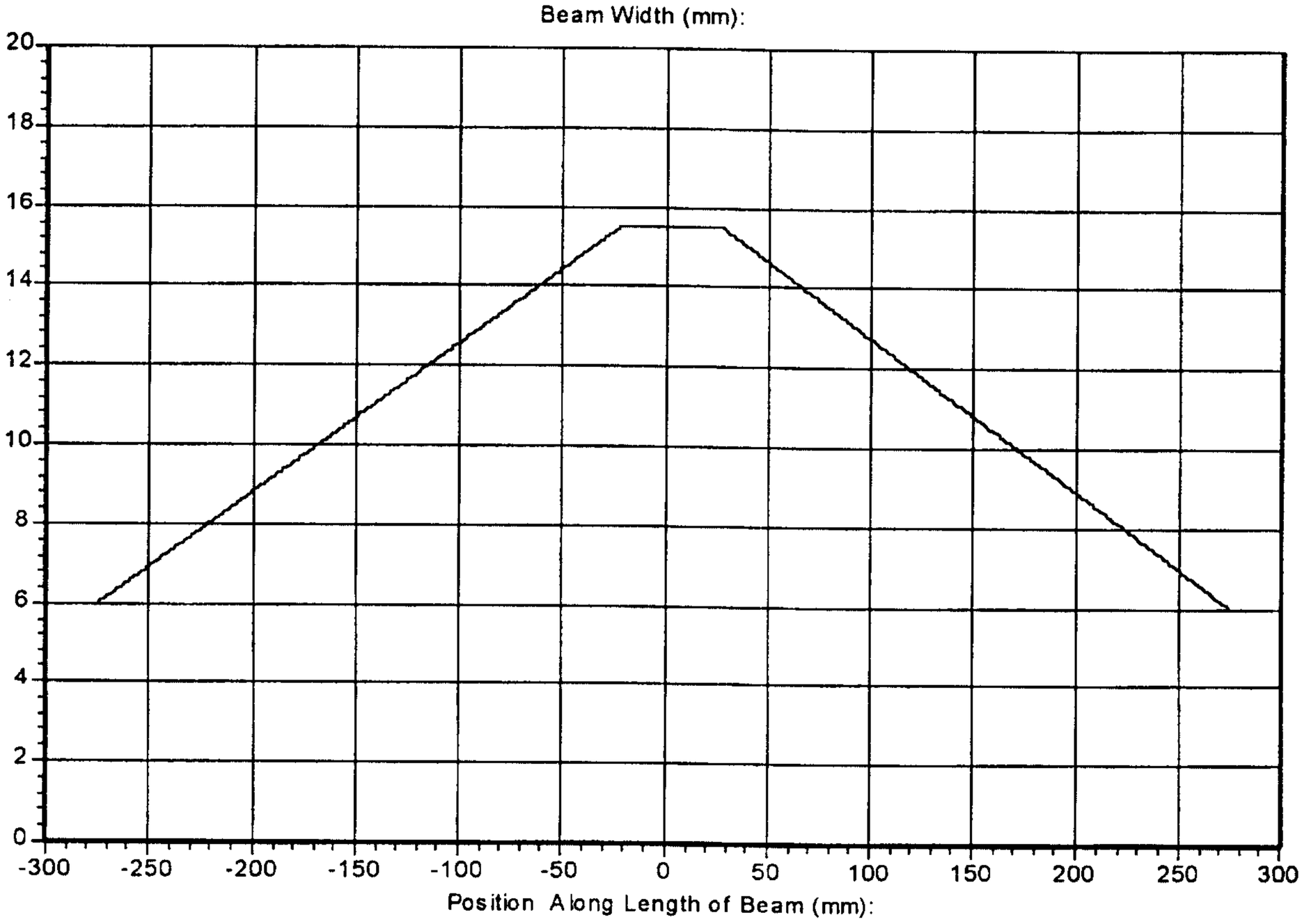
Beam Width (mm):
20
18
16
14
12
10
8
6
4
2
0
-300
-250
-200
-150
-100
-50
0
50
100
150
200
250
300
Position Along Length of Beam (mm):

FIGURE 3

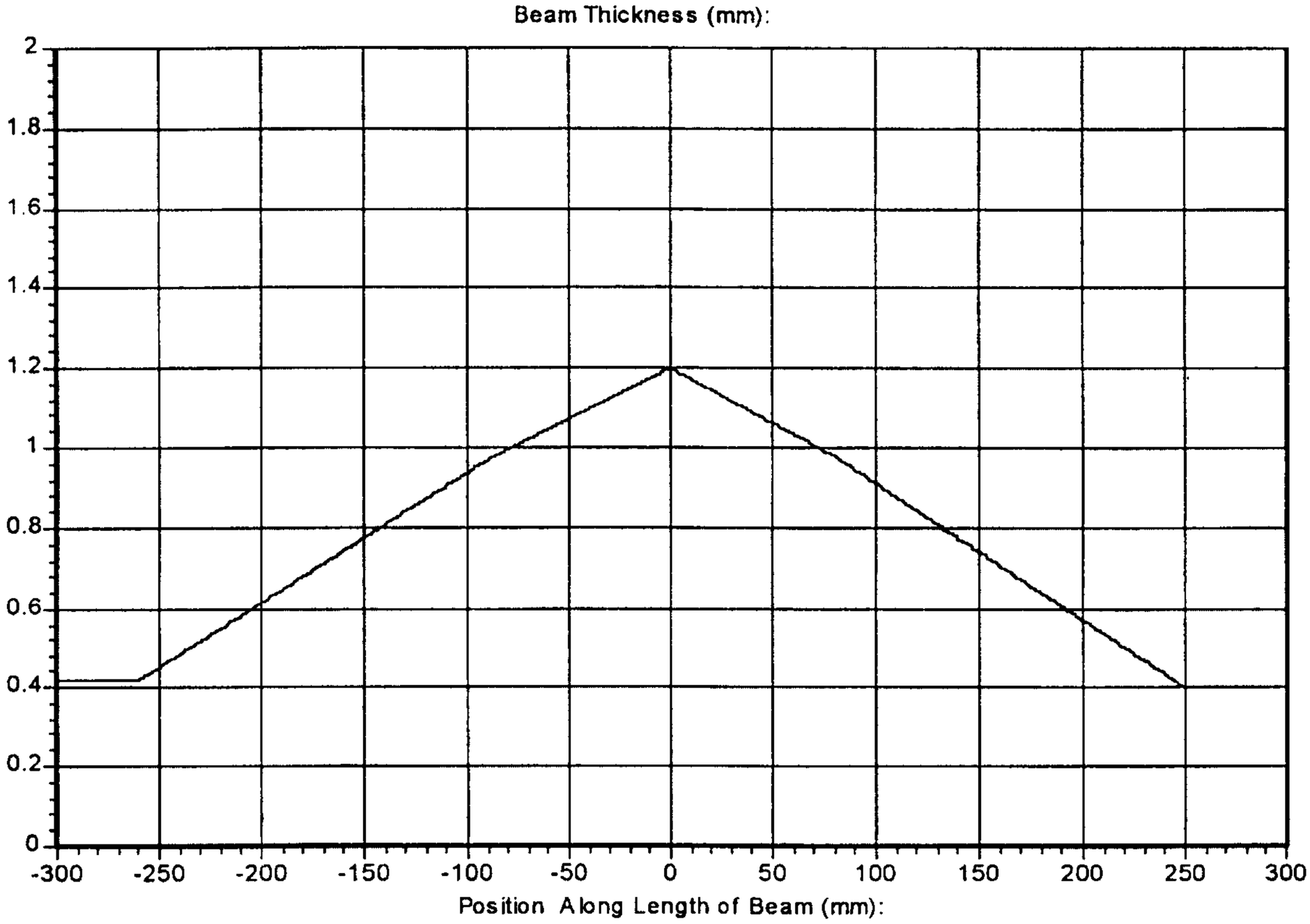
Beam Thickness (mm):
2
1.8
1.6
1.4
1.2
1
0.8
0.6
0.4
0.2
0
-300
-250
-200
-150
-100
-50
0
50
100
150
200
250
300
Position Along Length of Beam (mm):

FIGURE 4

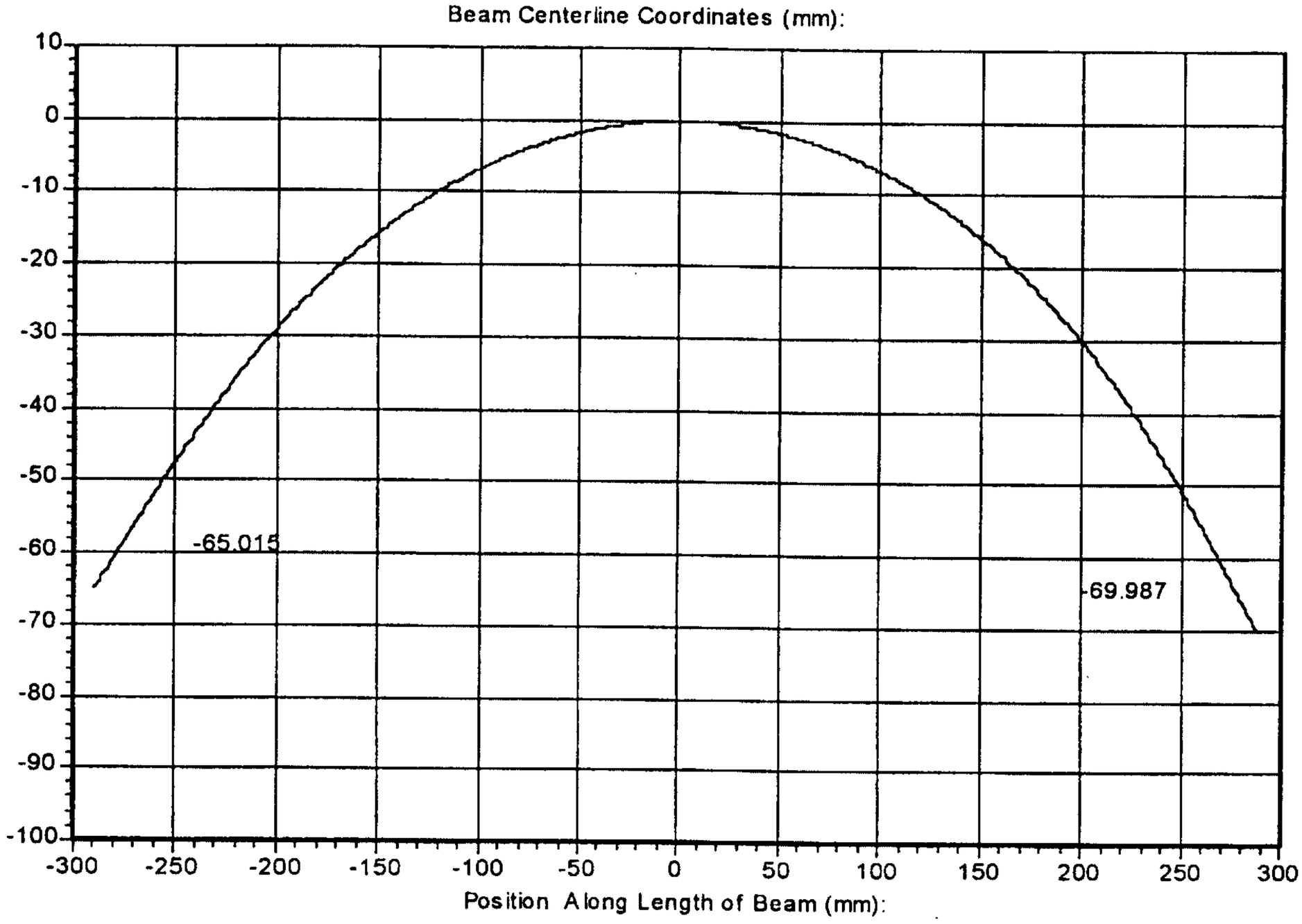
Beam Centerline Coordinates (mm):
10
0
-10
-20
-30
-40
-50
-60
-70
-80
-90
-100
-65.015
-69.987
-300
-250
-200
-150
-100
-50
0
50
100
150
200
250
300
Position Along Length of Beam (mm):

FIGURE 5

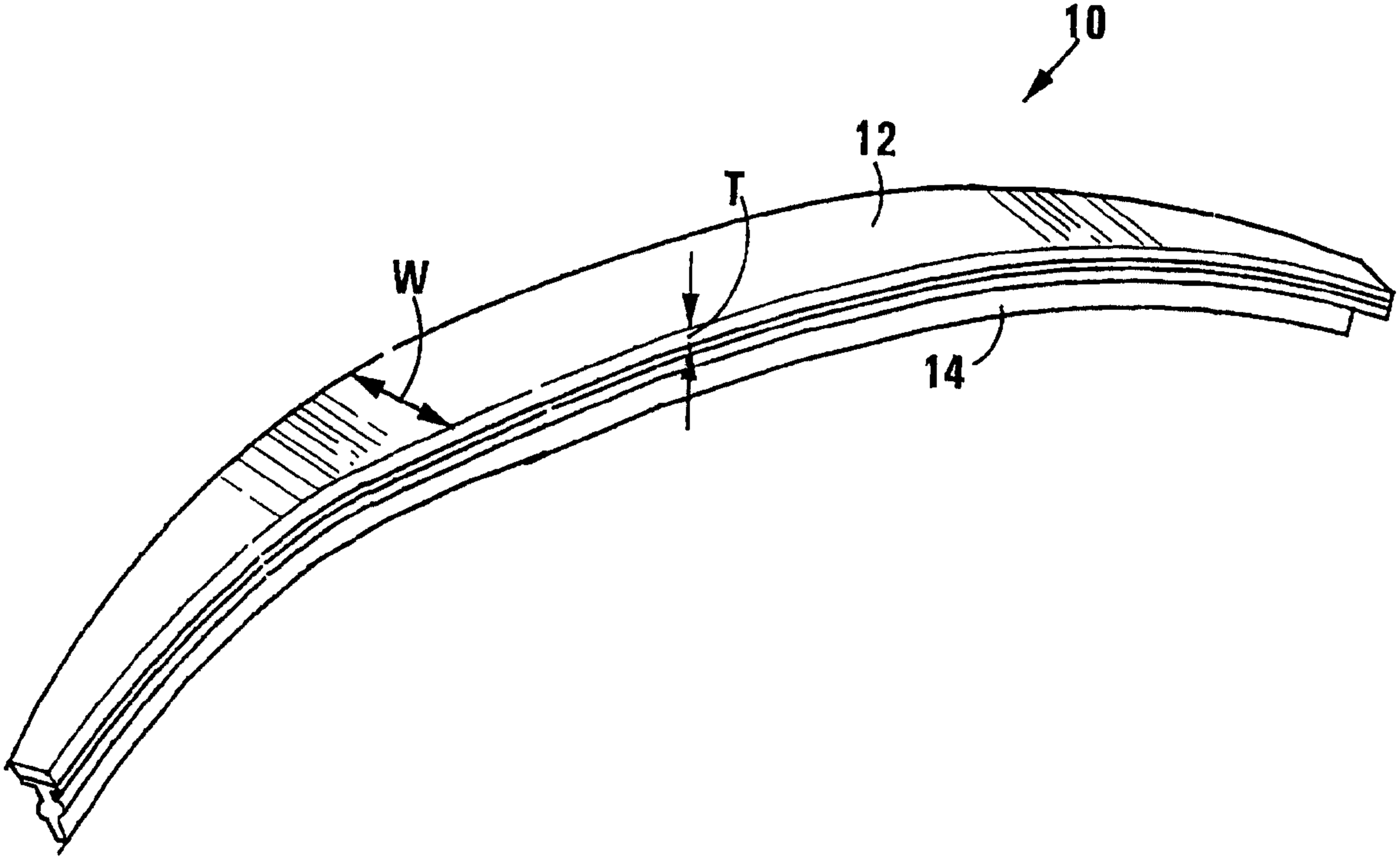
10
12
T
W
14